West Basin Facility Plan Project 7054

TECHNICAL MEMORANDUM 9

Rock Creek Hydraulic Capacity Analysis

FINAL / September 2025

Produced by: carollo

Clean Water Services

Contents

TM 9 - ROCK CREEK HYDRAULIC CAPACITY ANALYSIS

9.1 Introduction 9-1
9.2 Approach 9-1
9.2.1 Model Setup 9-1
9.2.2 Assumptions and Analysis 9-1
9.3 Results 9-4
9.3.1 Headworks/Primary Clarifiers 9-8
9.3.2 Primary Effluent Pump Stations 9-8
9.3.3 Secondary Treatment 9-8
9.3.4 High-Rate Clarification 9-9
9.3.5 East Tertiary Treatment 9-9
9.3.6 Chlorine Contact Basins/Outfalls 9-9
9.4 Review and Conclusions 9-9

Appendices

APPENDIX 9A HYDRAULIC MODEL BINDER

Tables

Table 9.1 Hydraulic Improvements Projects 9-4
Table 9.2 Summary of Critical Locations at 2045 PHF 9-4

Figures

Figure 9.1 Rock Creek 2045 PHF - 217 mgd Plant Hydraulic Profile 9-5
Figure 9.2 Rock Creek 2045 PHF - 217 mgd Plant Hydraulic Profile 9-6
Figure 9.3 Rock Creek Simplified Modeled Flow Schematic 9-7

Abbreviations

AB	aeration basin
CCB	chlorine contact basin
FE	final effluent
FOF	filter overflow
HRC	high rate clarifier
mgd	million gallons per day
PC	primary clarifier
PEPS	primary effluent pump station
PHF	peak hour flow
RAS	return activated sludge
SC	secondary clarifier
TOW	top of wall
VH	Visual Hydraulics
WRRF	water resource recovery facility
WSE	water surface elevation

TM 9 ROCK CREEK HYDRAULIC CAPACITY ANALYSIS

9.1 Introduction

This document presents the results of hydraulic modeling conducted to evaluate the ability of the Rock Creek Water Resource Recovery Facility (WRRF) to convey projected peak flows through the facility through the 2045 planning horizon. The analysis incorporates planned additional structures and assesses whether any hydraulic limitations emerge that would necessitate additional projects as part of the West Basin Master Planning effort.

Hydraulic models were developed using Visual Hydraulics (VH), a software platform designed specifically for simulating pressurized and gravity flow through wastewater treatment facilities. The modeled flow path was based on record drawings from the original facility and subsequent improvement projects through 2025, including the recently completed Primary Clarifier No. 4 project. Key drawings used to establish the hydraulic characteristics of the modeled flow components have been marked up and compiled into Appendix 9A to support the assumptions and model inputs documented in this report.

9.2 Approach

9.2.1 Model Setup

The VH model was set up to apply the Darcey-Weisbach/Colebrook-White equations for pressurized pipe flow scenarios and Mannings equation for open channel and gravity pipe flow scenarios with default roughness coefficients of 0.004 and 0.013 applied, respectively, assuming cement-mortar lined piping and concrete channels.

9.2.2 Assumptions and Analysis

To assess potential hydraulic limitations within the planning period, the model was run at the projected 2045 peak hour flow (PHF) of 217 million gallons per day (mgd), assuming a PHF from the collection system of 201 mgd, 10.3 mgd of combined transfer flow from the Hillsboro and Forest Grove WRRFs and 5.9 mgd of internal recycle flow. This is consistent with modified flow projections documented in the West Basin Flow and Loads memorandum[1] and PHF assumptions used in the Rock Creek process capacity evaluation[2].

[1] Jacobs (2022-02-08). Flow and Load Projections. Memorandum. West Basin Master Planning Preliminary Work.
[2] Carollo Engineers, Inc., (April 2025). TM 2 - Rock Creek WRRF Capacity Evaluation. West Basin Facility Plan Project 7054.

The additional aeration basins (AB), secondary clarifiers (SC), tertiary filters and chlorine contact basin (CCB), required within the planning period, based on the findings documented in the process capacity analysis and the secondary[3] and tertiary treatment[4] evaluations, were assumed to be constructed and in service. Their weirs and walls were assumed to be set to elevations similar to those of existing adjacent structures.

The hydraulic profile was used to assess potential hydraulic limitations at PHF conditions (Figures 9.1 and 9.2). Processes were considered hydraulically "at risk" if the distance between a weir crest and downstream water surface elevation (WSE) was less than 6 inches, or if the WSE was within 18 inches of the adjacent top-of-wall (TOW) elevation. No redundancy criteria were applied in this evaluation; all available process equipment, basins, and channels were assumed to be operational during PHF conditions.

9.2.2.1 Flood Stage Assumption

The Tualatin River was assumed to be at a 100-year flood stage of 147.0 feet, as determined by the current Federal Emergency Management Agency Flood Insurance Rate Map database (Appendix 9A). Note that this is approximately 3 feet higher than the 100-year flood value used historically (143.6 feet).

9.2.2.2 Flow Distribution Assumptions

Flow from the screening channels in the headworks was split based on hydraulic conditions, with the new Primary Clarifier 4 in operation. Flows to the east and west secondary treatment trains were defined by the maximum surface overflow rates of the secondary clarifiers, as adopted from the Rock Creek capacity evaluation[5], with any excess flow bypassing through the 60-inch or 72-inch primary effluent bypass lines on the west and east sides, respectively.

West Secondary Treatment Train

No additional aeration basins were assumed on the west side, and secondary clarifiers 5 and 6 were assumed not to be in service, resulting in a total west-side secondary flow of 32 mgd. Return activated sludge (RAS) was introduced into the model in zone 1 of the aeration basins at a flowrate equal to 60 percent of the influent flow to the basin. No additional pumping capacity was required at the west primary effluent pump station (PEPS) to accommodate this flow.

East Secondary Treatment Train

Two additional aeration basins (ABs 8 and 9) and two secondary clarifiers (SCs 11 and 12) were included on the east side, resulting in a total east-side secondary flow of 128 mgd. The existing east PEPS has a documented capacity of 104 mgd, so an expansion of this station will be required to accommodate the additional flow. The east secondary treatment train was assumed to operate with independent aeration

[3] Carollo Engineers, Inc., (March 2023). TM 4 - Rock Creek Secondary Treatment Expansion. West Basin Facility Plan Project 7054.
[4] Carollo Engineers, Inc., (November 2024). TM 5 - Rock Creek WRRF Tertiary Expansion Evaluation. West Basin Facility Plan Project 7054.
[5] Carollo Engineers, Inc., (April 2025). TM 2 - Rock Creek WRRF Capacity Evaluation. West Basin Facility Plan Project 7054

basin/secondary clarifier pairs, with the aeration basins running in step-feed mode: 33 percent entering in zone 1, 33 percent in zone 6, and 34 percent in zone 8. RAS is returned to zone 1 of each basin. Existing pumps limit RAS to 5 mgd per basin; however, based on results from an ongoing process evaluation by the District, modeling assumed 11.6 mgd RAS per basin.

Secondary Effluent

The modulating weir gate in the west secondary effluent diversion structure was assumed to be fully open, distributing flow to both the high-rate clarifiers (HRC) and CCBs 1 and 2. A portion of the flow to the HRCs was pumped to the tertiary filter inlet channel. However, the full pump station capacity could not be employed without generating backwater conditions in the filter influent and overflow channels. Therefore, the pumped flow was limited to maintain a level in the filter influent channel at 18 inches below the adjacent TOW, and the remaining flow was bypassed from the HRC to CCBs 1 and 2. Instrumentation and equipment to maintain the WSE in the filter influent channel do not currently exist and would be needed for this assumption to be valid. Additional analysis is required to confirm the feasibility of this control approach.

It was assumed that the east tertiary clarifiers were offline, and secondary effluent flowed directly to the filter influent channel. Eight additional filters and CCB4 were included on the east side and the east primary effluent line was rerouted to discharge into CCB4. Filter effluent (FE) and overflow (FOF) piping capacities were expanded by incorporating the 48 by 72-inch cross, installed in the 48-inch FE piping in the Phase 6A project, thereby addressing the hydraulic restriction in the existing 48-inch FE line, identified in the 2014 Facility Plan[6]. At the modeled river stage, there was insufficient driving head between the filter inlet channel and CCBs 3 and 4 to accommodate filtration; therefore, flow bypassed the filters via the existing 42-inch and 48-inch and new 72-inch FOF lines. It was assumed that, with the addition of the eight filters identified in the tertiary expansion evaluation[7], the filter overflow and effluent systems would be expanded.

Table 9.1 lists the hydraulic improvements assumed to accompany capacity-related projects and required to achieve the results presented below. Additional minor assumptions are included in the reference material provided in Appendix 9A.

[6] Carollo Engineers, Inc., (October 2012). TM 3.2 - Rock Creek Facilities Plan Update - Capacity Evaluation, West Basin Facilities Plan.
[7] Carollo Engineers, Inc., (November 2024). TM 5 - Rock Creek WRRF Tertiary Expansion Evaluation, West Basin Facility Plan Project 7054.

Table 9.1 Hydraulic Improvements Projects

Hydraulic Improvement	Process Area	Trigger (capacity-related project)
Expand east PEPS capacity from 104 mgd to 128 mgd	East PEPS	East Secondary Expansion (+Abs 8-9, SCs 11-12)(1)
Increase tertiary filter overflow weir length	East Filters	Tertiary Expansion 1 and 2 (+Filters 15-18; +Filters 19-22)(2)
Integrate existing 48 x 72 cross into FE/FOF system	East Filters	Tertiary Expansion 1(2)
Construct CCB4	CCB 4	Disinfection Expansion(3)
Reroute east PE line to discharge into CCB4	CCB 4	Disinfection Expansion(3)
Install level instrumentation and SCADA control to maintain WSE ~18 inches below TOW	East Filters/HRC Effluent Pump Station	N/A

Notes:
(1) TM 4 (Carollo, March 2023).
(2) TM 5 (Carollo, November 2024).
(3) TM 2 (Carollo, April 2025).

9.3 Results

A hydraulic profile showing the modeled WSE through the facility at the 2045 PHF is provided in Figures 9.1 and 9.2. Figure 9.3 presents a schematic of the modeled flow path, along with summarized assumptions and flow splits. Critical locations identified by the model are listed in Table 9.2.

Table 9.2 Summary of Critical Locations at 2045 PHF

Unit Process	Location	Status	Freeboard/Distance to Submergence (inches)	Weir/Wall Elevation (feet)	Modeled WSE (feet)
Primary Clarifiers	PC 1,2, and 3 effluent weirs	Submerged	-31.1	163	165.59
Primary Clarifiers	PC 1, 2, and 3 walls	At Risk	4.9	166	165.59
Primary Clarifiers	PC 4 effluent weir	Submerged	-4.7	163	163.39
Primary Clarifiers	Effluent box - PC 1 and 2	At Risk	12.8	166	164.93
East Secondary	AB effluent weir	At Risk	1.8	158.67	158.52
West Secondary	SC influent distribution box	At Risk	16.3	158.5	157.14
West Secondary	SC influent distribution box weirs	Partially Submerged	0.0	156	156.00
West Secondary	SC effluent weirs	At Risk	2.6	154.8	154.58
HRC	Effluent pump station	At Risk	12.4	150(1)	148.97
Tertiary Filters	Filter influent channel	At Risk	17.5	152	150.54
CCB 1 and 2	Exterior walls	At Risk	6.1	149.0	148.49
CCB 1 and 2	Weir walls	Overflowing	-8.3	147.8	148.49
Outfall	Outfall diversion structure	At Risk	6.2	149.0	148.48

Notes:
(1) Elevation of the bottom of the slab in the HRC pump station.
PC - primary clarifier.

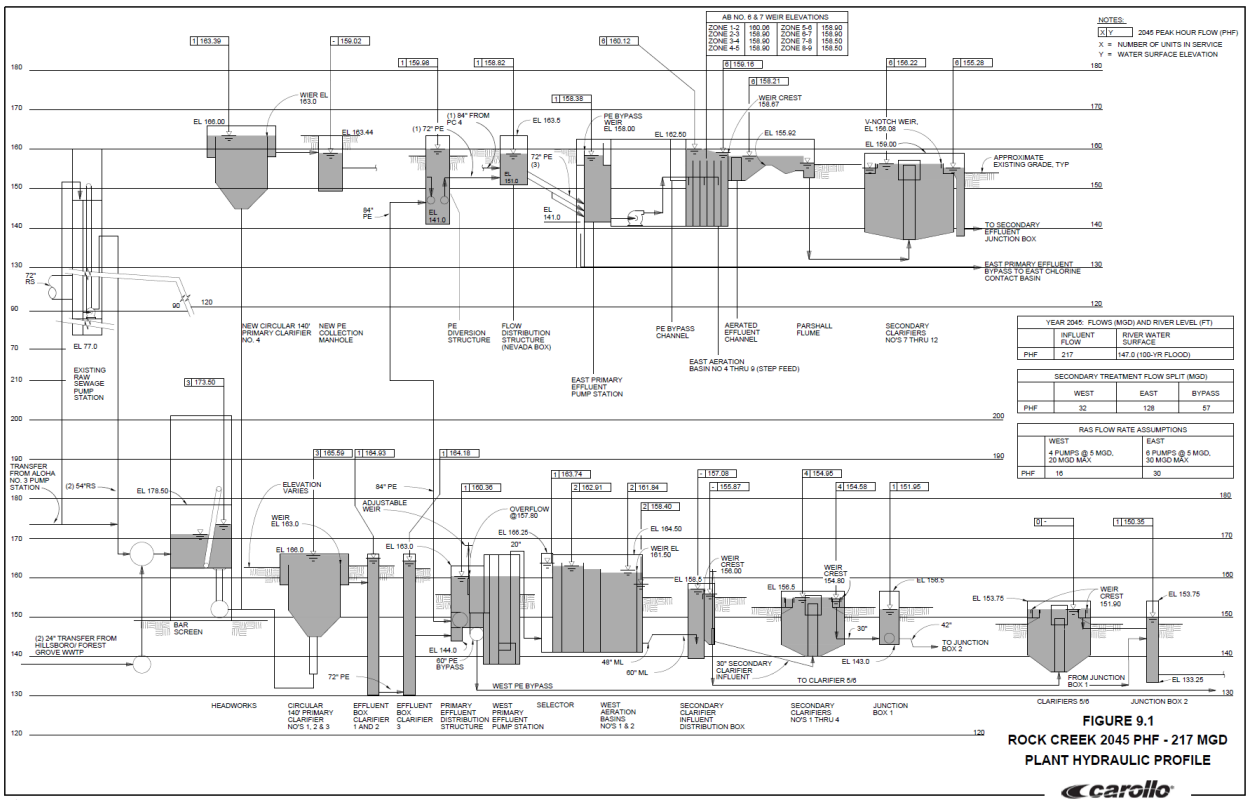

Fig 9.1.pdf

Figure 9.1 Rock Creek 2045 PHF - 217 mgd Plant Hydraulic Profile

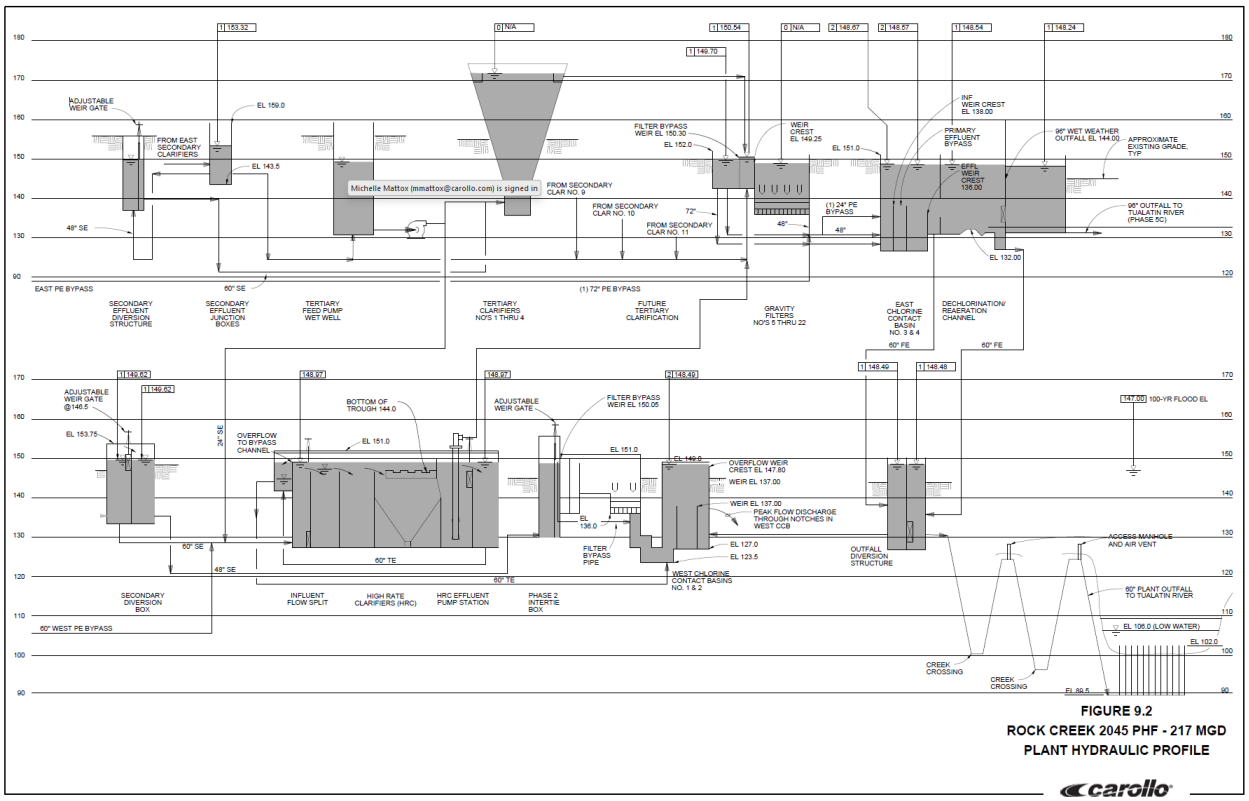

Fig 9.2.pdf

Figure 9.2 Rock Creek 2045 PHF - 217 mgd Plant Hydraulic Profile

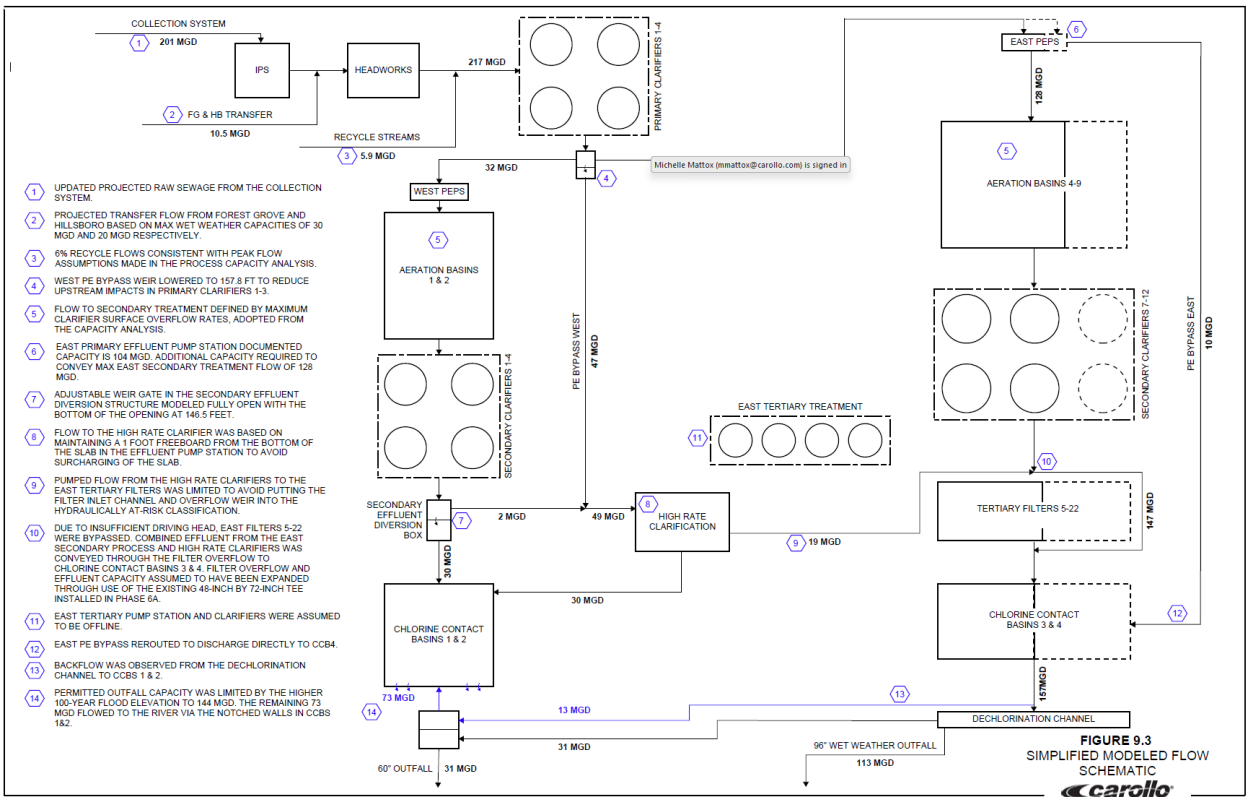

Fig_9.3.pdf

Figure 9.3 Rock Creek Simplified Modeled Flow Schematic

9.3.1 Headworks/Primary Clarifiers

Under modeled conditions, with three screens online, 72 inches of freeboard was observed in the headworks screening channels, indicating ample hydraulic capacity at the 2045 PHF. Flow was distributed from the primary influent header to the four primary clarifiers, all of which had submerged weirs under modeled conditions. The weir of clarifier 4 was submerged by 4.7 inches, with 31 inches of freeboard remaining to the top of wall, while those of clarifiers 1 through 3 were submerged by 31 inches, leaving only 4.9 inches of the top of the clarifier walls. The primary effluent manhole receiving flow from clarifiers 1 and 2 was observed to be at risk, with 12.8 inches of freeboard to the manhole rim.

9.3.2 Primary Effluent Pump Stations

9.3.2.1 West Primary Effluent Pump Station

Effluent from primary clarifiers 1-3 enters the primary effluent distribution structure. The existing west PEPS has the capacity to convey the maximum flow of 32 mgd to the west secondary treatment process. The bypass weir was lowered to an elevation of 157.8 feet to allow 47 mgd to bypass to the 60-inch bypass line. The remaining 84 mgd flows to the east primary effluent pump station, combining with the effluent from primary clarifier 4 in the flow distribution structure known as the Nevada Box.

9.3.2.2 East Primary Effluent Pump Station

The east primary effluent pump station, with a documented total capacity of 104 mgd, will require additional pumping capacity to match the maximum flow that can be treated by the east secondary process of 128 mgd. A flow rate of 10 mgd was bypassed to the 72-inch bypass line on the east side.

9.3.3 Secondary Treatment

9.3.3.1 West Secondary Treatment

A freeboard of 18.6 inches was maintained in the west aeration basins, with 34.3 inches of freeboard on the effluent weirs. The secondary clarifier influent distribution structure was operating with weirs in a partially submerged condition, with only 16.3 inches of freeboard to the TOW. The effluent weirs on the west secondary clarifiers were also at risk, with 2.6 inches of freeboard.

9.3.3.2 East Secondary Treatment

A freeboard of 24.7 inches was maintained to the TOW through the aeration basins on the east side. The effluent weirs on the east aeration basins were observed to be just within the at-risk criteria, with 1.8 inches of freeboard to the downstream channel. About 12 inches of freeboard was maintained on the effluent weirs of the east secondary clarifiers.

9.3.4 High-Rate Clarification

The secondary effluent diversion structure was modeled with the modulating weir gate fully open, allowing 30 mgd to flow directly to CCBs 1 and 2, and 2 mgd to the HRCs. This 2 mgd combined with the 47 mgd of bypass flow, resulting in a total of 49 mgd entering the HRCs.

Of this 49 mgd, only 19 mgd was pumped to the east filter inlet channel. Pumping beyond this capacity would put the filter influent channel and overflow weirs in the at-risk category, so the remaining 30 mgd was bypassed to CCBs 1 and 2. Additionally, bypassing more than 47 mgd of primary effluent on the west side would reduce freeboard in the HRC effluent pump station to less than 12 inches from the bottom of the slab.

9.3.5 East Tertiary Treatment

There was insufficient driving head to pass flow through the granular media filters. As a result, the combined east secondary and HRC effluent flow of 147 mgd was modeled bypassing over the filter overflow weir. The WSE in the filter influent channel was just within the at-risk criteria with 17.5 inches of freeboard to the adjacent TOW. The hydraulic bottleneck identified in previous facility plans was alleviated with the incorporation of the 48 by 72-inch cross in the FE line from the Phase 6A project. This modification allowed for a majority of the flow (112 mgd) to flow through the 72-inch line to CCB4.

9.3.6 Chlorine Contact Basins/Outfalls

A total of 157 mgd was modeled flowing through CCBs 3 and 4, submerging both the influent and effluent weirs; however, 28 inches of freeboard was maintained to the basin TOW. The high river stage resulted in submergence of the wet-weather outfall overflow weir. Flows were balanced between the 96-inch wet-weather and original 60-inch outfalls. With the existing flush gate open at the wet-weather outfall box, 113 mgd was discharged through the 96-inch outfall, and 31 mgd was discharged through the 60-inch outfall. The outfall diversion structure was observed to be at risk with 6.2 inches of freeboard to the TOW.

With the hydraulic grade line in the dechlorination channel at 148.5 feet, approximately 8 inches higher than the elevation of the overflow weir walls in CCBs 1 and 2, the remaining 13 mgd backflowed from the dechlorination channel through the 60-inch FE line, returning via the outfall diversion structure to CCBs 1 and 2. Combined with the 60 mgd from the secondary effluent diversion structure and the HRC bypass, this resulted in a total overflow of 73 mgd over the notched walls.

9.4 Review and Conclusions

The VH model was run at the projected 2045 PHF of 217 mgd, comprising 201 mgd from the collection system, 10.3 mgd of transfer flow from Forest Grove and Hillsboro, and 5.9 mgd of internal recycle flow consistent with the flows used in the process capacity analysis. Planned treatment expansions were assumed to be constructed, and all available process units were assumed to be in service.

Conditions observed in Primary Clarifiers 1 through 3 were potentially critical: the modeled WSE in these clarifiers was within 4.9 inches of the TOW, indicating that future hydraulic improvements of the primary effluent piping may be warranted. The west PEPS has sufficient capacity to convey the maximum treatable flow to the west secondary process; however, the east PEPS will require at least 24 mgd of additional capacity to match the treatment capacity of the east secondary process of 128 mgd.

Three locations within the secondary treatment trains, specifically the east aeration basin effluent weirs, the west secondary influent distribution structure and splitter weirs, and west secondary clarifier effluent weirs, were classified as hydraulically at-risk. These conditions were not considered seriously limiting due to the available bypass capacity around the secondary processes.

The increased 100-year flood elevation had a significant impact on the tertiary treatment and disinfection processes, exposing hydraulic constraints in the HRCs and tertiary filters. Bypass flow on the west side was limited to 47 mgd by setting the bypass weir in the primary effluent distribution structure to 157.8 feet, to reduce the risk of surcharging the slab in the HRC effluent pump station. This could also be achieved by lowering the bypass weir in the east PEPS to allow more passive overflow to the east primary effluent bypass.

To avoid backwater in the filter influent and overflow channels, HRC effluent was limited to 19 mgd through the effluent pump station; the remainder bypassed to CCBs 1 and 2. Instrumentation and equipment to maintain the WSE in the filter influent channel do not currently exist and would be needed for this assumption to be valid. Additional analysis is required to confirm the feasibility of this control approach. Under modeled conditions, the east tertiary filters lacked sufficient driving head, so the combined 147 mgd of secondary and HRC effluent bypassed the filters to CCBs 3 and 4. A 36-inch line stubbed through the wall of the HRC effluent pump station during construction could be used to route additional flow by gravity to CCB 3, shifting more flow to the east train with less impact upstream of the filters.

The higher river stage limited flow through the permitted outfalls to 144 mgd, resulting in 73 mgd overflowing at the notched walls of CCBs 1 and 2. Under these conditions the river surface is essentially at the walls of the CCBs and only about 10 inches below the elevation of the notched walls, so this represents an extreme boundary condition. Importantly, all upstream treatment structures were able to contain peak flow and overflow was localized to these notched walls. If prevention of overflow under these conditions becomes a priority, the installation of effluent pumps in the dechlorination channel could effectively lower the hydraulic grade line to restore normal operating conditions.

APPENDIX 9A

HYDRAULIC MODEL BINDER

ROCK CREEK HYDRAULIC MODEL BINDER

https://cleanwaterservices.sharepoint.com/sites/opermanual/wwtf/rockcreek/overview/Pages/Flow-Schematic.aspx

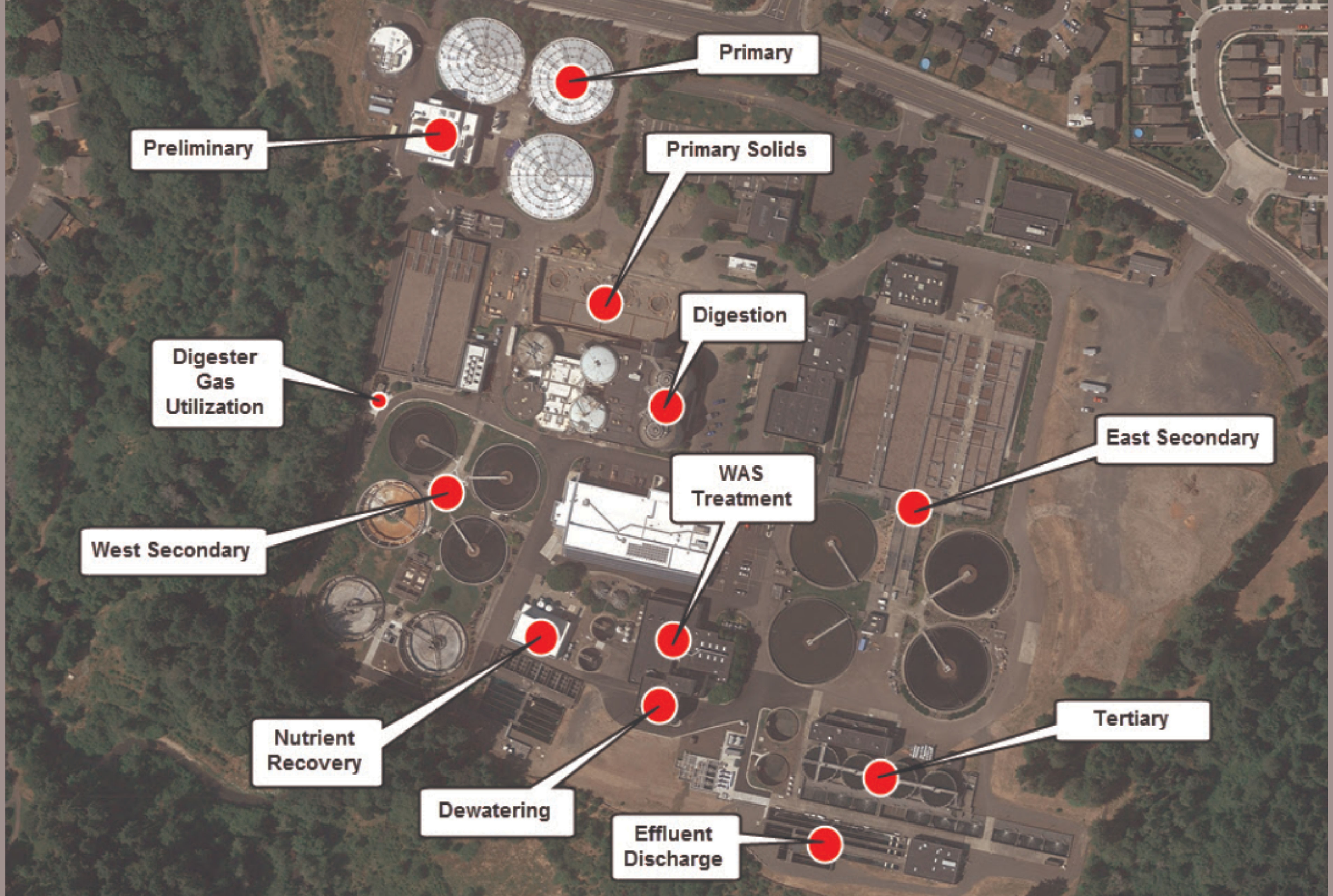
Primary
Preliminary
Primary Solids
Digestion
Digester Gas Utilization
East Secondary
WAS Treatment
West Secondary
Tertiary
Nutrient Recovery
Dewatering
Effluent Discharge

CIVIL YARD PIPING
2011_6392 STORMWATER NPNES PERMIT COMPLIANCE
2012_6381 DIGESTER GRAVITY THICKENER PROJECT
18" METHANE GAS PIPE TO GAS FLARES

LEGEND

SHADING — ORIGINAL CONTRUCTION PHASE

- 1976 CONTRACT 38
- 1979 FIELD MAINTENANCE FAC
- ~~DEMO IN 2014 1981 OPERATIONS BLD MODS~~
- 1985 PRIMARY EXPANSION
- 1987 PHASE 1
- ~~1989 SLUDGE THICKENING FAC~~
- 1990 PHASE 2
- 1990 TERTIARY COMPLEX
- 1991 PHASE 4
- 1996 NITRIFICATION UPGRADE
- 1999 PHASE 5A
- 1999 PHASE 5B
- 1999 PHASE 5C
- 2004 PHASE 6A
- 2008 PHASE 6D
- 2008 EAST AERATION BASIN IMPROVEMENTS
- 2013 ACTIFLO
- ~~2014 GRAVITY THICKENER~~

CONSTRUCTION HISTORY BY FACILITY

100		INFLUENT PUMP STATION	BUILT	1975 CONTRACT 11 (RAW SEWAGE PS)
			MODIFIED	1976 CONTRACT 38, GROUP G
				1991 PHASE 4, 1999 PHASE 5B
				2008 IMPRVS.
				2010 IPS
200		PRELIMINARY TREATMENT (HEADWORKS)	BUILT:	1999 PHASE 5B
		DEGRETTED SLUDGE WET WELL PIPING.	MODIFIED	2005 IPS/HEADWORKS ACCESS PLATFORMS
300		PRIMARY CLAR. NO. 1		
300	# 2	PRIMARY CLAR. NO. 2		
300	# 3	PRIMARY CLAR. NO. 3		
310		PRIMARY CLAR. GALLERY		
320		E PRIM'Y EFFLUENT PS (# 2)	BUILT:	1999 PHASE 5A
330		W PRIMY EFFLUENT PS (# 1)	BUILT:	1976 CONTRACT 38
			MODIFIED	1985 PRIMARY EXPANSION
				1991 PHASE 4
				1996 NITRIFICATION UPGRADE
				1999 PHASE 5B
340	# 5	PRIMARY CLARIFIER NO. 5	BUILT	1985 PRIMARY EXPANSION
			MODIFIED	1999 PHASE 5B
340	# 6	PRIMARY CLARIFIER NO. 6	BUILT	1991 PHASE 4
			MODIFIED	1999 PHASE 5B
400	# 4	EAST AERATION BASIN NO. 4	BUILT:	1987 PHASE 1
400	# 5	EAST AERATION BASIN NO. 5		
400	# 6	EAST AERATION BASIN # 6	BUILT:	1999 PHASE 5A
400	# 7	EAST AERATION BASIN # 7	BUILT:	2008 PN6356
410	# 1	WEST AERATION BASIN # 1	BUILT:	1996 NITRIFICATION UPGRD
410	# 2	WEST AERATION BASIN # 2		
420	# 7	EAST SEC. CLAR. # 7	BUILT	1987 PHASE 1
420	# 8	EAST SEC. CLAR. # 8		
420	# 9	EAST SEC. CLAR. # 9	BUILT	2008 PHASE 5A
420	#10	EAST SEC. CLAR. # 10	BUILT	2008 PHASE 6D
430		W SEC. MIX LIQ'R SPLIT'R BX	BUILT	1976 CONTRACT 38
			MODIFIED	1996 SEC. IMPRVS.
				2004 PHASE 6A
430	# 1	WEST SEC. CLAR. # 1	BUILT:	1976 CONTRACT 38
430	# 2	WEST SEC. CLAR. # 2	MODIFIED	1996 SECONDARY IMPRV.
430	# 3	WEST SEC. CLAR. # 3		2004 PHASE 6A
430	# 4	WEST SEC. CLAR. # 4		
440		EAST BLOWER BLDG. (# 2)	BUILT:	1987 PHASE 1
			MODIFIED	1995 BLOWER MODS
				2007 ARCHIVE ROOM
450		WEST BLOWER BLDG (# 1)	BUILT:	1996 NITRIFICATION UPGRD.
			MODIFIED	2012-MCC-G REPLC.
460		EAST RAS PUMP STAT. (#2)	BUILT:	1987 PHASE 1
			MODIFIED	1999 PHASE 5A
470		WEST RAS PUMP STA. (# 1)	BUILT:	1976 CONTRACT 38
480		S&C BLDG/STRUVITE RECV'Y	MODIFIED	1987 PHASE 1
				1989 SLUDGE THICKEN. FAC
				1991 PHASE 4
				1996 SEC IMPRVS.
				1999 PHASE 5B
				2004 PHASE 6A
				2010- STRUVITE RECOVERY
				2012-MCC-G REPLACEMENT
500		EAST TERTIARY BLDG.	BUILT:	1990 TERTIARY COMPLEX
			MODIFIED	1991 PHASE 4
				1999 PHASE 5B
				2004 PHASE 6A
500	# 1	E TERTIARY CLARICONE # 1	BUILT	1990 TERTIARY COMPLEX
500	# 2	E TERTIARY CLARICONE # 2		
500	# 3	E TERTIARY CLARICONE # 3		
500	# 4	E TERTIARY CLARICONE # 4		
510	# 5	W TERTIARY/SEC. CLAR. # 5	BUILT	1976 CONTRACT 38
510	# 6	W TERTIARY/SEC. CLAR. # 6		
510		W TERTIARY RAPID MIX/FLOC	MODIFIED	1976 CONT 38, 2004 PHASE 6A
520	# 1	WEST FILTER # 1	BUILT	1976 CONTRACT 38
520	# 2	WEST FILTER # 2	MODIFIED	1999 PHASE 5B
520	# 3	WEST FILTER # 3		
520	# 4	WEST FILTER # 4		
530	# 1	WEST SURGE BASIN # 1	BUILT	1976 CONTRACT 38
530	# 2	WEST SURGE BASIN # 2	MODIFIED	1989 SLUDGE THICKEN. FAC.
				2004 PH 6A
501		LOWER TERTIARY BLDG.	BUILT	1990 TERTIARY COMPLEX
550	# 5	EAST FILTER # 5		
550	# 6	EAST FILTER # 6		
550	# 7	EAST FILTER # 7		
550	# 8	EAST FILTER # 8		
550	# 9	EAST FILTER # 9		
550	# 10	EAST FILTER # 10		
550	# 11	EAST FILTER # 11	BUILT	2004 PHASE 6A
550	# 12	EAST FILTER # 12		
550	# 13	EAST FILTER # 13		
550	# 14	EAST FILTER # 14		
560	# 3	EAST SURGE BASIN # 3	BUILT	1990 TERTIARY COMPLEX
560	# 4	EAST SURGE BASIN # 4		
590		ACTIFLO	BUILT	2013
650	# 3	EAST DISINFECTION CCB # 3	BUILT	1990 TERTIARY COMPLEX
			MODIFIED	1999 PHASE 5B
660	# 1	WEST DISINFECTION CCB # 1	BUILT	1976 CONTRACT 38
660	# 2	WEST DISINFECTION CCB # 2	MODIFIED	1987 PHASE 1
				1990 PHASE 2
670		DRY WEATHER OUTFALL	BUILT	1990 TERTIARY COMPLEX (OUTFALL DIVERSION)
680		WET WEATHER OUTFALL	BUILT	1999 PHASE 5C
700		THICKENING BLDG.	BUILT	1989 SLUDGE THICKEN. FAC.
			MODIFIED	1991 PHASE 4
				1999 PHASE 5B
710		GAS FLARES	BUILT	1987 PHASE 1
			MODIFIED	1990 TERTIARY COMPLEX
720	0	DIGESTER COMPLEX	BUILT	1976 CONTRACT 38
740	# 1	DIGESTER # 1 (CENTRATE EQUALIZATION TANK)	MODIFIED	1987 PHASE 1
720	# 2	DIGESTER # 2 (THICKENING FEED TANK)		1991 PHASE 4
720	# 3	DIGESTER # 3		1999 PHASE 5B
720	# 4	DIGESTER # 4 (DEWATERING FEED TANK)		2000 PHASE 5D
				2004 PHASE 6A
				2004 PHASE 6C
720	# 5	DIGESTER # 5	BUILT	1991 PHASE 4
720	# 6	DIGESTER # 6	MODIFIED	1999 PHASE 5B
750		DEWATERING BUILDING	BUILT	1991 PHASE 4
			MODIFIED	1999 PHASE 5B
				2000 PHASE 5D
				2004 PHASE 6A
				2004 PHASE 6C
800		CHEMICAL BUILDING	BUILT	1991 PHASE 4
			MODIFIED	1999 PHASE 5B
900		ADMINISTRATION BUILDING	BUILT	1991 PHASE 4
901		OPS. BLDG (DEMO-2014)	BUILT	1976 CONTRACT 38
			MODIFIED	1981 OPS. BLDG. MODS
				1991 PHASE 4
901		GRAVITY THICKENER	BUILT	2014-6629
902		MAINT. BUILDING	BUILT	1976 CONTRACT 38
			MODIFIED	1979 FIELD MAINT. FAC.
				1991 PHASE 4
902		MAINT. BLDG.	REMODEL	2012_6482
970		SEPTAGE RECV'G STA.	BUILT	1996 NITRIFICATION UPGRD.

DRN: CAD	ORIG DATE: 2/6/06				
DSN:	DWG #:				
CHK:	CAD FILE #: RC00CH00.DWG				
APPD:	SCALE: 1"=80'				

THIS BAR IS ONE INCH WHEN DRAWING IS FULL SCALE.

REV #	DATE	DRN	APPD	DESCRIPTION
0	2/13/07	CAD		UPDATED FACILITY NUMBERS

Clean Water Services
Our commitment is clear.
2550 SW Hillsboro Hwy. Hillsboro, Oregon 97123-9379

PROJ NAME: ROCK CREEK FACILITY RECORD DRAWING

SHEET TITLE: CONSTRUCTION HISTORY SITE PLAN

SHEET: OF:
PLOT DATE: 5/7/15
PLC #:
CWS PROJ #:

DWG #: RC00 CH00

LAST UPDATE 05-05-2015

ENGR STAMP:

5/7/2015 9:14 AM W:\TPS\CAD\drawings\Facilities\Rock Creek\RcRecords\CivilAreas\RC00CH00.dwg

ROCK CREEK FLOW DISTRIBUTION (01/08/15)

- RAW SEWAGE
- PRIMARY EFFLUENT
- PRIMARY EFFLUENT DIVERSION
- SECONDARY INF/EFF
- FILTRATION / CCB'S
- PLANT EFFLUENT
- REUSE
- BVIG LINE

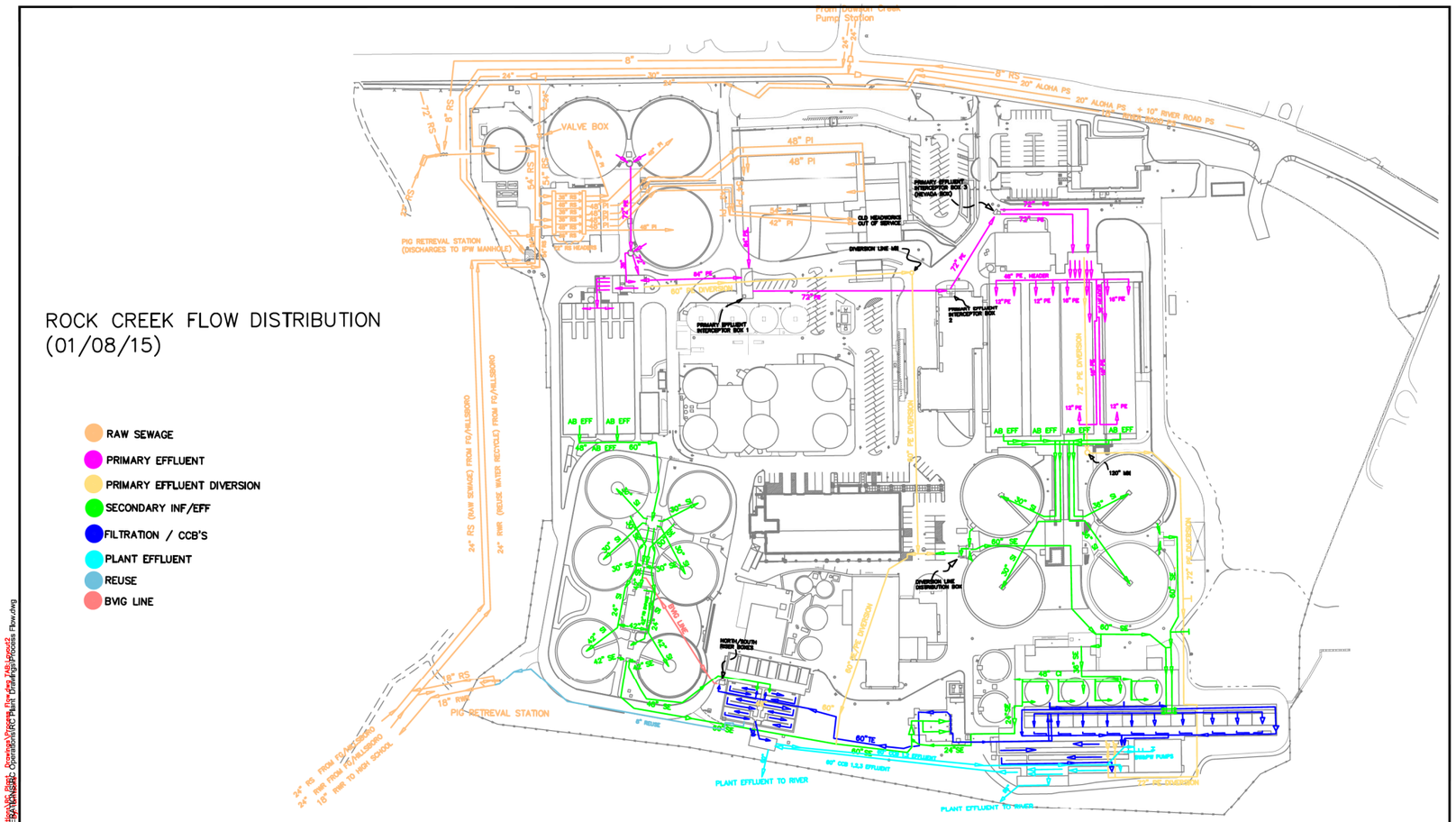

DRN: EL	ORIG DATE: FEB 2012	THIS BAR IS ONE INCH WHEN DRAWING IS FULL SCALE.	REV #	DATE	DRN	APPD	DESCRIPTION
DSN:	DWG #:						
CHK:	CAD FILE #: PROCESS FLOW.DWG						
APPD:	SCALE: NTS						

CleanWater Services
Our commitment is clear.
2550 SW Hillsboro Hwy, Hillsboro, Oregon 97123-9379

PROJ NAME: ROCK CREEK FACILITY RECORD DRAWING

SHEET TITLE: PROCESS
PROCESS FLOW SITE PLAN

SHEET: 1 OF:
PLOT DATE: 1/23/15
PLC #:
CWS PROJ #:

DWG #: G1

LAST UPDATED 01-22-2015

ENGR STAMP:

File: N:\OPERATIONS\Operations\RC Plant Drawings\Process Flow.dwg
Plotted: 1/23/2015 7:47 AM by: Eric Lamoureux
Xrefs: N:\OPERATIONS\Operations\RC Plant Drawings\Process Flow.dwg, 749-Layout2

LEGEND

EQUIPMENT

- FM — FLOW METER
- M — MIXER
- P — PUMP

FLOW CONTROL

- SLUICE OR SLIDE GATE
- WEIR

CHEMICALS

- A — ALUM
- B — BISULFITE
- H — HYPOCHLORITE
- L — LIME
- LPA — LOW PRESSURE AIR
- PO — POLYMER

SAMPLES

- DO — DISSOLVED OXYGEN PROBE
- NH3 — AMMONIA PROBE
- ORP — ORP PROBE
- S1 — RAW SEWAGE (RS)
- S2 — PRIMARY INFLUENT (PI)
- S3 — PRIMARY EFFLUENT (PE)
- S4 — MIXED LIQUOR (ML)
- S5 — SECONDARY EFFLUENT (SE)
- S6 — TERTIARY EFFLUENT (TE)
- S7 — FILTER EFFLUENT (FE)
- S8 — CHLORINE RESIDUAL
- S9 — PLANT EFFLUENT

NOTES:

1. NOT USED.
2. OVERFLOW MANHOLE UPSTREAM OF INFLUENT PUMPING LOCATED NEAR SE CREEK CT AT ELEV 124.00 (ALARMED)
3. OVERFLOW MANHOLE UPSTREAM OF ALOHA NO. 3 PUMP STATION LOCATED ADJACENT TO PUMP STATION AT ELEV 91.00 (ALARMED)
4. FOR DETAILED PROCESS INFORMATION, SEE P&ID'S.
5. SAMPLED MEASURED AT HILLSBORO AND FOREST GROVE.

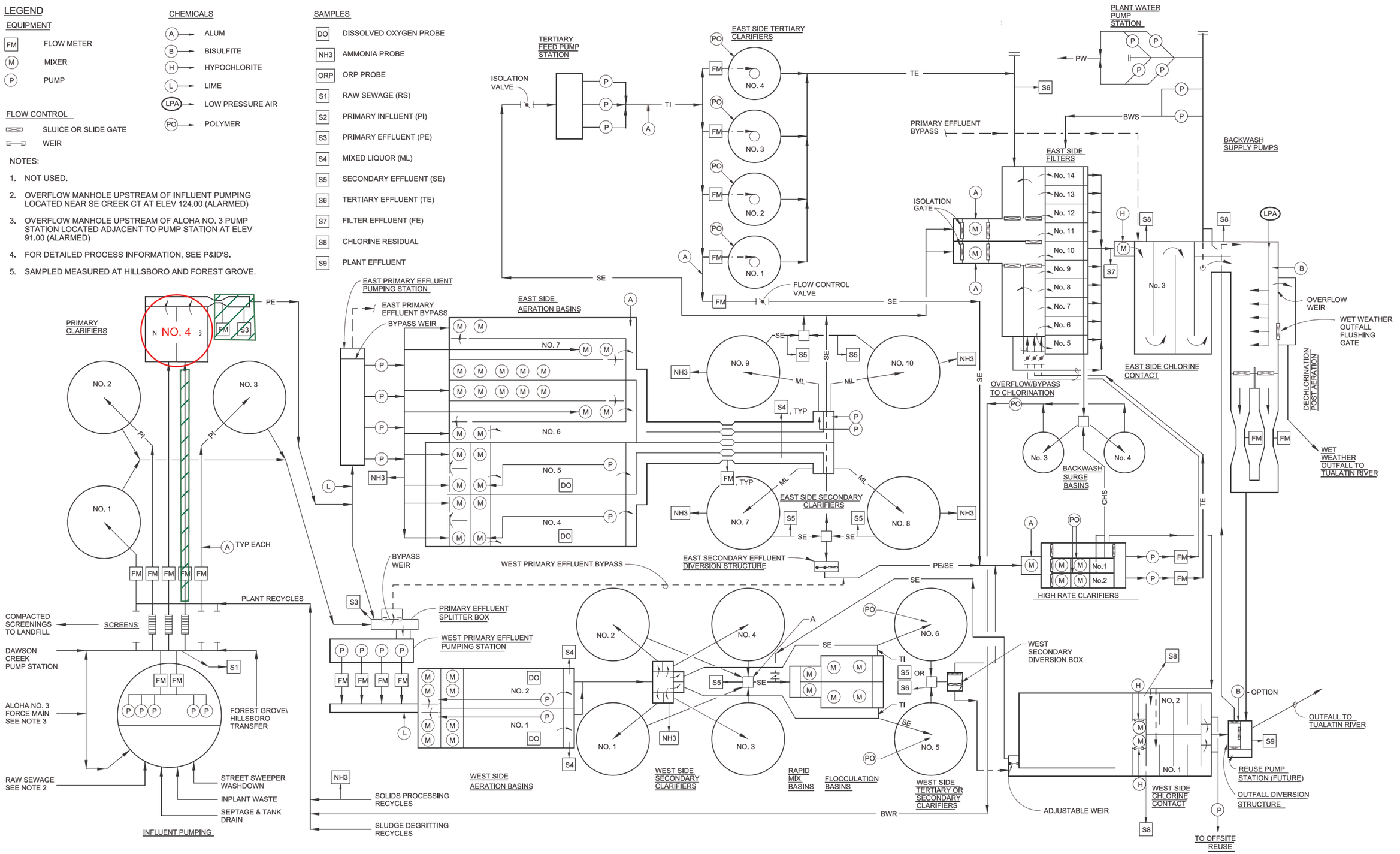

			RECORD DRAWING	DESIGNED CFS	** ORIGINAL STAMPED BY JEFFREY F. McCORMICK FEB 2012 19616PE **	PROJECT ENGINEER		carollo	CLEAN WATER SERVICES	VERIFY SCALES BAR IS ONE INCH ON ORIGINAL DRAWING 0 1" IF NOT ONE INCH ON THIS SHEET, ADJUST SCALES ACCORDINGLY	JOB NO. 7182E.12
				DRAWN MJG					TERTIARY TREATMENT PROJECT		DRAWING NO. G-8
				CHECKED JFM					GENERAL PROCESS FLOW DIAGRAM		SHEET NO. 8 OF 144
REV	DATE	BY	DESCRIPTION	DATE FEB 2014							

PROJECT NO. 7182E12 FILE NAME: 7182E12-216-G-008.dgn

LAST SAVED BY: mgabel Model: Layout1 ColorTable: gshade.ctb DesignScript: Carollo_Std_Pen_v0905.pen PlotScale: 2:1 User: MGabel Plot Date: 12-MAR-2014 2:06:14 PM

LEGEND

EQUIPMENT

- FM — FLOW METER
- M — MIXER
- P — PUMP

FLOW CONTROL

- SLUICE OR SLIDE GATE
- WEIR

CHEMICALS

- A — ALUM
- B — BISULFITE
- H — HYPOCHLORITE
- L — LIME
- LPA — LOW PRESSURE AIR
- P — POLYMER

SAMPLES

- DO — DISSOLVED OXYGEN PROBE
- NH3 — AMMONIA PROBE
- ORP — ORP PROBE
- S1 — RAW SEWAGE (RS)
- S2 — PRIMARY INFLUENT (PI)
- S3 — PRIMARY EFFLUENT (PE)
- S4 — MIXED LIQUOR (ML)
- S5 — SECONDARY EFFLUENT (SE)
- S6 — TERTIARY EFFLUENT (TE)
- S7 — FILTER EFFLUENT (FE)
- S8 — CHLORINE RESIDUAL
- S9 — PLANT EFFLUENT

NOTES:

1. SCREENS AND PRIMARY CLARIFIERS 1, 2, & 3 WERE CONSTRUCTED IN PHASE 5B CONTRACT.
2. OVERFLOW MANHOLE UPSTREAM OF INFLUENT PUMPING LOCATED NEAR SE CREEK CT AT ELEV 124.00 (ALARMED)
3. OVERFLOW MANHOLE UPSTREAM OF ALOHA NO. 3 PUMP STATION LOCATED ADJACENT TO PUMP STATION AT ELEV 91.00 (ALARMED)
4. FOR DETAILED PROCESS INFORMATION, SEE P&ID'S.
5. SAMPLED MEASURED AT HILLSBORO AND FOREST GROVE.

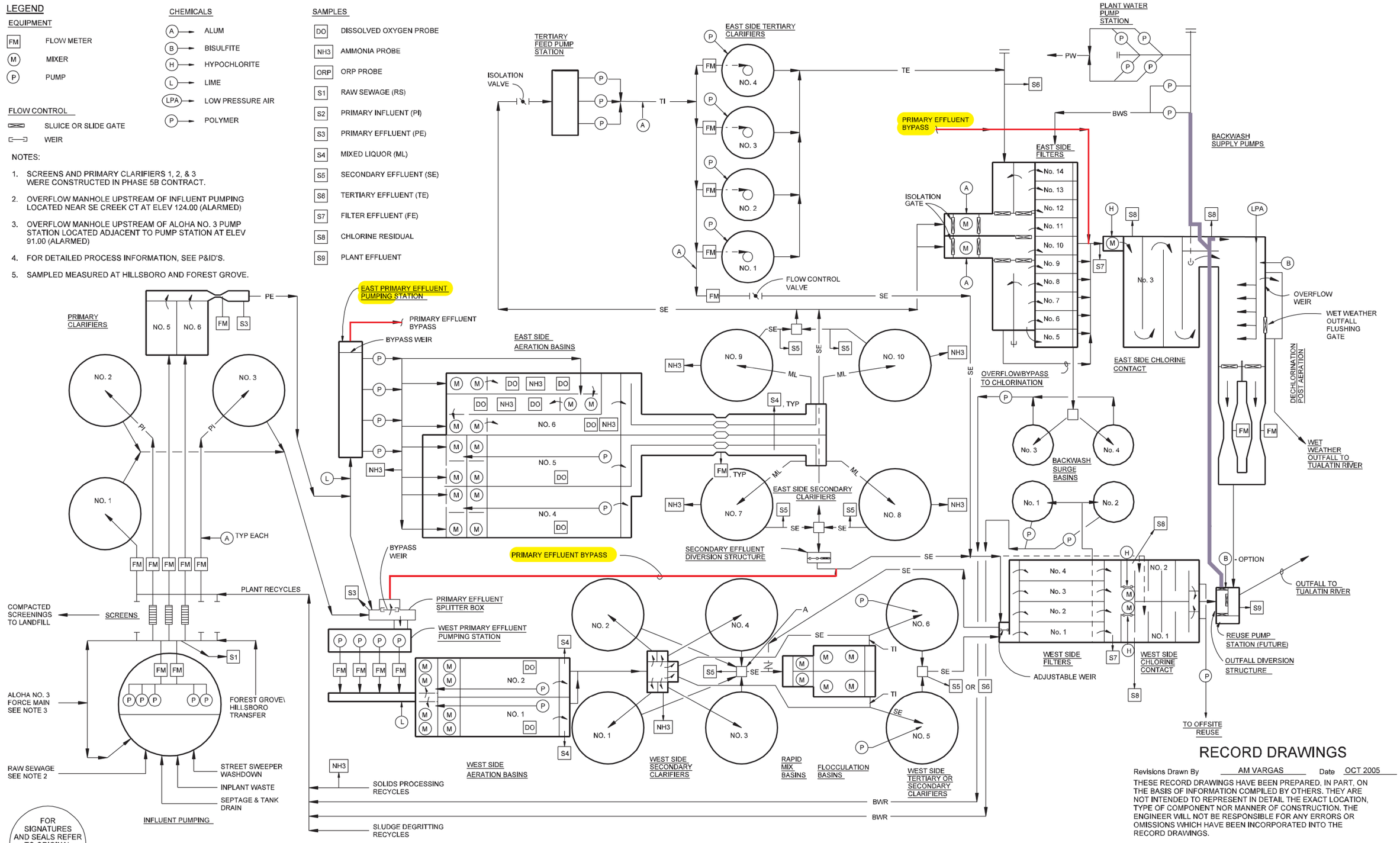

FOR SIGNATURES AND SEALS REFER TO ORIGINAL DRAWINGS DATED OCTOBER 2003

RECORD DRAWINGS

Revisions Drawn By AM VARGAS Date OCT 2005

THESE RECORD DRAWINGS HAVE BEEN PREPARED, IN PART, ON THE BASIS OF INFORMATION COMPILED BY OTHERS. THEY ARE NOT INTENDED TO REPRESENT IN DETAIL THE EXACT LOCATION, TYPE OF COMPONENT NOR MANNER OF CONSTRUCTION. THE ENGINEER WILL NOT BE RESPONSIBLE FOR ANY ERRORS OR OMISSIONS WHICH HAVE BEEN INCORPORATED INTO THE RECORD DRAWINGS.

DSGN	J MCCORMICK				
DR	BD ROUSH				
CHK	KG CLEGG				
APVD	JE GRIFFITHS				

NO.	DATE	REVISION	BY	APVD
	10/05	RECORD DRAWINGS	AMV	LJP

VERIFY SCALE
BAR IS ONE INCH ON ORIGINAL DRAWING.
0 1"
IF NOT ONE INCH ON THIS SHEET, ADJUST SCALES ACCORDINGLY.

CH2MHILL

ROCK CREEK FACILITY
PHASE 6A
EXPANSION AND UPGRADES
CLEAN WATER SERVICES
WASHINGTON COUNTY, OREGON

GENERAL
LIQUIDS PROCESS SCHEMATIC
TOTAL PLANT

SHEET	19
DWG	601-G-20
DATE	MARCH 2004
PROJ	173962.CD

FILENAME: r601g020.dgn PLOT DATE: 05-OCT-2005 PLOT TIME: 13:53:23

©CH2M HILL
THIS DOCUMENT AND THE IDEAS AND DESIGNS INCORPORATED HEREIN, AS AN INSTRUMENT OF PROFESSIONAL SERVICE, IS THE PROPERTY OF CH2M HILL AND IS NOT TO BE USED, IN WHOLE OR IN PART, FOR ANY OTHER PROJECT WITHOUT THE WRITTEN AUTHORIZATION OF CH2MHILL.
REUSE OF DOCUMENTS:

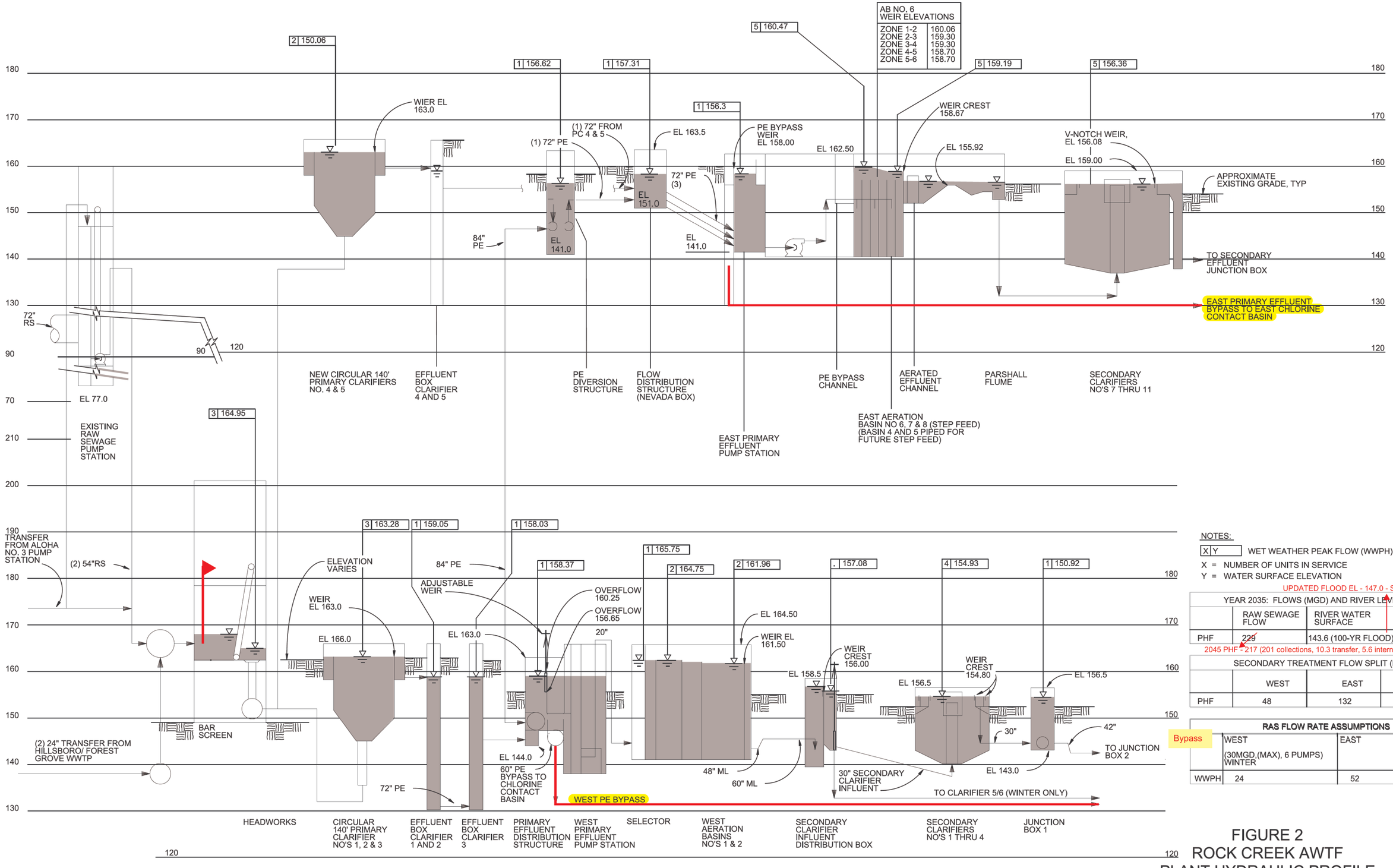

NOTES:

X|Y WET WEATHER PEAK FLOW (WWPH)

X = NUMBER OF UNITS IN SERVICE

Y = WATER SURFACE ELEVATION

UPDATED FLOOD EL - 147.0 - SEE FIRM MAP

YEAR 2035: FLOWS (MGD) AND RIVER LEVEL (FT)		
	RAW SEWAGE FLOW	RIVER WATER SURFACE
PHF	229	143.6 (100-YR FLOOD)

2045 PHF = 217 (201 collections, 10.3 transfer, 5.6 internal recycle)

SECONDARY TREATMENT FLOW SPLIT (MGD)			
	WEST	EAST	BYPASS
PHF	48	132	76

RAS FLOW RATE ASSUMPTIONS		
	WEST (30MGD (MAX), 6 PUMPS) WINTER	EAST
WWPH	24	52

Bypass

FIGURE 2
ROCK CREEK AWTF
PLANT HYDRAULIC PROFILE

carollo

pw:\\PHX-POP-PW.Carollo.local:Carollo\Documents\Client\OR\Clean Water Services\7182A00\Drawings\G\Figure 2a

Constant filter level

1 | 152.87
0 | N/A
1 | 149.94
7 | 149
2 | 147.65
2 | 147.64
1 | 147.55
1 | 147.52
1 | 146.34

ADJUSTABLE WEIR GATE
FROM EAST SECONDARY CLARIFIERS
EL 143.5
48" SE
FROM SECONDARY CLAR NO. 9
FILTER BYPASS WEIR EL 150.30
WEIR CREST EL 149.25
FLOW MEASURING WEIR CREST EL 138.00
PRIMARY EFFLUENT BYPASS
NEW 96" WET WEATHER OUTFALL GATE WEIR CREST EL 132.88
APPROXIMATE EXISTING GRADE, TYP
EFFL WEIR CREST 136.00
EL 132.00
(1) 24" PE BYPASS
48"
48"
96" OUTFALL TO TUALATIN RIVER (PHASE 5C)
(1) 48" FE
EAST PE BYPASS
60" SE
(1) 72" PE BYPASS

SECONDARY EFFLUENT DIVERSION STRUCTURE
SECONDARY EFFLUENT JUNCTION BOXES
TERTIARY FEED PUMP WET WELL
TERTIARY CLARIFIERS NO'S 1 THRU 4
FUTURE TERTIARY CLARIFICATION
GRAVITY FILTERS NO'S 5 THRU 11
EAST CHLORINE CONTACT BASIN NO. 3 & 4
DECHLORINATION/ REAERATION CHANNEL

2 | 152.03
1 | 150.35
1 | 149.78
1 | 149.78
148.0
3 | 146.14
140.5
60" SE
2 | 148.21
1 | 148.06
1 | .

ADJUSTABLE WEIR GATE
EL 153.75
WEIR CREST 151.90
EL 153.75
EL 153.75
24" SE
OVERFLOW TO BYPASS CHANNEL
BOTTOM OF TROUGH 144.0
EL 151.0
ADJUSTABLE WEIR GATE
FILTER BYPASS WEIR EL 150.05
EL 151.0
EL 149.0
OVERFLOW WEIR CREST EL 147.80
FLOW MEASURING WEIR EL 137.00
WEIR EL 137.00
PEAK FLOW DISCHARGE THROUGH NOTCHES IN WEST CCB
EL 136.0
FILTER BYPASS PIPE
EL 127.0
EL 123.5
CONTINUED BELOW
FROM INFLUENT DISTRIBUTION BOX
EL 133.25
42" SEC CLARIFIER INFLUENT
FL 133.0
FROM CLARIFIERS 1 THRU 4
60" SE
48" SE
60" TE
OUTFALL DIVERSION STRUCTURE

SECONDARY CLARIFIERS NO'S 5 & 6
JUNCTION BOX 2
SECONDARY DIVERSION BOX
INFLUENT FLOW SPLIT
HIGH RATE CLARIFIERS (HRC)
HRC EFFLUENT PUMP STATION
PHASE 2 INTERTIE BOX
WEST CHLORINE CONTACT BASINS NO. 1 & 2
ACCESS MANHOLE AND AIR VENT
CONTINUED ABOVE
WEST PE BYPASS
60" PLANT OUTFALL TO TUALATIN RIVER
EL 106.0 (LOW WATER)
EL 102.0
CREEK CROSSING
CREEK CROSSING
EL 89.5

180 170 160 150 140 130 120 90 (left)
180 170 160 150 140 130 120 (right)
170 160 150 140 130 120 110 100 (left)
170 160 150 140 130 120 110 100 90 (right)

FIGURE 2
ROCK CREEK AWTF
PLANT HYDRAULIC PROFILE

From Hydraulix

Manning's *n*

Channel Material	Range
Clean, uncoated cast iron	0.013 - 0.015
Clean, caoted cast iron	0.012 - 0.014
Dirty, tuberculated cast iron	0.015 - 0.035
Riveted steel	0.015 - 0.017
Lock-bar and welded	0.012 - 0.013
Galvanized iron	0.015 - 0.017
Brass and glass	0.009 - 0.013
Wood stave	
Small diameter	0.011 - 0.012
Large Diameter	0.012 - 0.013
Concrete	
With rough joints	0.016 - 0.017
Dry mix, rough forms	0.015 - 0.016
Wet mix, steel forms	0.012 - 0.014
Very smooth, finished	0.011 - 0.012
Vitrified Sewer	0.013 - 0.015
Common-clay drainage tile	0.012 - 0.014
Asbestos	0.011
Planed timber	0.011
Canvas	0.012
Unplanted timber	0.014
Brick	0.016
Rubble masonry	0.017
Smooth earth	0.018
Firm gravel	0.023
Corregated metal pipe	0.022
Natural channels, good condition	0.025
Natural channels with stones and weeds	0.035
Very poor natural channels	0.06

Source: "Civil Engineering Reference Manual", M. Lindeberg, 6th Edition, 1992, p. 5-23

From Hydraulix

Darcy-Weisbach Friction Loss
Absolute Roughness Values ("ε", feet)

Type of Pipe or Surface	Carollo Suggested Design Values for Clean Water	ADDITIONAL REFERENCES								
		"Civil Engineering Reference Manual" M. Lindeberg, 7th Edition, 1999, p. A-27		"Handbook of Hydraulics" Brater & King, 1996, p. 6.12	"Treatment Plant Hydraulics for Environmental Engineers" Benefield, Judkins and Par, 1984, p. 12	"Flow of Fluids Through Valves, Fittings and Pipes" Crane Co., 1982, p. A-23	"Engineering Data Book" Hydraulic Institute, 1990, p. 41	"Common Pipe Flow Values Compared With The Theory of Roughness" Lamont, 1981, p. 277	"Technology Innovation for Determining Surface Roughness in Pipes" Farshad and Rieke, 2005, p. 85	"Internal Flow Systems" D.S. Miller, 1990, p. 190
		Range	Design	Range	Range	Range	Range	Range	Range	Range
STEEL (unlined)										
Welded or seamless (Commercial Steel)	**0.00015**	0.0001 - 0.0003	0.0002	0.00003 -0.02	0.00015	0.00015	0.00015	0.00013	0.00012	0.00008 - 0.004
Corrugated		----	----	0.15 -0.18	----	----	----	----	----	----
MINERAL (unlined)										
Concrete	**0.004**	0.001 - 0.01	0.004	0.00007 -0.003	0.0008 -0.008	0.001 -0.01	0.001 -0.01	0.00042 -0.017	----	0.00008 - 0.0008
IRON (unlined)										
Cast, plain	**0.00085**	0.0004 - 0.002	0.0008	----	0.00085	0.00085	0.00085	0.00083	----	0.0005
Galvanized, plain	**0.0005**	0.0002 - 0.0008	0.0005	----	0.0005	----	0.0005	0.00042	----	0.0005
Wrought, plain	**0.00015**	0.0001 - 0.0003	0.0002	----	0.00015	----	0.00015	0.00017	----	----
MISCELLANEOUS (unlined)										
Copper and brass	**0.000005**	0.000005	0.000005	----	----	----	0.000005	----	----	0.000008
Plastic (PVC, ABS, and FRP)	**0.0001**	----	0.000005	----	0.000007	----	----	0.00013	----	0.000008
LINING										
Bituminous lined	**0.0004**	0.000008	0.000008	----	----	----	0.000005	0.00042	----	----
Centrifugally spun cement mortar lining	**0.0004**	0.000008	0.000008	----	----	----	0.000005	0.00013	0.0001	0.00016 - 0.00033

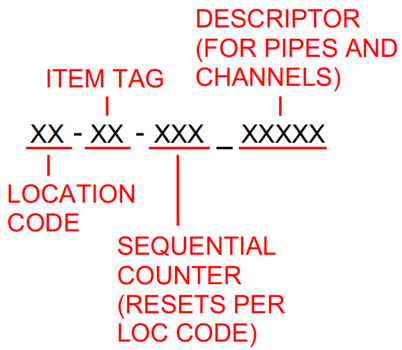

Location Tags

WW: Wet Weather Outfall
EF: Existing Effluent Outfall
CE: East Chlorine Contact Basin
CW: West Chlorine Contact Basin
FE: East Tertiary Filters
TE: East Tertiary Treatment
AF: Actiflo
ES: East Secondary Clarifiers
EAB: East Aeration Basin
WS: West Secondary Clarifiers
WAB: West Aeration Basins
PC: Primary Clarifiers
HW: Headworks
PE: Primary Effluent Bypass

Item Tags

OC: OPEN CHANNEL
DU: DUMMY
WE: WEIR
GA: GATE
PE: PIPE
OR: ORIFICE
FL: FLUME
JU: JUNCTION
SC: SCREEN/GRATE

WW WET WEATHER OUTFALL

		Exist Facilities Remaining	Facilities Added Ph 6 2010
East Filters			
Type, Quantity	Gravity Mono Media	6	4
Media depth, in.	48		
Media size, mm	1.4 Anthracite		
Surf. Area ea., sf	900		
Loading rate, gpm/sf			
ADDW		2.6	3
MMDW		3.9	3.9
MDDW		5	5
ADWW		3.7	4.4
MMWW		4	4.7
MDWW		4	6.7
Backwash Pumps			
Type, Quantity	Screw-ind cent	2	0
Capacity ea., gpm	13500@30'		
HP ea.	250		
Backwash Air Scour Blower			
Type, Quantity	Centrifugal	2	0
Capacity ea.,scfm@psi	4000@8.8		
HP ea.	200		
Backwash Surge Basins, Quantity		2	0
Diameter, ft.	50		
Normal water depth, ft.	15.5		
Volume ea., kgal	228		
BW Capacity total	Backwashes	2	0
Backwash Recycle Pumps			
Type, Quantity	Screw-ind centr	2	0
Capacity ea., gpm	2500@65 ft TDH		
HP ea.	60		
Disinfection			
Type	Sodium hypochlorite		
Storage			
FRP Storage Tank (Chem Bldg)	11,000 gal	2	0
FRP Day Tank (East)	3,000 gal	1	0
FRP Day Tank (West)	3,000 gal	1	0
Equipment			
Sodium Hypochlorite Transfer pumps			
Type, Quantity	Centrifugal	2	0
Capacity	30 gpm @ 25 ft		
HP ea.	3		
Type, Quantity	Centrifugal	2	0
Capacity	55 gpm @ 105 ft		
HP ea.	5		
Type, Quantity	Centrifugal	1	0
Capacity	40 gpm @ 22 ft		
HP ea.	3		
Type, Quantity	Centrifugal	1	0
Capacity	44 gpm @ 110 ft		
HP ea.	5		
Type, Quantity	Centrifugal	2	0
Capacity	50 gpm @ 30 ft		
HP ea.	3		
Feed System Chemical Metering pumps (East)			
Type, Quantity	Diaphragm	8	0
Capacity	100 gph @ 60 psig		
HP ea.	0.33		
Feed System Chemical Metering pumps (East)			
Type	Diaphragm		
Capacity, Quantity	100 gph @ 100 psig	3	
	90 gph at 150 psig	1	
	82 gph @ 100 psig	1	
	10 gph @ 50 psig	1	
	8 gph @ 60 psig	1	

		Exist Facilities Remaining	Facilities Added Ph 6 2010
Chlorine Residual Analyzer			
East		2	0
West		2	0
Flash Mixer			
East, HP / Quantity	2 hp	1	0
West, HP / Quantity	2 hp	2	0
West Chlorine Contact Basins, Quantity		2	0
Volume ea., kgal	312.5		
L/W ratio	38:1		
Detention Time, min.			
MMDW		50	50
MDDW		31	23
MMWW		35	30
MDWW		35	19
East Chlorine Contact Basins, Quantity		1	0
Volume ea., kgal	703		
L/W ratio	80:1		
Detention Time, min.			
MMDW		40	29
MDDW		22	22
MMWW		32	28
MDWW		32	13
Dechlorination - Post Aeration			
Type	Sodium Bisulfite		
Storage			
FRP Storage Tank	11,000 gal	1	0
FRP Feed Tank	3,000 gal	3	0
Equipment			
Sodium Bisulfite Transfer Pumps			
Type, Quantity	Centrifugal	2	0
Capacity	22 gpm @ 28 ft		
HP ea.	3		
Feed System Chemical Metering pumps			
Type, Quantity	Diaphragm	3	0
Capacity	50 gph @ 60 psig		
HP ea.	0.75		
Channel			
Detention Time, sec.	50 at 100 mgd		
Aeration diffuser type	fine membrane		
Post aeration blowers			
Type, Quantity	centrifugal	2	0
Capacity ea., scfm@psi	750@4.3		
HP ea.	40		
Effluent Flow Measurement			
Type, Quantity	Parshal Flume	2	0
Size, width., in.	48 in		
Outfall			
Length / Diameter	1245 / 60"		0
Material	Concrete / CMP Diffus		
No. of Manholes	1		
Number and Diameter of Difusers	12 / 15"		
Approx. Min. Submergence	6 ft		
Wet Weather Outfall			
Length / Diameter	1200 / 96"		
Material	Concrete		
No. of Manholes	2		
Number and Diameter of Difusers	96" Open Port		
Approx. Min. Submergence	>12" Wet Weather		
Flushing Flow	> 3.9 MGD		
Max Detention in Flooded Segment	< 35 minutes		

Existing outfall

Wet weather outfall

THIS DOCUMENT, AND THE IDEAS AND DESIGNS INCORPORATED HEREIN, AS AN INSTRUMENT OF PROFESSIONAL SERVICE, IS THE PROPERTY OF CH2M HILL AND IS NOT TO BE USED, IN WHOLE OR IN PART, FOR ANY OTHER PROJECT WITHOUT THE WRITTEN AUTHORIZATION OF CH2MHILL. ©CH2M HILL

REUSE OF DOCUMENTS:

RECORD DRAWINGS

Revisions Drawn By AM VARGAS Date OCT 2005

THESE RECORD DRAWINGS HAVE BEEN PREPARED, IN PART, ON THE BASIS OF INFORMATION COMPILED BY OTHERS. THEY ARE NOT INTENDED TO REPRESENT IN DETAIL THE EXACT LOCATION, TYPE OF COMPONENT NOR MANNER OF CONSTRUCTION. THE ENGINEER WILL NOT BE RESPONSIBLE FOR ANY ERRORS OR OMISSIONS WHICH HAVE BEEN INCORPORATED INTO THE RECORD DRAWINGS.

FOR SIGNATURES AND SEALS REFER TO ORIGINAL DRAWINGS DATED OCTOBER 2003

DSGN JF MCCORMICK
DR BD ROUSH
CHK KG CLEGG
APVD JF GRIFFITHS

NO.	DATE	REVISION	BY	APVD
	10/05	RECORD DRAWINGS	AMV	LJP

VERIFY SCALE
BAR IS ONE INCH ON ORIGINAL DRAWING. 0 1"
IF NOT ONE INCH ON THIS SHEET, ADJUST SCALES ACCORDINGLY.

CH2MHILL

ROCK CREEK FACILITY
PHASE 6A
EXPANSION AND UPGRADES
CLEAN WATER SERVICES
WASHINGTON COUNTY, OREGON

GENERAL

DESIGN CRITERIA SUMMARY
LIQUIDS 3

SHEET	24
DWG	601-G-25
DATE	MARCH 2004
PROJ	173962.CD

FILENAME: r601g025.dgn PLOT DATE: 05-OCT-2005 PLOT TIME: 14:10:17

96" Wet Weather Outfall

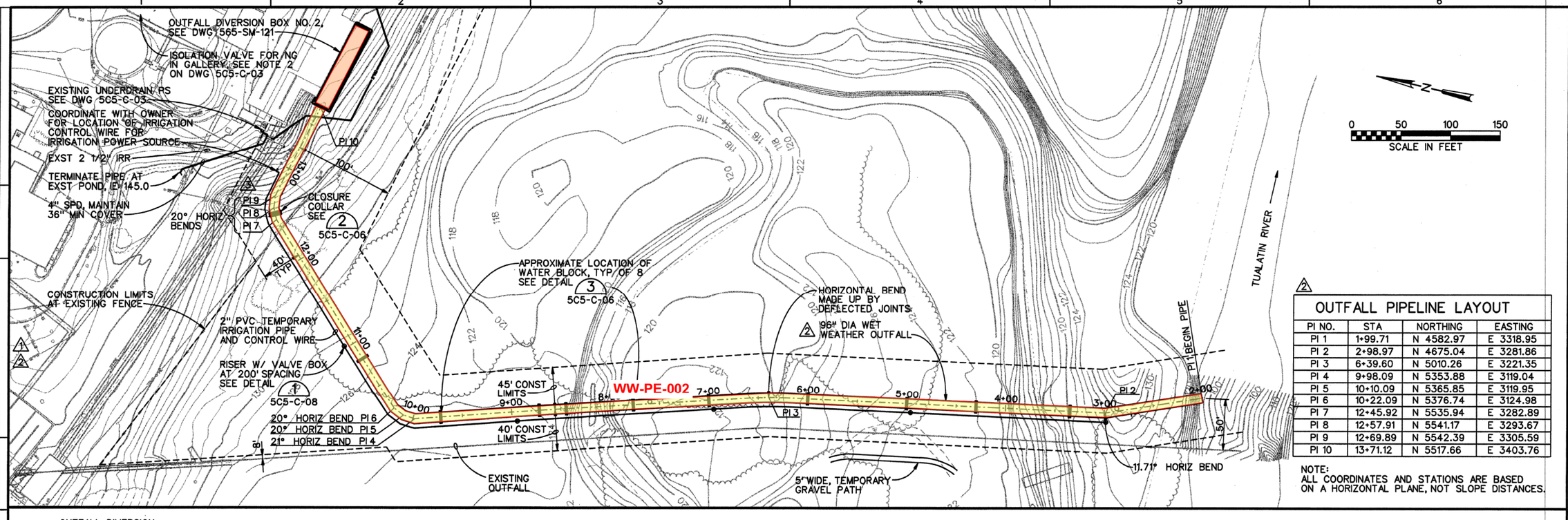

OUTFALL PIPELINE LAYOUT

PI NO.	STA	NORTHING	EASTING
PI 1	1+99.71	N 4582.97	E 3318.95
PI 2	2+98.97	N 4675.04	E 3281.86
PI 3	6+39.60	N 5010.26	E 3221.35
PI 4	9+98.09	N 5353.88	E 3119.04
PI 5	10+10.09	N 5365.85	E 3119.95
PI 6	10+22.09	N 5376.74	E 3124.98
PI 7	12+45.92	N 5535.94	E 3282.89
PI 8	12+57.91	N 5541.17	E 3293.67
PI 9	12+69.89	N 5542.39	E 3305.59
PI 10	13+71.12	N 5517.66	E 3403.76

NOTE:
ALL COORDINATES AND STATIONS ARE BASED ON A HORIZONTAL PLANE, NOT SLOPE DISTANCES.

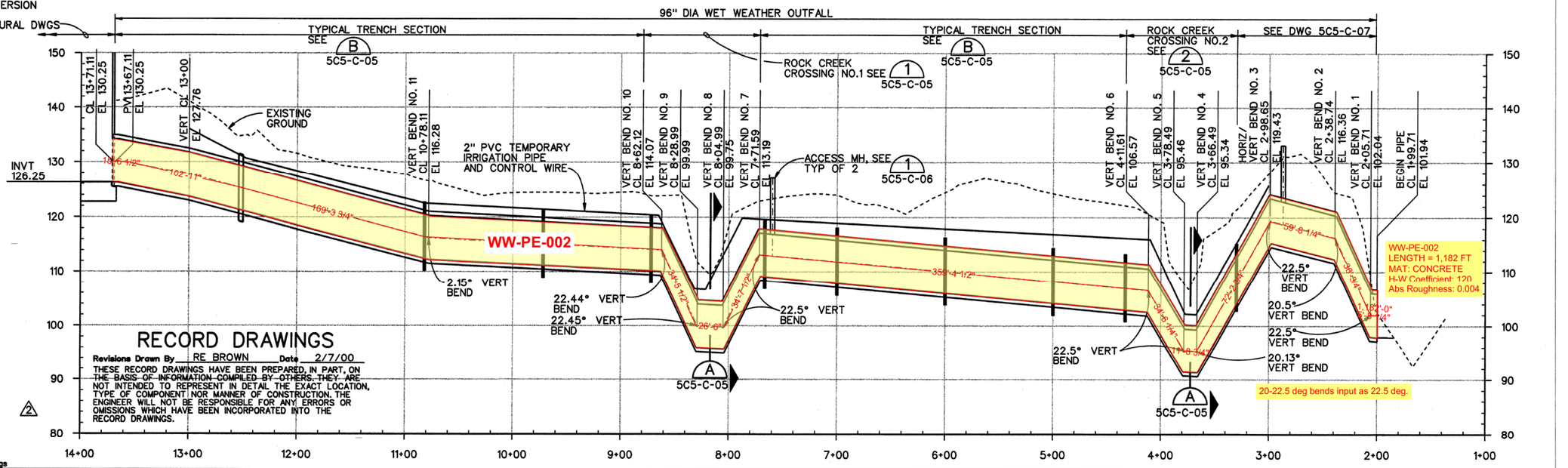

REUSE OF DOCUMENTS: THIS DOCUMENT, AND THE IDEAS AND DESIGNS INCORPORATED HEREIN, AS AN INSTRUMENT OF PROFESSIONAL SERVICE, IS THE PROPERTY OF CH2M HILL AND IS NOT TO BE USED, WHOLE OR IN PART, FOR ANY OTHER PROJECT WITHOUT THE WRITTEN AUTHORIZATION OF CH2M HILL. © CH2M HILL

The Contract Document Drawings are printed documents dated April 1999, as subsequently amended, which define the scope, extent, and character of the work. The original document drawing was sealed & signed by William B. Wagner, State of Oregon, P.E. No. 10,642, dated July 16, 1980.

DSGN	J JACOBSEN
DR	M POPKEN
CHK	W WAGNER
APVD	J GOETZ

NO.	DATE	REVISION	BY	APVD
4	2/00	RECORD DRAWING	REB	JMP
3	10/99	CIR NO. 20	JMP	JMP
2	8/99	CIR NO. 9	JMP	JMP
1	4/99	CIR NO. 1	JDD	WBW
	4/99	ADDENDUM NO. 1	JDD	WBW

VERIFY SCALE
BAR IS ONE INCH ON ORIGINAL DRAWING.
IF NOT ONE INCH ON THIS SHEET, ADJUST SCALES ACCORDINGLY.

CH2MHILL

ROCK CREEK FACILITY EXPANSION - PHASE 5
PACKAGE C
UNIFIED SEWERAGE AGENCY
WASHINGTON COUNTY, OREGON

WET WEATHER OUTFALL
OUTFALL PIPELINE PLAN AND PROFILE

SHEET	15
DWG	5C5-C-04
DATE	APR 1999
PROJ	146190

//CVONT1/prj/unified sewerage agency/rock creek phase 5/CAD/drawings/r5c5cp01.dlv PLOT DATE: 13-APR-2000 PLOT TIME: 10:53:30

r5-5dcopy.met 2-9, 11, 13-41, 43-54, 56-57, 61
r5-6dcopy.met 32, 34, 36-37, 39-40
r5-5dcopy.met 1-8, 2-63
r5-5dcopy.met 1-63
r5-6dcopy.met 6, 21, 23-25, 41, 46-48, 59-61
r5-6dcopy.met 1-44, 49-60, 63-63
r5-5dborder.met

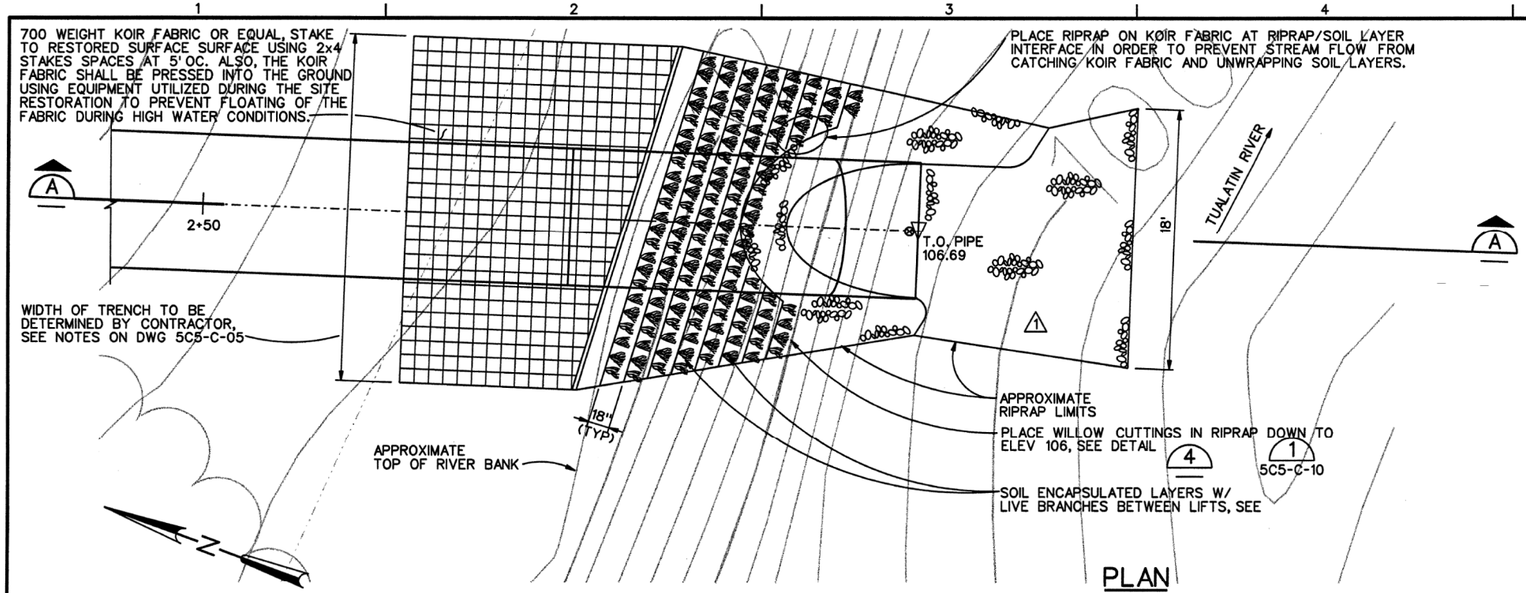

PLAN
1"=5'

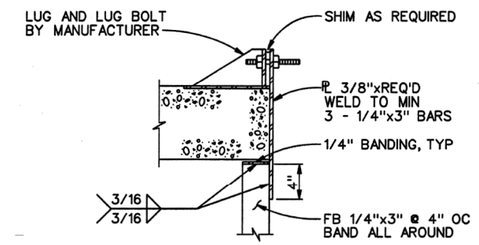

DETAIL 1
1 1/2"=1'

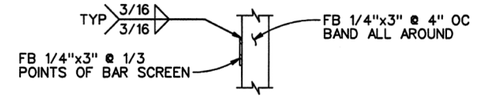

DETAIL 2
1 1/2"=1'

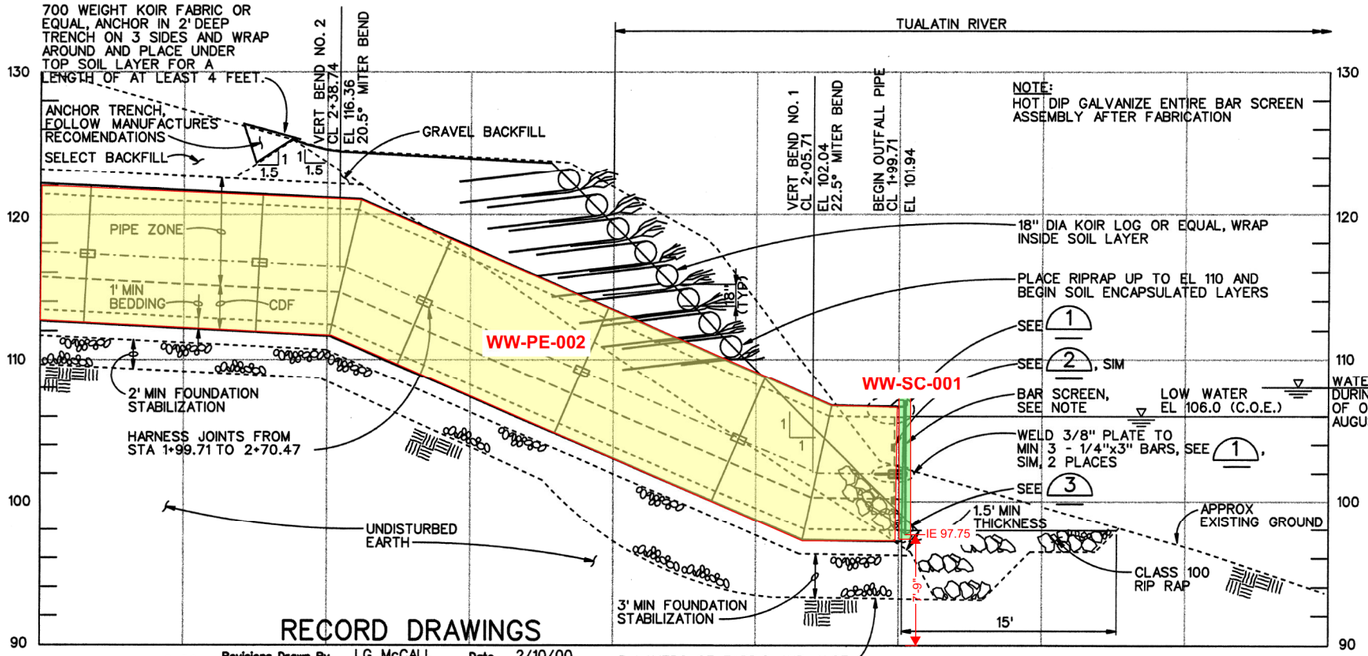

SECTION A
1"=5'

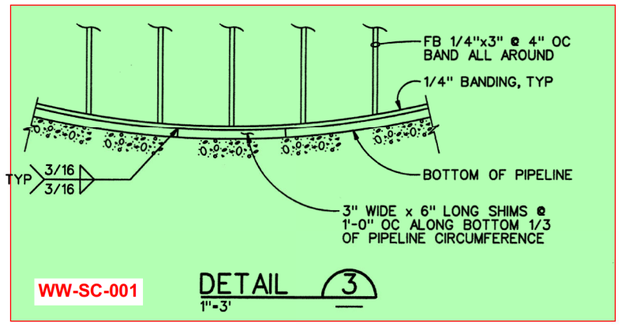

DETAIL 3
1"=3'

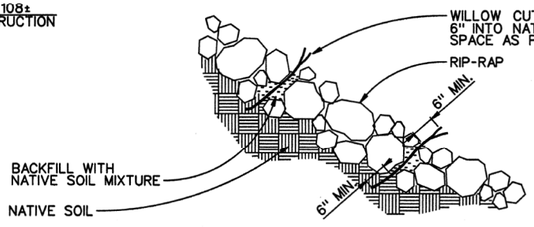

NOTE:
CREATE GAPS IN RIP-RAP TO FACILITATE PLANTING OF WILLOW CUTTINGS. BACKFILL TO NATIVE SOIL.

TYP CUTTINGS IN RIP-RAP 4
NTS

RECORD DRAWINGS

Revisions Drawn By LG McCALL Date 2/10/00

THESE RECORD DRAWINGS HAVE BEEN PREPARED, IN PART, ON THE BASIS OF INFORMATION COMPILED BY OTHERS. THEY ARE NOT INTENDED TO REPRESENT IN DETAIL THE EXACT LOCATION, TYPE OF COMPONENT NOR MANNER OF CONSTRUCTION. THE ENGINEER WILL NOT BE RESPONSIBLE FOR ANY ERRORS OR OMISSIONS WHICH HAVE BEEN INCORPORATED INTO THE RECORD DRAWINGS.

REUSE OF DOCUMENTS: THIS DOCUMENT, AND THE IDEAS AND DESIGNS INCORPORATED HEREIN, AS AN INSTRUMENT OF PROFESSIONAL SERVICE, IS THE PROPERTY OF CH2M HILL AND IS NOT TO BE USED, WHOLE OR IN PART, FOR ANY OTHER PROJECT WITHOUT THE WRITTEN AUTHORIZATION OF CH2M HILL. © CH2M HILL

The Contract Document Drawings are printed documents dated April 1999, as subsequently amended, which define the scope, extent, and character of the work. The original document drawing was sealed & signed by William B. Wagner, State of Oregon, P.E. No. 10,642, dated July 18, 1980.

DSGN	P DAVIS
DR	M POPKEN
CHK	W WAGNER
APVD	J GOETZ

NO.	DATE	REVISION	BY	APVD
1	2/00 4/99	RECORD DRAWING CIR NO. 1	LGM JDD	JMP WBW

VERIFY SCALE
BAR IS ONE INCH ON ORIGINAL DRAWING. 0 1"
IF NOT ONE INCH ON THIS SHEET, ADJUST SCALES ACCORDINGLY.

CH2MHILL

ROCK CREEK FACILITY
EXPANSION - PHASE 5
PACKAGE C
UNIFIED SEWERAGE AGENCY
WASHINGTON COUNTY, OREGON

WET WEATHER OUTFALL
OUTFALL PIPELINE SECTIONS AND DETAILS

SHEET	18
DWG	5C5-C-07
DATE	APR 1999
PROJ	146190

//CVONT1/prj/unified sewerage agency/rock creek phase 5/CAD/drawings/r5c5c405.dlv PLOT DATE: 13-APR-2000 PLOT TIME: 10:51:30

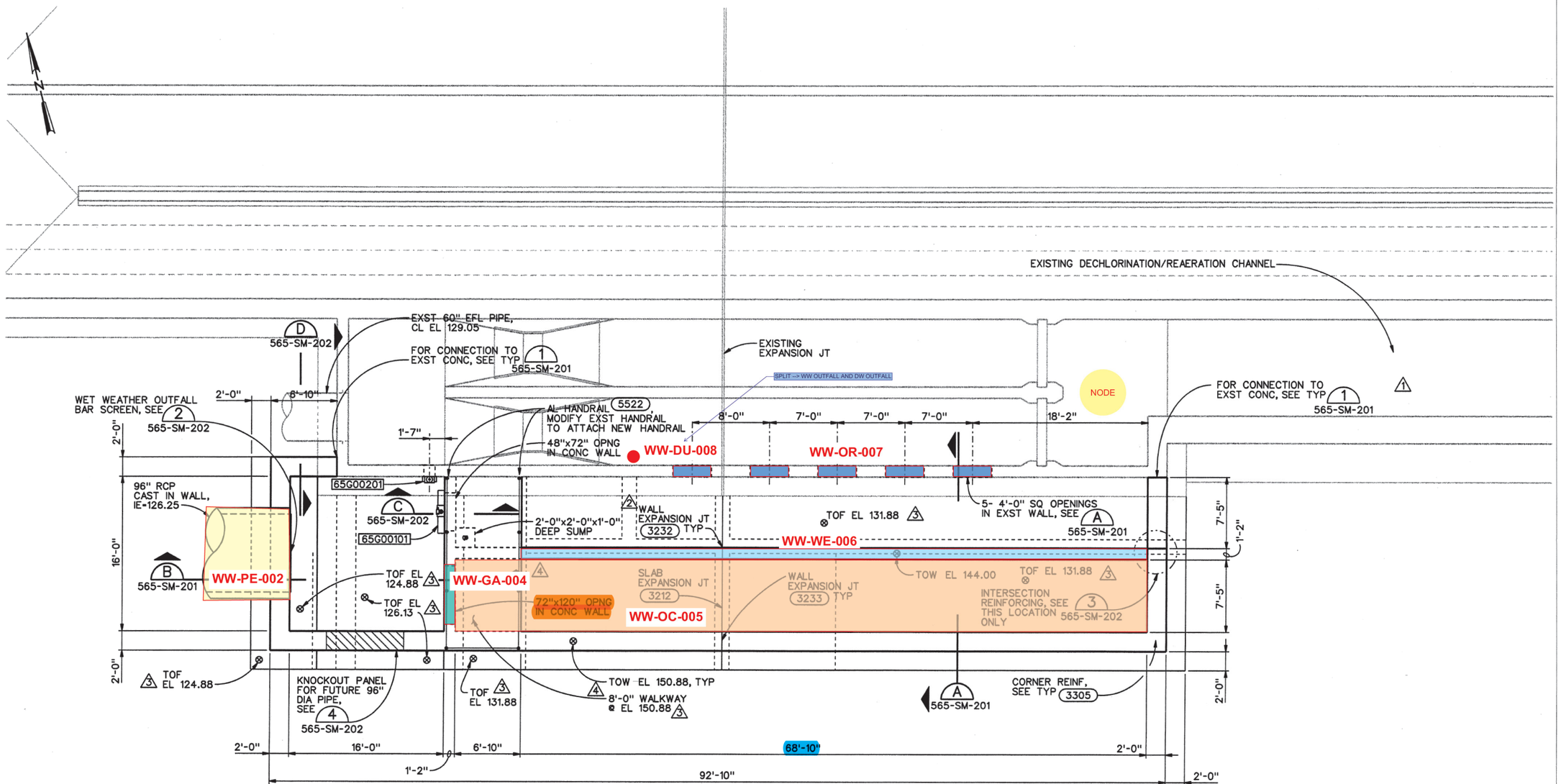

FOUNDATION PLAN

3/16"=1'-0"

RECORD DRAWINGS

Revisions Drawn By LG McCALL **Date** 2/10/00

THESE RECORD DRAWINGS HAVE BEEN PREPARED, IN PART, ON THE BASIS OF INFORMATION COMPILED BY OTHERS. THEY ARE NOT INTENDED TO REPRESENT IN DETAIL THE EXACT LOCATION, TYPE OF COMPONENT NOR MANNER OF CONSTRUCTION. THE ENGINEER WILL NOT BE RESPONSIBLE FOR ANY ERRORS OR OMISSIONS WHICH HAVE BEEN INCORPORATED INTO THE RECORD DRAWINGS.

The Contract Document Drawings are printed documents dated April 1999, as subsequently amended, which define the scope, extent, and character of the work. The original document drawing was sealed & signed by Alex L. Firth, State of Oregon, P.E. No. 15,977, dated July 21, 1992.

DSGN AL FIRTH
B FULLER
DR EJ PUIG
CHK SM FREY
APVD J GOETZ

NO.	DATE	REVISION	BY	APVD
4	2/00	RECORD DRAWING	LGM	JMP
3	10/99	CIR NO. 18	PB	JMP
2	9/99	CIR NO. 16	JMP	JMP
1	9/99	CIR NO. 14	JMP	JMP
	3/99	ADDENDUM NO. 1	EJP	ALF

VERIFY SCALE
BAR IS ONE INCH ON ORIGINAL DRAWING. IF NOT ONE INCH ON THIS SHEET, ADJUST SCALES ACCORDINGLY.

CH2MHILL

ROCK CREEK FACILITY
EXPANSION - PHASE 5
PACKAGE C
UNIFIED SEWERAGE AGENCY
WASHINGTON COUNTY, OREGON

FILTER & DISINFECTION
STRUCTURAL/MECHANICAL
EFFLUENT DIVERSION BOX
FOUNDATION PLAN

SHEET	23
DWG	565-SM-121
DATE	APR 1999
PROJ	146190

//CVONT1/prj/unified sewerage agency/rock creek phase 5/CAD/drawings/r565s121.dlv PLOT DATE: 10-FEB-2000 PLOT TIME: 15:18:40

REUSE OF DOCUMENTS: THIS DOCUMENT, AND THE IDEAS AND DESIGNS INCORPORATED HEREIN, AS AN INSTRUMENT OF PROFESSIONAL SERVICE, IS THE PROPERTY OF CH2M HILL AND IS NOT TO BE USED, WHOLE OR IN PART, FOR ANY OTHER PROJECT WITHOUT THE WRITTEN AUTHORIZATION OF CH2M HILL. © CH2M HILL

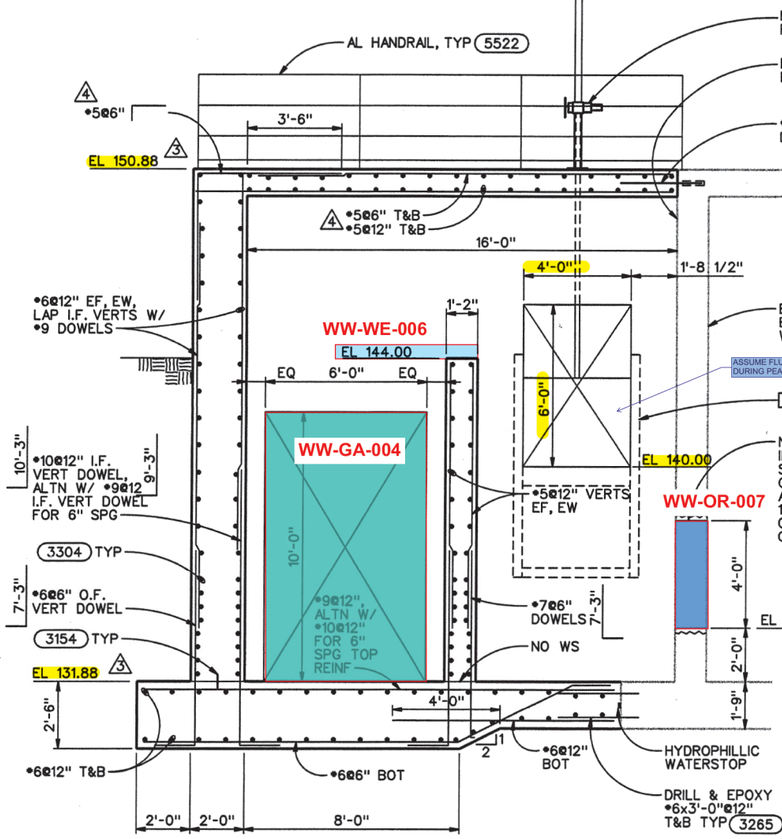

SECTION A
3/8"=1'-0" 565-SM-121

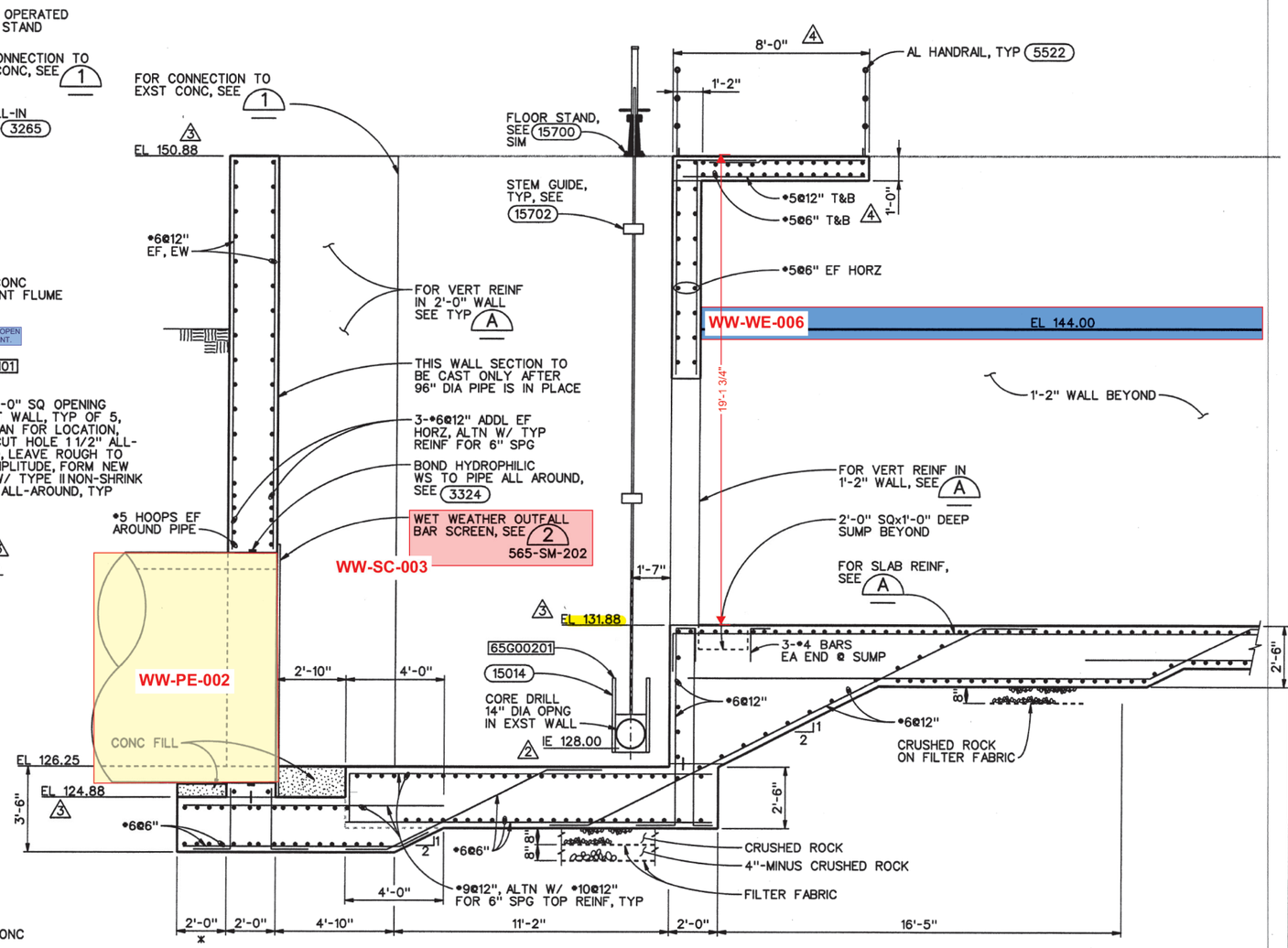

SECTION B
3/8"=1'-0" 565-SM-121

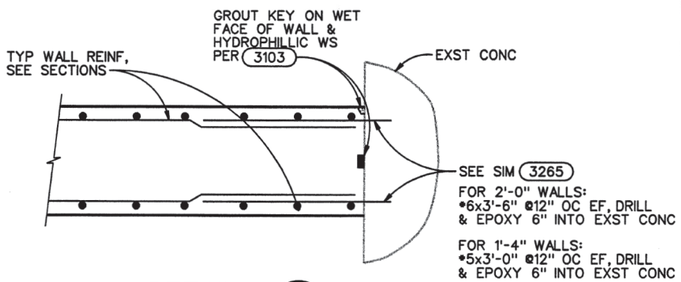

DETAIL 1
3/4"=1'-0" 565-SM-121 /1

NOTE:
* FOOTING EXTENSION ON WEST SIDE OF STRUCTURE WILL VARY. EXTEND FOOTING AS REQUIRED TO SUPPORT 96" DIA PIPE TO FIRST PIPE JOINT.

RECORD DRAWINGS

Revisions Drawn By LG McCALL Date 2/10/00

THESE RECORD DRAWINGS HAVE BEEN PREPARED, IN PART, ON THE BASIS OF INFORMATION COMPILED BY OTHERS. THEY ARE NOT INTENDED TO REPRESENT IN DETAIL THE EXACT LOCATION, TYPE OF COMPONENT NOR MANNER OF CONSTRUCTION. THE ENGINEER WILL NOT BE RESPONSIBLE FOR ANY ERRORS OR OMISSIONS WHICH HAVE BEEN INCORPORATED INTO THE RECORD DRAWINGS.

REUSE OF DOCUMENTS: THIS DOCUMENT, AND THE IDEAS AND DESIGNS INCORPORATED HEREIN, AS AN INSTRUMENT OF PROFESSIONAL SERVICE, IS THE PROPERTY OF CH2M HILL AND IS NOT TO BE USED, WHOLE OR IN PART, FOR ANY OTHER PROJECT WITHOUT THE WRITTEN AUTHORIZATION OF CH2M HILL. © CH2M HILL

The Contract Document Drawings are printed documents dated April 1999, as subsequently amended, which define the scope, extent, and character of the work. The original document drawing was sealed & signed by Alex L. Firth, State of Oregon, P.E. No. 15,977, dated July 21, 1992.

DSGN	DR	CHK	APVD
AL FIRTH	EJ PUIG	SM FREY	J GOETZ

NO.	DATE	REVISION	BY	APVD
4	2/00	RECORD DRAWING	LGM	JMP
3	10/99	CIR NO. 18	PB	JMP
2	9/99	CIR NO. 16	JMP	JMP
1	6/99	CIR NO. 3	JMP	JMP
	4/99	ADDENDUM NO. 1	EJP	ALF

VERIFY SCALE
BAR IS ONE INCH ON ORIGINAL DRAWING. 0 1"
IF NOT ONE INCH ON THIS SHEET, ADJUST SCALES ACCORDINGLY.

CH2MHILL

ROCK CREEK FACILITY EXPANSION - PHASE 5 PACKAGE C
UNIFIED SEWERAGE AGENCY
WASHINGTON COUNTY, OREGON

FILTER & DISINFECTION
STRUCTURAL/MECHANICAL EFFLUENT DIVERSION BOX SECTIONS AND DETAIL

SHEET	24
DWG	565-SM-201
DATE	APR 1999
PROJ	146190

r5x5border.met I=5, d=60, B=63
r5x565sm01.met I=59 I=63
r5x565sm02.met I=59 I=63
STAMP.DGN ALF,DGN

//CVONT1/prj/unified sewerage agency/rock creek phase 5/CAD/drawings/r565s201.dlv PLOT DATE: 10-FEB-2000 PLOT TIME: 07:57:46

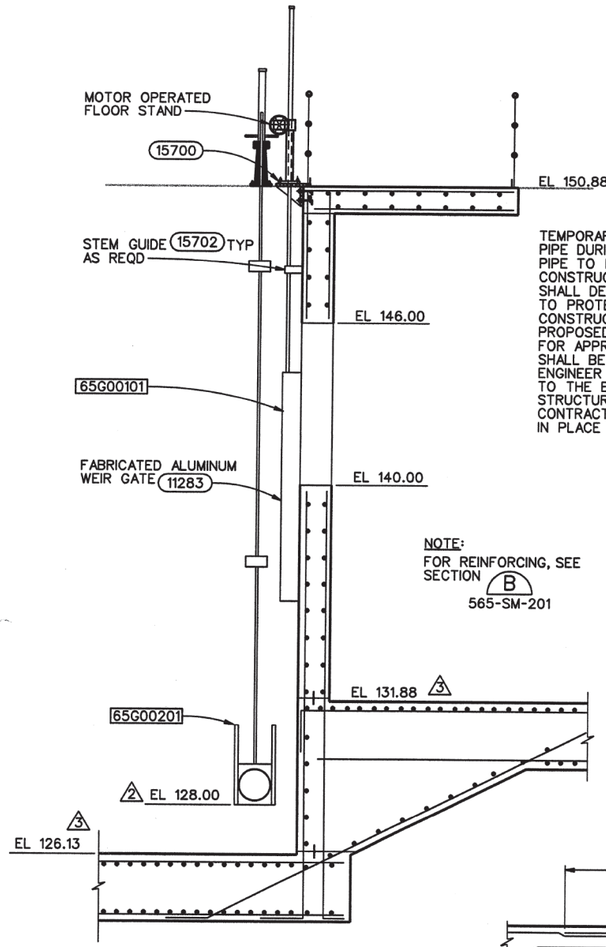

NOTE:
FOR REINFORCING, SEE SECTION B 565-SM-201

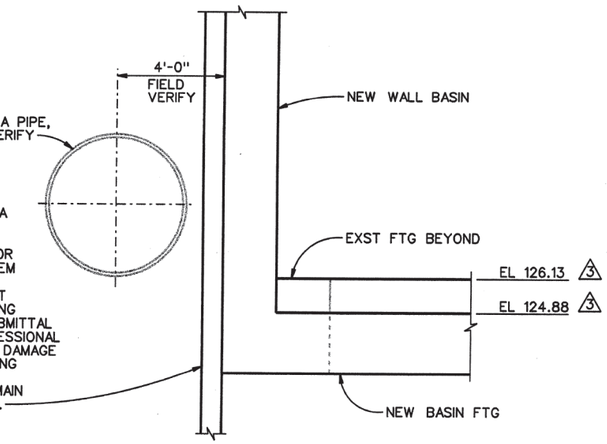

TEMPORARY SHORING TO PROTECT 60" DIA PIPE DURING CONSTRUCTION. EXISTING 60" PIPE TO REMAIN IN SERVICE DURING CONSTRUCTION OF NEW BASIN. CONTRACTOR SHALL DESIGN TEMPORARY SHORING SYSTEM TO PROTECT PIPE FROM DAMAGE DURING CONSTRUCTION. CONTRACTOR SHALL SUBMIT PROPOSED METHOD OF TEMPORARY SHORING FOR APPROVAL BY ENGINEER. SHORING SUBMITTAL SHALL BE STAMPED BY A LICENSED PROFESSIONAL ENGINEER IN THE STATE OF OREGON. ANY DAMAGE TO THE EXISTING 60" PIPE OR THE EXISTING STRUCTURE MUST BE REPAIRED AT THE CONTRACTORS EXPENSE. SHORING CAN REMAIN IN PLACE AFTER NEW BASIN IS COMPLETE.

SECTION D
3/8"-1'-0" 565-SM-121

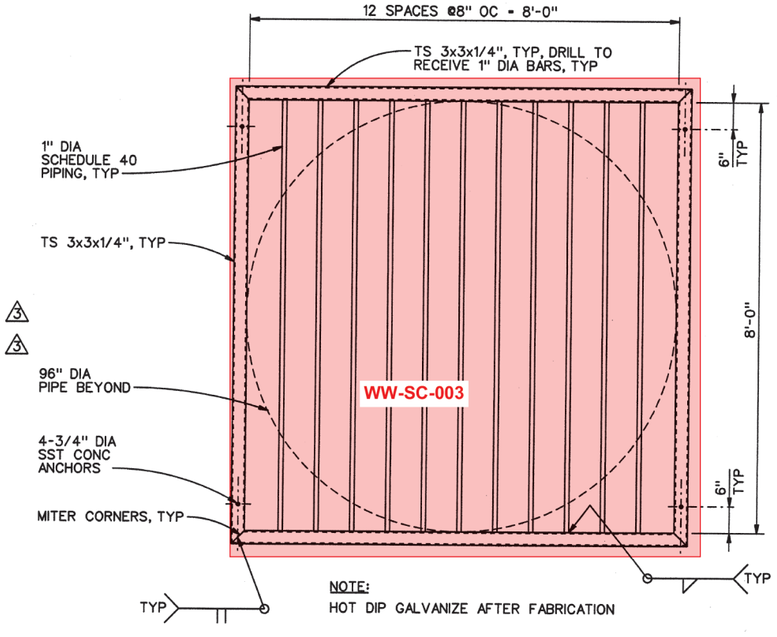

NOTE:
HOT DIP GALVANIZE AFTER FABRICATION

DETAIL 2
3/4"-1'-0" 565-SM-121
565-SM-201

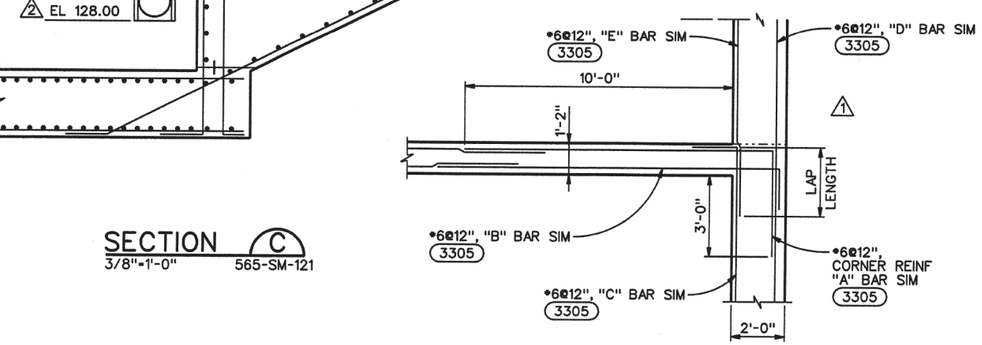

SECTION C
3/8"-1'-0" 565-SM-121

NOTE:
DETAIL APPLIES ONLY BELOW ELEVATION 144.00.

REINFORCING PLAN DETAIL 3
3/8"-1'-0" 565-SM-121

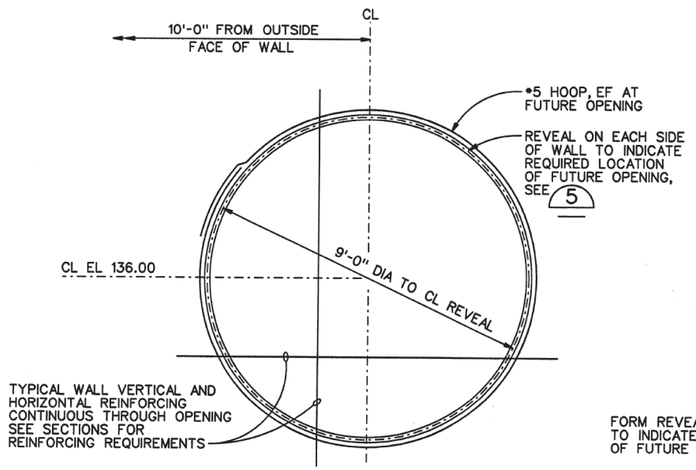

FUTURE PIPE OPENING 4
1/2"-1'-0" 565-SM-121

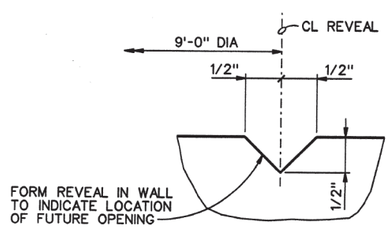

REVEAL 5
NTS

RECORD DRAWINGS

Revisions Drawn By LG McCALL **Date** 2/10/00

THESE RECORD DRAWINGS HAVE BEEN PREPARED, IN PART, ON THE BASIS OF INFORMATION COMPILED BY OTHERS. THEY ARE NOT INTENDED TO REPRESENT IN DETAIL THE EXACT LOCATION, TYPE OF COMPONENT NOR MANNER OF CONSTRUCTION. THE ENGINEER WILL NOT BE RESPONSIBLE FOR ANY ERRORS OR OMISSIONS WHICH HAVE BEEN INCORPORATED INTO THE RECORD DRAWINGS.

The Contract Document Drawings are printed documents dated April 1999, as subsequently amended, which define the scope, extent, and character of the work. The original document drawing was sealed & signed by Alex L. Firth, State of Oregon, P.E. No. 15,977, dated July 21, 1992.

DSGN	AL FIRTH
DR	EJ PUIG
CHK	SM FREY
APVD	J GOETZ

NO.	DATE	REVISION	BY	APVD
4	2/00	RECORD DRAWING	LGM	JMP
3	10/99	CIR NO. 18	PB	JMP
2	9/99	CIR NO. 16	JMP	JMP
1	6/99	CIR NO. 3	JMP	JMP
	4/99	ADDENDUM NO. 1	EJP	ALF

VERIFY SCALE
BAR IS ONE INCH ON ORIGINAL DRAWING.
0 1"
IF NOT ONE INCH ON THIS SHEET, ADJUST SCALES ACCORDINGLY.

CH2MHILL

ROCK CREEK FACILITY
EXPANSION - PHASE 5
PACKAGE C
UNIFIED SEWERAGE AGENCY
WASHINGTON COUNTY, OREGON

FILTER & DISINFECTION
STRUCTURAL/MECHANICAL
EFFLUENT DIVERSION BOX
SECTIONS AND DETAILS

SHEET	25
DWG	565-SM-202
DATE	APR 1999
PROJ	146190

REUSE OF DOCUMENTS: THIS DOCUMENT, AND THE IDEAS AND DESIGNS INCORPORATED HEREIN, AS AN INSTRUMENT OF PROFESSIONAL SERVICE, IS THE PROPERTY OF CH2M HILL AND IS NOT TO BE USED, WHOLE OR IN PART, FOR ANY OTHER PROJECT WITHOUT THE WRITTEN AUTHORIZATION OF CH2M HILL. © CH2M HILL

EF EXISTING EFFLUENT OUTFALL

60" Dry Weather (Existing) Outfall

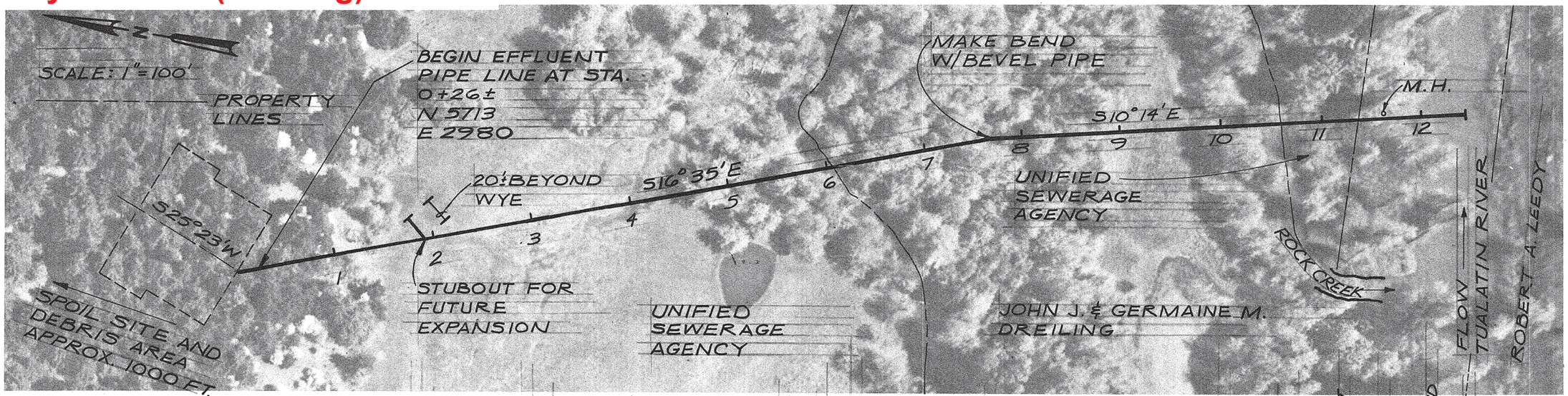

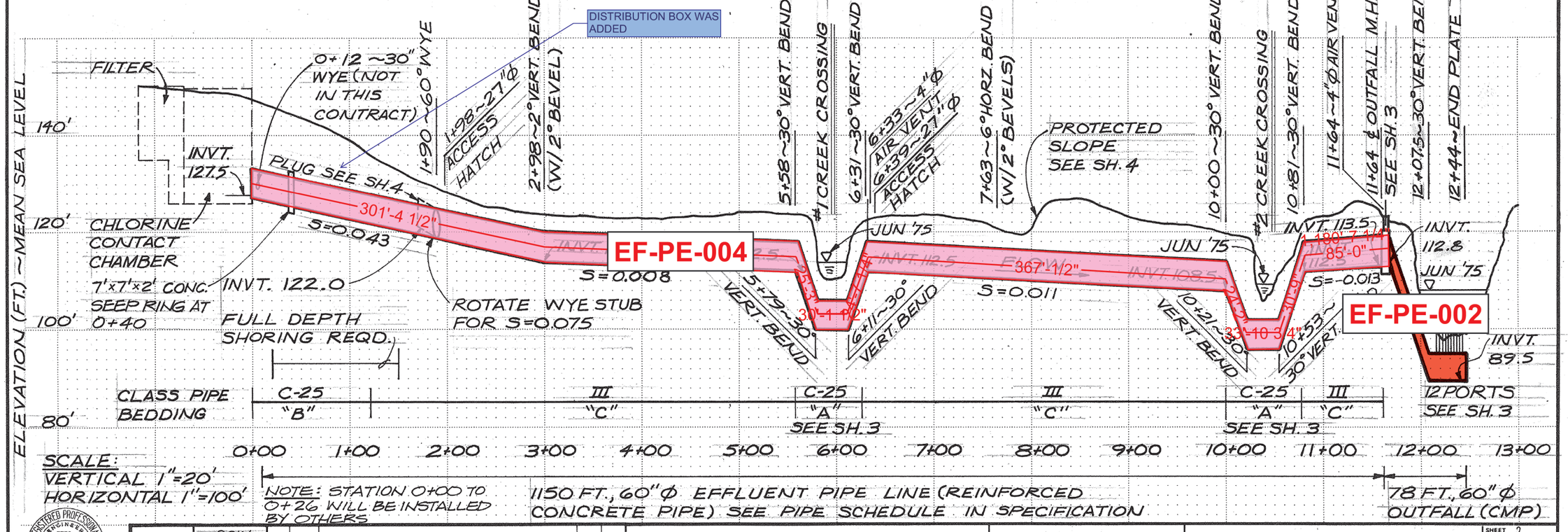

REGISTERED PROFESSIONAL ENGINEER 7753 OREGON JULY 13, 1973 DENNIS A. SANDRETTO

CH2M HILL

DES. RCW
DR. AGO
CHK. RWL
APVD. DAS

NO.	DATE	REVISION	BY	APPD.
1	APR. 18	RECORD DRAWING	WP	ARR

UNIFIED SEWERAGE AGENCY
WASHINGTON COUNTY, OREGON
ROCK CREEK
ADVANCED WASTEWATER TREATMENT PLANT

CONTRACT NO. 15
PLAN AND PROFILE

SHEET 2 OF 4
DATE AUG. 75
DWG. NO. E8892-9

SEE 1/4 # 3403

EF-MH-003
EF-PE-004
EF-PE-002
EF-OR-001
STA. 11+60
STA. 11+76± TOP OF RIPRAP
EL. 123.5
TOP OF MANHOLE 3" TO 6" PROJECTION
4'-0"
1'-0" MIN.
6" MIN.
3'-0" MAX. CUT OFF BARS AS REQD. IN AREA OF PIPE
M.H. STEPS AT 12"
SLOPE BETWEEN INVERTS
60" I.D.
#5 @12" E.W.
4'-0" MAX.
INVT. 112.8
#5 HOOP AROUND BOTH PIPES
60" I.D.
INVT. 113.5
1" MINUS GRAVEL BEDDING & BACKFILL
6" MIN.
1'-2"
5'-6"
2'-3"
2'-2"
6"
9'-10" RECTANGULAR
GRAVEL FILTER
TYPE I RIPRAP
1" MINUS GRAVEL BACKFILL
12" MIN.
2'-0" MIN.
2'-0" MIN.
1" MINUS GRAVEL BEDDING & BACKFILL
SLOPE VARIES WITH FIELD CONDITIONS
STA. 12+00 BREAK IN SLOPE
1.5
1.0
6'-0" MIN.
DIFFUSER FEED SECTION
B 3|3
11 JUN 75
1/4"=1'
EL. 106.0 V. LOW WATER (50 CFS) CORPS OF ENGINEERS
STA. 12+15± BASE OF SLOPE
STA. 12+16.3 ℄ FIRST PORT
2.0
1.0
3'-3"
2'-6" (TYP.)
2'-6" (TYP.)
L 2½"x2½"x¼" STIFFENER, 2'-0" LONG, OVER BANDED COUPLING AT JOINT. FASTEN TO PORT W/ FOUR GALV. ¾" BOLTS, NUTS & WASHERS. (ONE L STIFFENER PER COUPLING.) (TYP.)
12 11 10 9 8 7 4 3 2 1
PIPE COUPLING (TYPICAL)
INVT. 89.5
30° MITER BEND
STA. 12+07.5
6" MIN.
L 2½"x2½"x¼" STIFFENERS, 5'-0" LONG, OVER BANDED COUPLING AT JOINT. FASTEN TO DIFFUSER W/ FOUR GALV. ¾" BOLTS, NUTS & WASHERS. (TOTAL OF FOUR L STIFFENERS PER COUPLING) (TYP.)
C 3|3
STA. 12+44 END PLATE
RIVER BOTTOM PROFILE JUNE 1975
SAND
TYPE I RIPRAP
EXCAVATED SLOPE; ALIGN WITH EXISTING BANK SLOPE
1" MINUS GRAVEL BEDDING & BACKFILL
FLOW
45° MITER BEND
3" PROJECTION
EL. 99.0
1'-0"
SAND
TYPE I RIPRAP
2'-0" MIN.
3" MIN.
9" MIN. OVER PIPE
GRAVEL FILTER
COUPLING (TYP.)
45°
SLOPE VARIES WITH FIELD CONDITIONS
1" MINUS GRAVEL BEDDING & BACKFILL
6'-0" MIN.
DIFFUSER PORTS SECTION C 3|3
1/4"=1'
1-3"ϕ CMP. PORTS FIELD ASSEMBLED W/ COVERS, SEE SH. 4
NOTE: COVERS FOR DIFFUSER PORTS 1, 2, 4, 6, 8, 10 & 12 REMOVED BY DIVERS ON SEPT. 7, 1977, AS MUTUALLY AGREED TO BY UNIFIED SEWERAGE AGENCY & CH2M HILL.
A 3|3
#4 "CI AIR VENT W/ "U"
EL. 125.0
2'-0"
2'-1½"
GROUT IN M.H. FRAME/PRESSURE COVER
C.I. HUB & SPIGOT COMPRESSION JOINT
#5 HOOP AROUND MANHOLE OPENING
42" ECCENTRIC CONE KEY JOINT, LENGTH 3'
EL. 117.8
#5 @12" E.W
GROUT IN SMOOTH CHANNEL
#5@12" E.W.
EL. 112.50
1'-7" LAP SPLICE (TYP.)
6" 8" 3'-3" 3'-3" 8" 6"
8'-10" RECTANGULAR
#5 @12" E.W.
NOTE: GROUT BASE OF 42" ECCENTRIC CONE.
OUTFALL MANHOLE A 3|3
1/4"=1'
STA. 5+58~VERT. ℄
STA. 5+85± TOE OF SLOPE
STA. 6+06± TOE OF SLOPE
STA. 6+31~VERT. ℄
STA. 6+33~VERT.
TYPE II RIPRAP GRAVEL FILTER
1.5
1.0
1" MINUS GRAVEL BACKFILL
6" C.I. VENT W/ 1" MESH SCREEN SECURED OVER END
FIT TO NATURAL SLOPE
EL. 126.5
4" C.I. AIR VENT W/ "U"
PJTN. 1'±
INVT. 118.5
HUB & SPIGOT COMPRESSION JOINT, C.I. "TEE" 6" x 4" x 4"
CONCRETE SADDLE 24" x 24" x 12" HIGH
11 JUN 75
EL. 110.0±
INVT. 112.5
INVT. 112.5
30° MITER BENDS
30° MITER BEND
30° MITER BEND
HARNESS JOINTS FROM STA. 5+50 TO 6+38 IN THE HORIZONTAL PLANE
INVT. 100.5
2'-0"
12" MIN. BELOW PIPE
CONCRETE CRADLE STA. 5+74 TO 6+16
CLASS "A" BEDDING (SEE DETAIL SH. 4)
#1 CREEK CROSSING
1/8"=1'
ELEVATION OUTFALL/DIFFUSER
1/4"=1'
STA. 10+00 VERT. ℄
STA. 10+34± TOE OF SLOPE
STA. 10+37± TOE OF SLOPE
STA. 10+81~ VERT. ℄
TYPE II RIPRAP GRAVEL FILTER
1.5
1.0
1" MINUS GRAVEL BACKFILL
GENERALLY FIT TO NATURAL SLOPE, DO NOT EXCEED 30°
3.0
1.0
5 JUN 75
EL. 106.0±
INVT. 108.5
30° MITER BEND
INVT. 96.5
30° MITER BENDS
INVT. 112.5
30° MITER BEND
HARNESS JOINTS FROM STA. 9+92 TO 10+90 IN THE HORIZONTAL PLANE
2'-0"
6" MIN. BELOW PIPE
CONCRETE CRADLE STA. 10+15 TO 10+58
CLASS "A" BEDDING (SEE DETAIL SH. 4)
#2 CREEK CROSSING
1/8"=1'
REGISTERED PROFESSIONAL ENGINEER 7755 OREGON JULY 13, 1979 DENNIS A. SANDRETTO
CH2M HILL
DES. RCW
DR. AGO
CHK. RWL
APPD. DAS
NO. 1 | DATE AUG 78 | REVISION RECORD DRAWING | BY LJP | APPD. ARR
UNIFIED SEWERAGE AGENCY
WASHINGTON COUNTY, OREGON
ROCK CREEK
ADVANCED WASTEWATER TREATMENT PLANT
CONTRACT NO. I-5
MANHOLE AND STREAM ENTRANCES
SHEET 3 OF 4
DATE AUG. 1975
DWG. NO. C8892-9

DATE: 10/31/90 VERSION NO. X
DGN NAME: I:/P21262/M1/STRUCT/RC3S002.DGN

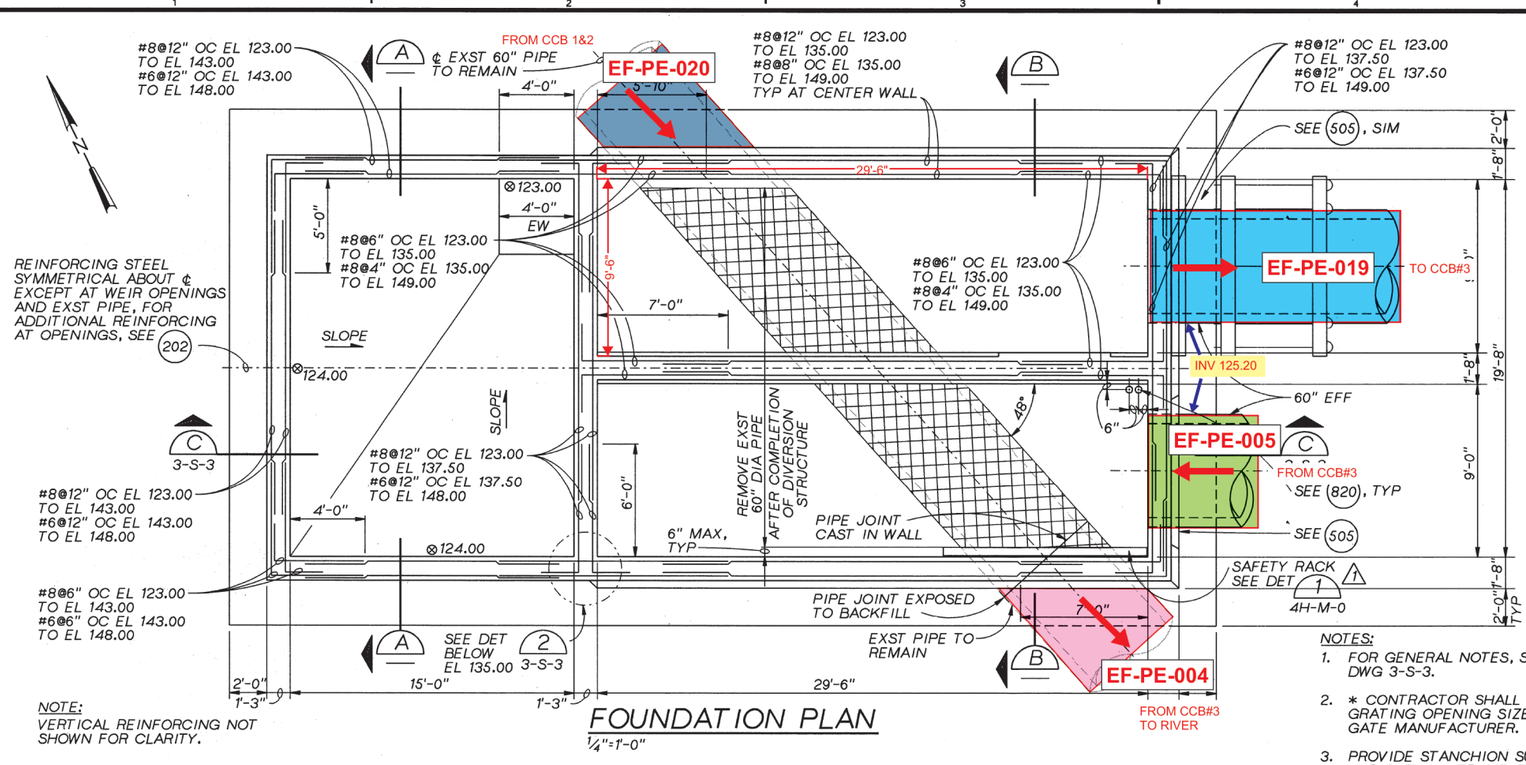

NOTE:
VERTICAL REINFORCING NOT SHOWN FOR CLARITY.

FOUNDATION PLAN
1/4"=1'-0"

NOTES:
1. FOR GENERAL NOTES, SEE DWG 3-S-3.
2. * CONTRACTOR SHALL VERIFY GRATING OPENING SIZE WITH GATE MANUFACTURER.
3. PROVIDE STANCHION SUPPORT FOR BOTH INSTRUMENTS. FOR INSTALLATION SEE (816)/2

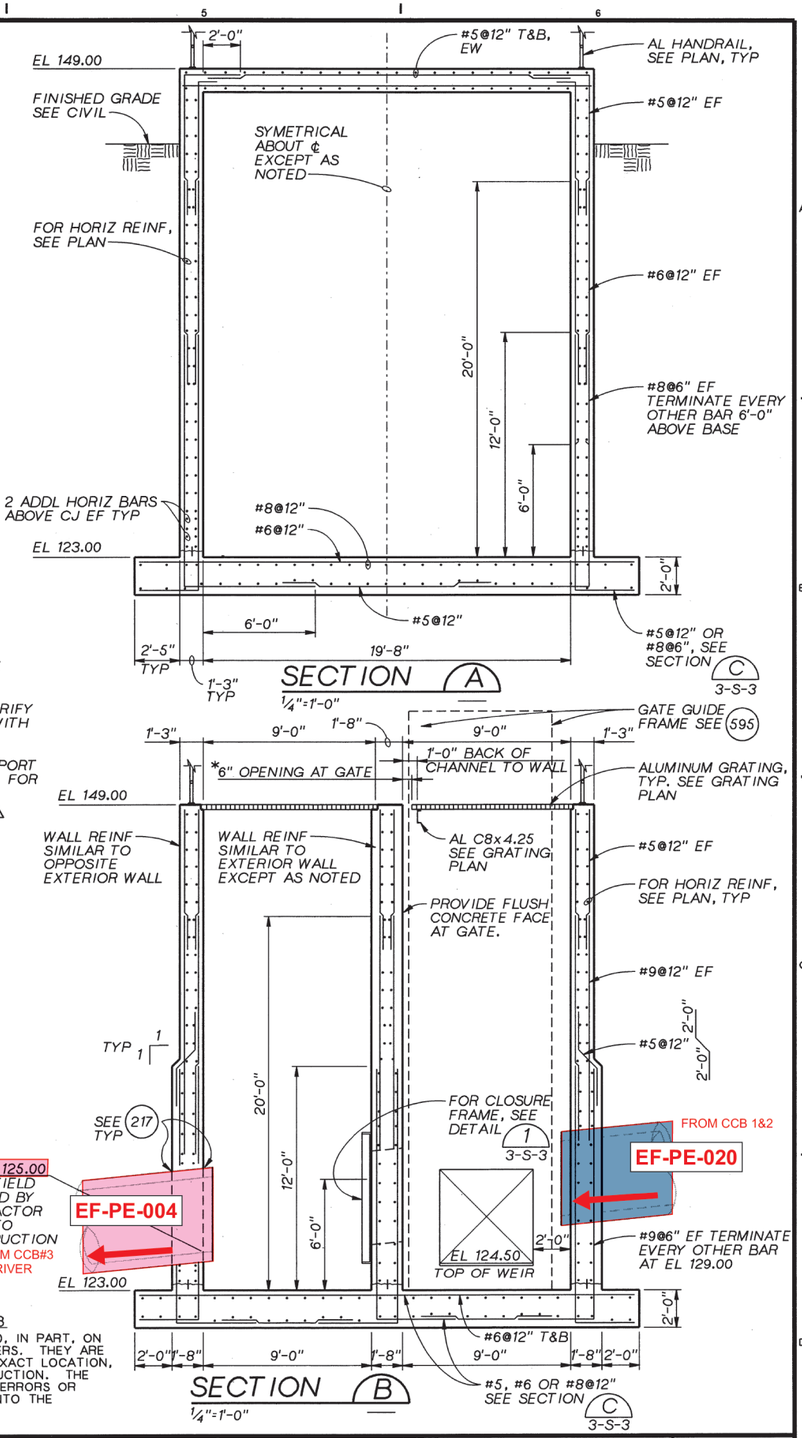

SECTION A
1/4"=1'-0"

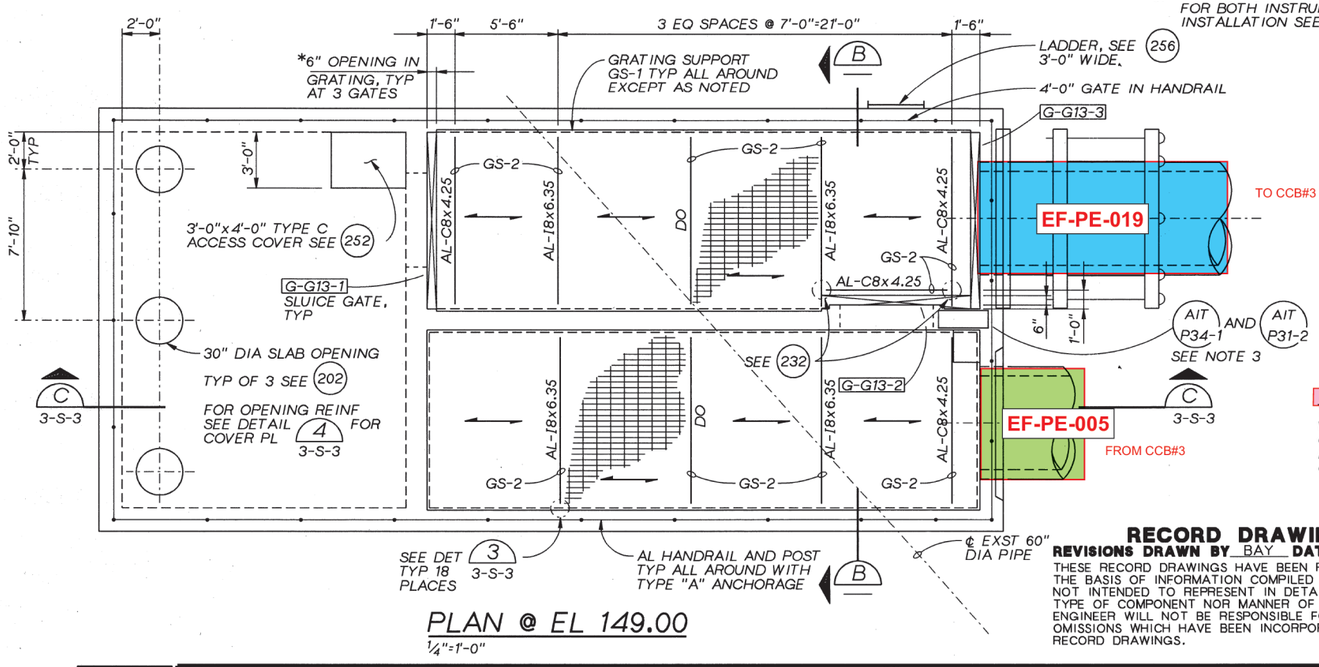

PLAN @ EL 149.00
1/4"=1'-0"

SECTION B
1/4"=1'-0"

RECORD DRAWINGS
REVISIONS DRAWN BY BAY **DATE** 7/1993

THESE RECORD DRAWINGS HAVE BEEN PREPARED, IN PART, ON THE BASIS OF INFORMATION COMPILED BY OTHERS. THEY ARE NOT INTENDED TO REPRESENT IN DETAIL THE EXACT LOCATION, TYPE OF COMPONENT NOR MANNER OF CONSTRUCTION. THE ENGINEER WILL NOT BE RESPONSIBLE FOR ANY ERRORS OR OMISSIONS WHICH HAVE BEEN INCORPORATED INTO THE RECORD DRAWINGS.

NO.	DATE	REVISION	BY	APVD
-	7/93	RECORD DRAWING	BAY	RMB
2	3/8/93	CL-T-304	BAY	RMB
1	12/22/92	CL-T-275	BAY	RMB

DSGN DS CHILTON
DR JE GRAUSE
CHK GF DOTSON
APVD RM BRACKEN

REUSE OF DOCUMENTS
THIS DOCUMENT, AND THE IDEAS AND DESIGNS INCORPORATED HEREIN, AS AN INSTRUMENT OF PROFESSIONAL SERVICE, IS THE PROPERTY OF CH2M HILL AND IS NOT TO BE USED, IN WHOLE OR IN PART, FOR ANY OTHER PROJECT WITHOUT THE WRITTEN AUTHORIZATION OF CH2M HILL.
©CH2M HILL

VERIFY SCALE
BAR IS ONE INCH ON ORIGINAL DRAWING.
0 1"
IF NOT ONE INCH ON THIS SHEET, ADJUST SCALES ACCORDINGLY.

ROCK CREEK
ADVANCED WASTE TREATMENT PLANT
UNIFIED SEWERAGE AGENCY
WASHINGTON COUNTY, OREGON

TERTIARY COMPLEX
STRUCTURAL
OUTFALL DIVERSION STRUCTURE PLANS AND SECTIONS

SHEET 32
DWG NO. 3-S-2
DATE NOV 1990
PROJ NO. PDX21262.M1

DATE: 10/31/90 VERSION NO. X
DGN NAME: I:/P21262/M1/STRUCT/RC3S003.DGN

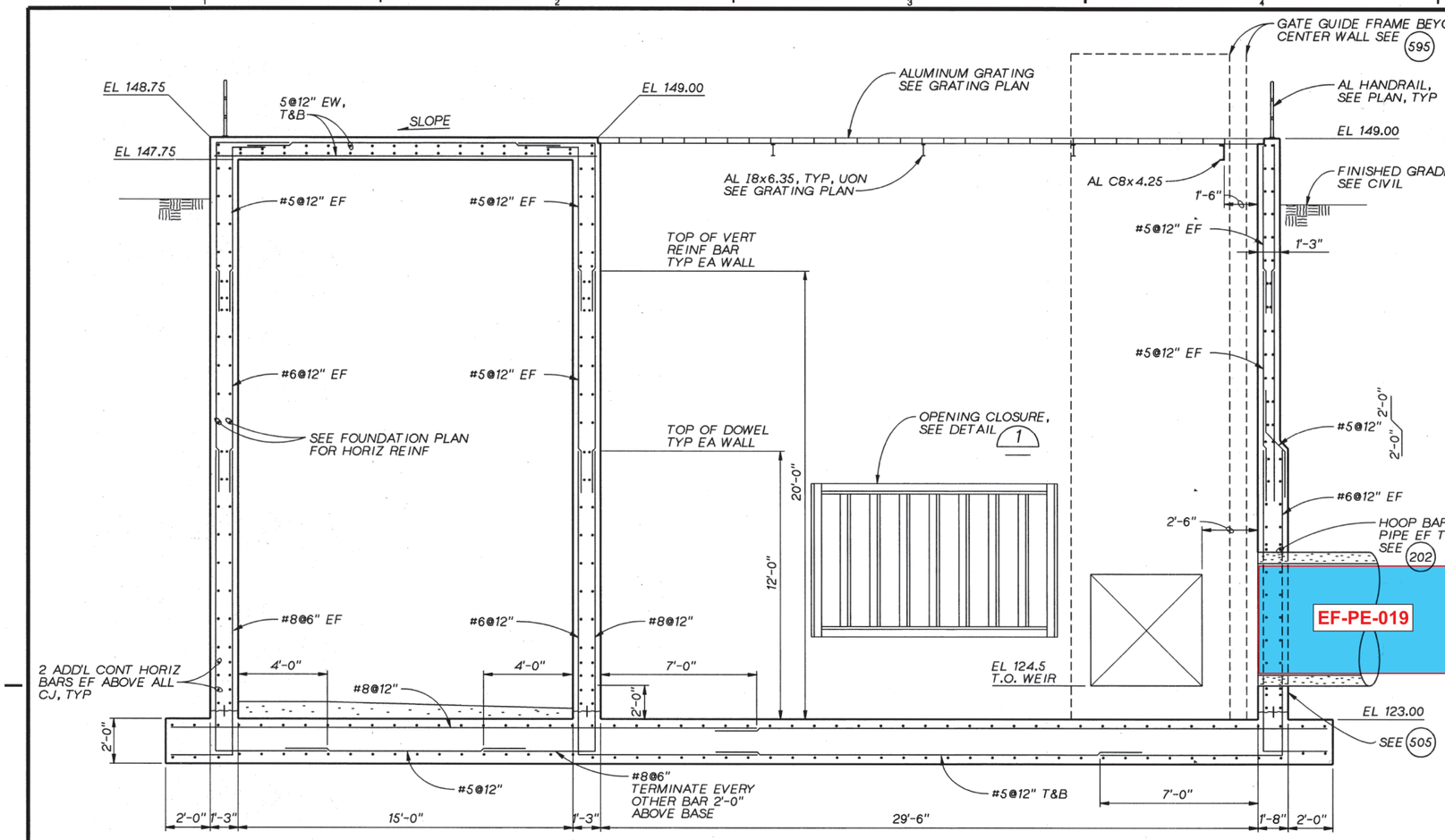

SECTION (C)
3/8"=1'-0" 3-S-2

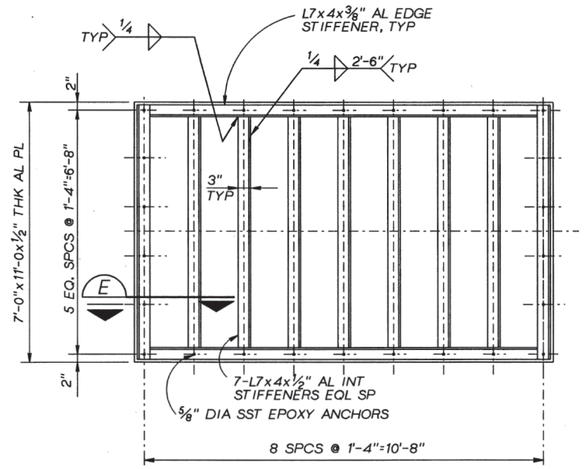

DETAIL (1)
1/2"=1'-0"

SECTION (E)
1 1/2"=1'-0"

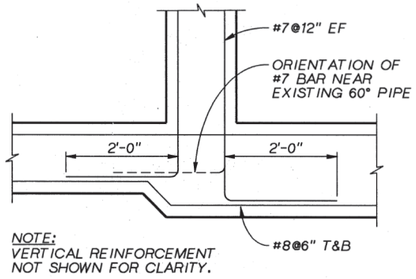

NOTE:
VERTICAL REINFORCEMENT NOT SHOWN FOR CLARITY.

DETAIL (2)
3/4"=1'-0" 3-S-2

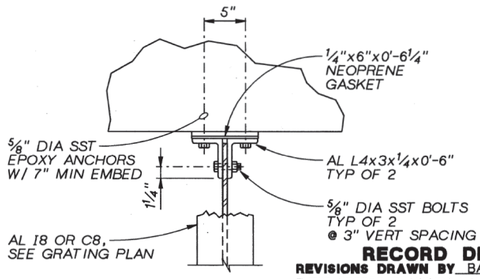

DETAIL (3)
NTS 3-S-2

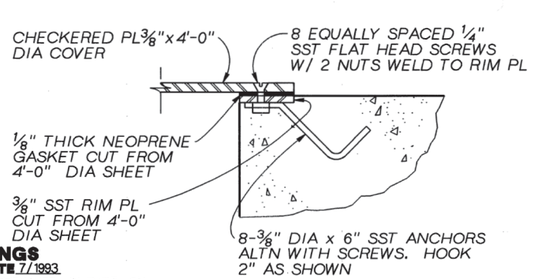

DETAIL (4)
NTS 3-S-2

RECORD DRAWINGS
REVISIONS DRAWN BY BAY **DATE** 7/1993

THESE RECORD DRAWINGS HAVE BEEN PREPARED, IN PART, ON THE BASIS OF INFORMATION COMPILED BY OTHERS. THEY ARE NOT INTENDED TO REPRESENT IN DETAIL THE EXACT LOCATION, TYPE OF COMPONENT NOR MANNER OF CONSTRUCTION. THE ENGINEER WILL NOT BE RESPONSIBLE FOR ANY ERRORS OR OMISSIONS WHICH HAVE BEEN INCORPORATED INTO THE RECORD DRAWINGS.

GENERAL NOTES:

1. THE CONTRACTOR SHALL DESIGN AND INSTALL PIPE SUPPORTS TO ALLOW EXISTING PIPE TO REMAIN IN SERVICE, AND SPAN THE CONSTRUCTION SITE TO ALLOW THE NEW CONSTRUCTION TO PROCEED. IF PIPE SUPPORTS ARE REQUIRED IN THE AREA OF NEW SLAB, THE CONTRACTOR SHALL SUBMIT DETAILS FOR REVIEW SHOWING HOW THE "AS SHOWN" SLAB WILL BE CONSTRUCTED.
2. CLEAN SURFACE OF EXISTING PIPE WITH SANDBLAST OR MECHANICAL WIRE BRUSH TO TIGHT SEAL AND BOND. WATER WASH PRIOR TO CONCRETE POUR AROUND PIPE.
3. CUT AND REMOVE EXISTING 60" DIA PIPE FOLLOWING COMPLETION OF DIVERSION STRUCTURE AND GRIND ENDS SMOOTH. SEAL DIVIDER WALL WATER-TIGHT WITH ALUMINUM CLOSURE PLATE AS SHOWN. SEE SPECIFICATIONS SECTION 01040, SCHEDULE AND SEQUENCE OF CONSTRUCTION FOR RESTRICTIONS THAT APPLY TO TEMPORARY PLANT SHUTDOWN.
4. FOR GRATING DETAILS SEE (251).
5. FOR HANDRAIL DETAILS SEE (237) AND (238).
6. CONTRACTOR SHALL VERIFY GRATING OPENING SIZE WITH GATE MANUFACTURER.
7. DESIGN LIVE LOAD ON GRATING 100 PSF.
8. ALL REINFORCING STEEL BENT 90° SHALL HAVE A 2'-0" MINIMUM EXTENSION EXCEPT AS NOTED.

CH2MHILL

DSGN	DS CHILTON
DR	RC383 JE GRAUSE
CHK	GF DOTSON
APVD	RM BRACKEN

NO.	DATE	REVISION	BY	APVD
-	7/93	RECORD DRAWING	BAY	RMB

REUSE OF DOCUMENTS
THIS DOCUMENT, AND THE IDEAS AND DESIGNS INCORPORATED HEREIN, AS AN INSTRUMENT OF PROFESSIONAL SERVICE, IS THE PROPERTY OF CH2M HILL AND IS NOT TO BE USED, IN WHOLE OR IN PART, FOR ANY OTHER PROJECT WITHOUT THE WRITTEN AUTHORIZATION OF CH2M HILL.
©CH2M HILL

VERIFY SCALE
BAR IS ONE INCH ON ORIGINAL DRAWING.
0 1"
IF NOT ONE INCH ON THIS SHEET, ADJUST SCALES ACCORDINGLY.

ROCK CREEK
ADVANCED WASTE TREATMENT PLANT
UNIFIED SEWERAGE AGENCY
WASHINGTON COUNTY, OREGON

TERTIARY COMPLEX
STRUCTURAL
OUTFALL DIVERSION STRUCTURE SECTIONS AND DETAILS

SHEET	33
DWG NO.	3-S-3
DATE	NOV 1990
PROJ NO.	PDX21262.M1

DATE: 01/10/91 VERSION NO. X
DGN NAME: I:/P21262/M1/XXXX/21262C09.DGN

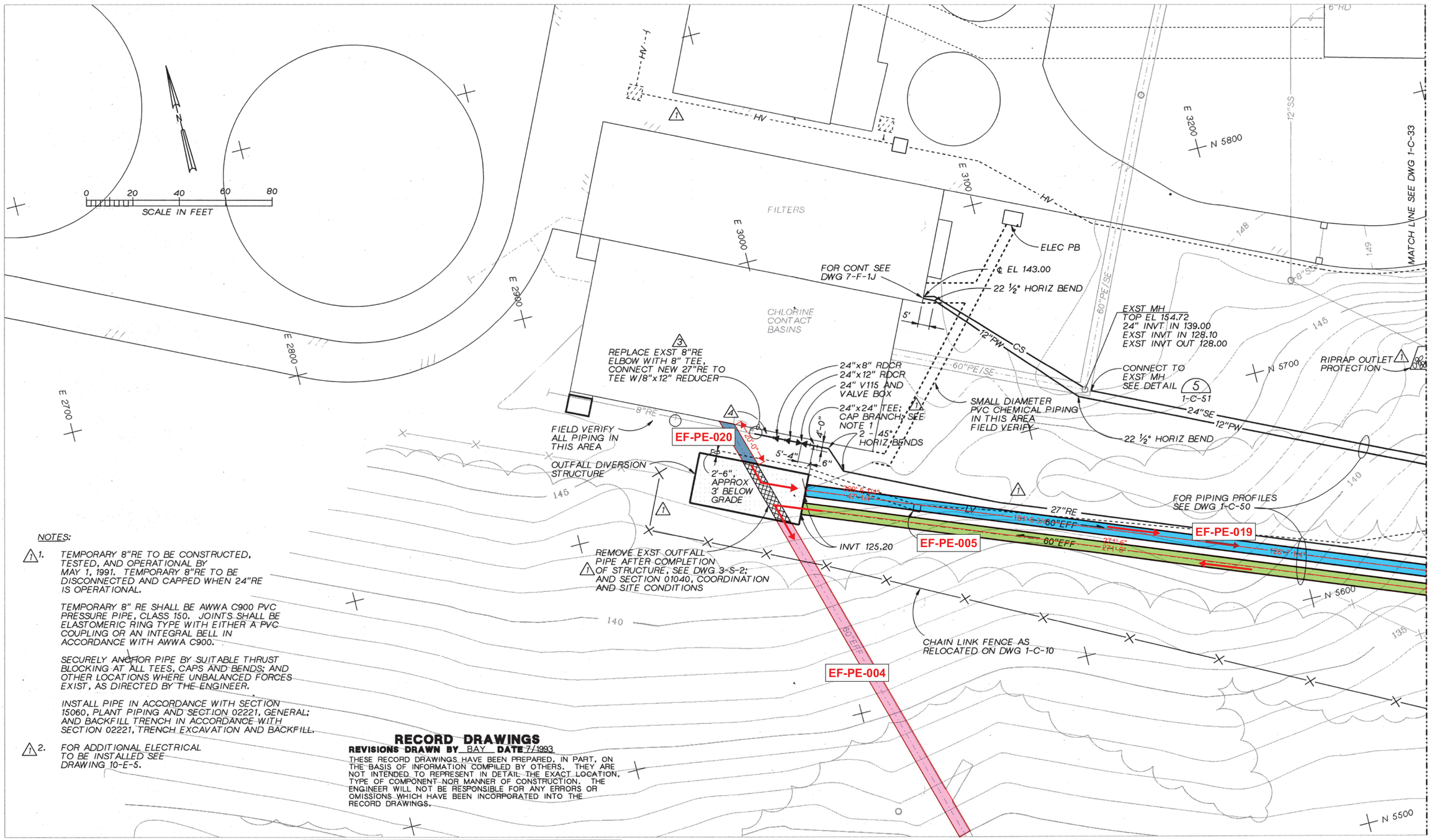

NOTES:

1. TEMPORARY 8"RE TO BE CONSTRUCTED, TESTED, AND OPERATIONAL BY MAY 1, 1991. TEMPORARY 8"RE TO BE DISCONNECTED AND CAPPED WHEN 24"RE IS OPERATIONAL.

   TEMPORARY 8" RE SHALL BE AWWA C900 PVC PRESSURE PIPE, CLASS 150. JOINTS SHALL BE ELASTOMERIC RING TYPE WITH EITHER A PVC COUPLING OR AN INTEGRAL BELL IN ACCORDANCE WITH AWWA C900.

   SECURELY ANCHOR PIPE BY SUITABLE THRUST BLOCKING AT ALL TEES, CAPS AND BENDS; AND OTHER LOCATIONS WHERE UNBALANCED FORCES EXIST, AS DIRECTED BY THE ENGINEER.

   INSTALL PIPE IN ACCORDANCE WITH SECTION 15060, PLANT PIPING AND SECTION 02221, GENERAL; AND BACKFILL TRENCH IN ACCORDANCE WITH SECTION 02221, TRENCH EXCAVATION AND BACKFILL.

2. FOR ADDITIONAL ELECTRICAL TO BE INSTALLED SEE DRAWING 10-E-5.

RECORD DRAWINGS
REVISIONS DRAWN BY BAY **DATE** 7/1993
THESE RECORD DRAWINGS HAVE BEEN PREPARED, IN PART, ON THE BASIS OF INFORMATION COMPILED BY OTHERS. THEY ARE NOT INTENDED TO REPRESENT IN DETAIL THE EXACT LOCATION, TYPE OF COMPONENT NOR MANNER OF CONSTRUCTION. THE ENGINEER WILL NOT BE RESPONSIBLE FOR ANY ERRORS OR OMISSIONS WHICH HAVE BEEN INCORPORATED INTO THE RECORD DRAWINGS.

NO.	DATE	REVISION	BY	APVD
–	7/93	RECORD DRAWING	BAY	RMB
4	11/92	CL-T-263	BAY	RMB
3	10/92	CL-T-261	BAY	RMB
2	1/92	CL-T-157A	BAY	RMB
1	1/91	ADDENDUM NO.4	WBW	RMB

CH2M HILL

DSGN WB WAGNER
DR LG McCALL
CHK WG SWANSON
APVD RM BRACKEN

REUSE OF DOCUMENTS
THIS DOCUMENT, AND THE IDEAS AND DESIGNS INCORPORATED HEREIN, AS AN INSTRUMENT OF PROFESSIONAL SERVICE, IS THE PROPERTY OF CH2M HILL AND IS NOT TO BE USED, IN WHOLE OR IN PART, FOR ANY OTHER PROJECT WITHOUT THE WRITTEN AUTHORIZATION OF CH2M HILL.
©CH2M HILL

VERIFY SCALE
BAR IS ONE INCH ON ORIGINAL DRAWING.
0 1"
IF NOT ONE INCH ON THIS SHEET, ADJUST SCALES ACCORDINGLY.

ROCK CREEK
ADVANCED WASTE TREATMENT PLANT
UNIFIED SEWERAGE AGENCY
WASHINGTON COUNTY, OREGON

TERTIARY COMPLEX
CIVIL
YARD PIPING PLAN

SHEET 24
DWG NO. 1-C-34
DATE NOV 1990
PROJ NO. PDX21262.M1

DATE: 01/11/91 VERSION NO. X
DGN NAME: I:/P21262/M1/XXXX/21262C08.DGN

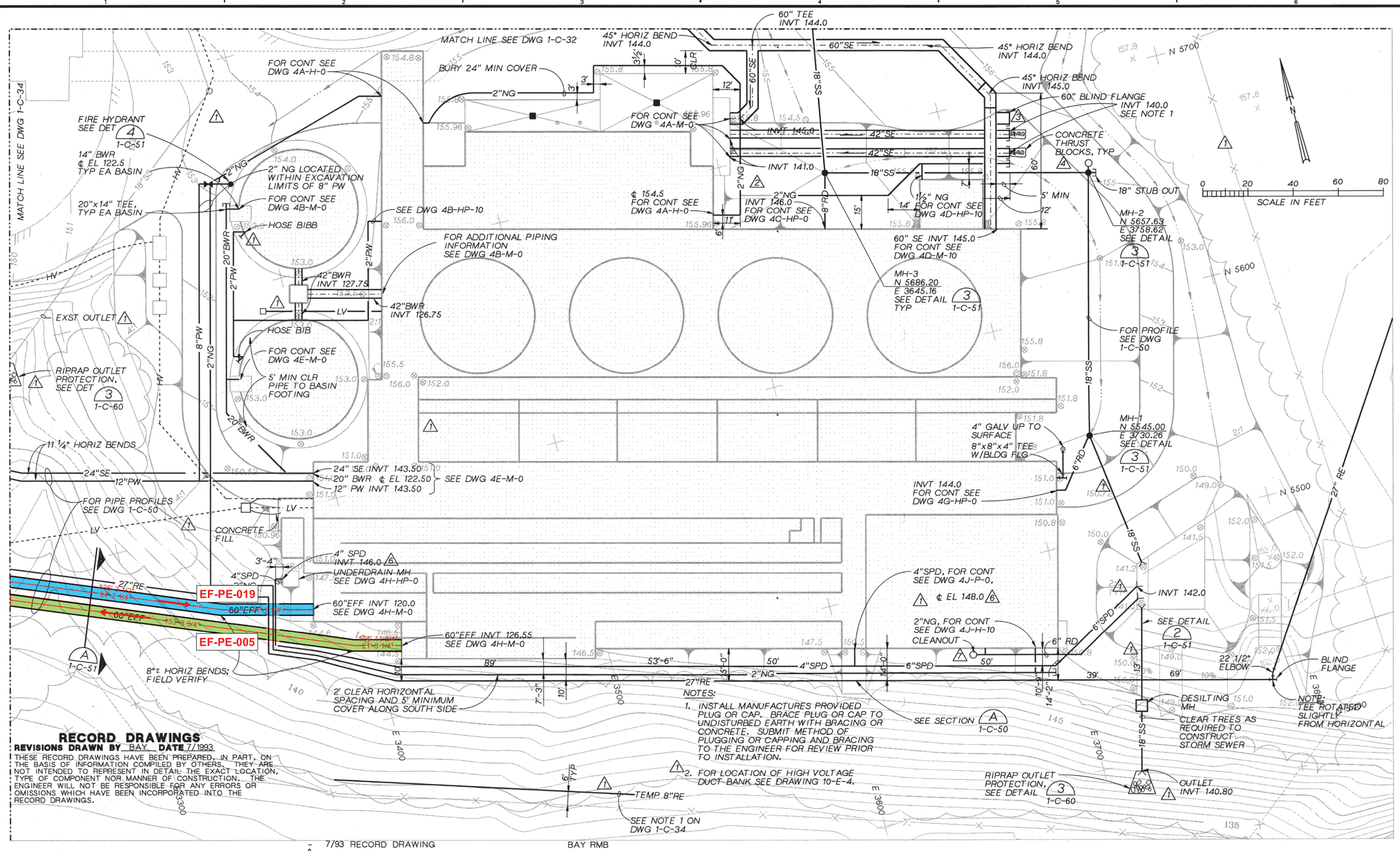

RECORD DRAWINGS
REVISIONS DRAWN BY BAY **DATE** 7/1993
THESE RECORD DRAWINGS HAVE BEEN PREPARED, IN PART, ON THE BASIS OF INFORMATION COMPILED BY OTHERS. THEY ARE NOT INTENDED TO REPRESENT IN DETAIL THE EXACT LOCATION, TYPE OF COMPONENT NOR MANNER OF CONSTRUCTION. THE ENGINEER WILL NOT BE RESPONSIBLE FOR ANY ERRORS OR OMISSIONS WHICH HAVE BEEN INCORPORATED INTO THE RECORD DRAWINGS.

NO.	DATE	REVISION	BY	APVD
–	7/93	RECORD DRAWING	BAY	RMB
A	1/93	CL-T-266		

DSGN WB WAGNER
DR LG McCALL
CHK WG SWANSON
APVD RM BRACKEN

NO.	DATE	REVISION	BY	APVD
3	6/91	CL-T-77	WBW	RMB
2	6/91	CL-T-64A		
1	1/91	ADDENDUM NO.4		
6	1/93	CL-T-283		
5	9/92	CL-T-251		
4	9/91	CL-T-120		

REUSE OF DOCUMENTS
THIS DOCUMENT, AND THE IDEAS AND DESIGNS INCORPORATED HEREIN, AS AN INSTRUMENT OF PROFESSIONAL SERVICE, IS THE PROPERTY OF CH2M HILL AND IS NOT TO BE USED, IN WHOLE OR IN PART, FOR ANY OTHER PROJECT WITHOUT THE WRITTEN AUTHORIZATION OF CH2M HILL.
©CH2M HILL

VERIFY SCALE
BAR IS ONE INCH ON ORIGINAL DRAWING.
0 1"
IF NOT ONE INCH ON THIS SHEET, ADJUST SCALES ACCORDINGLY.

ROCK CREEK
ADVANCED WASTE TREATMENT PLANT
UNIFIED SEWERAGE AGENCY
WASHINGTON COUNTY, OREGON

TERTIARY COMPLEX
CIVIL
YARD PIPING PLAN

SHEET 23
DWG NO. 1-C-33
DATE NOV 1990
PROJ NO. PDX21262.M1

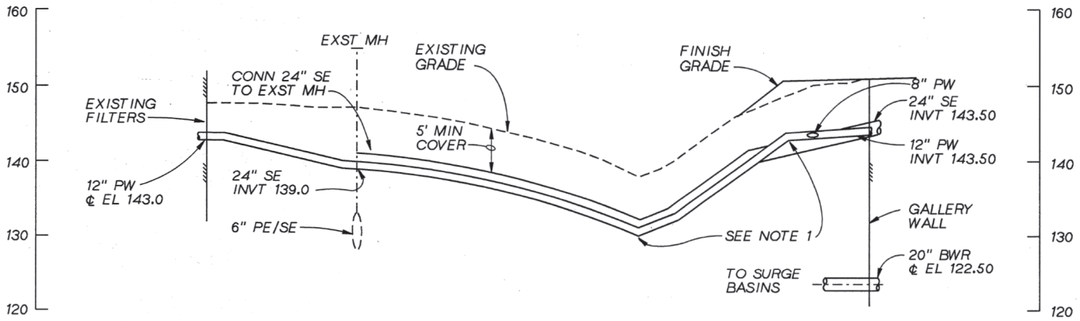

PROFILE 24" SE/12" PW

1"=40' HORIZ
1"=10' VERT
SEE DWGS 1-C-33, 1-C-34

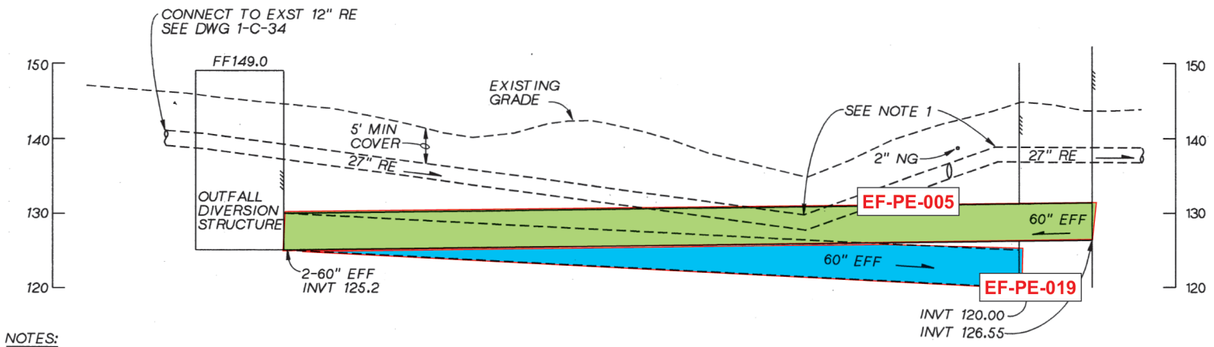

NOTES:

1. CONTRACTOR TO PROVIDE FITTINGS, OR DEFLECT JOINTS TO ONE-HALF THE ALLOWABLE DEFLECTION LISTED IN THE MANUFACTURERS PUBLICATION, TO MAKE SLOPE CHANGES IN BURIED PIPING.

PROFILE 2-60" EFF/27" RE

1"=40' HORIZ
1"=10' VERT
SEE DWGS 1-C-33, 1-C-34

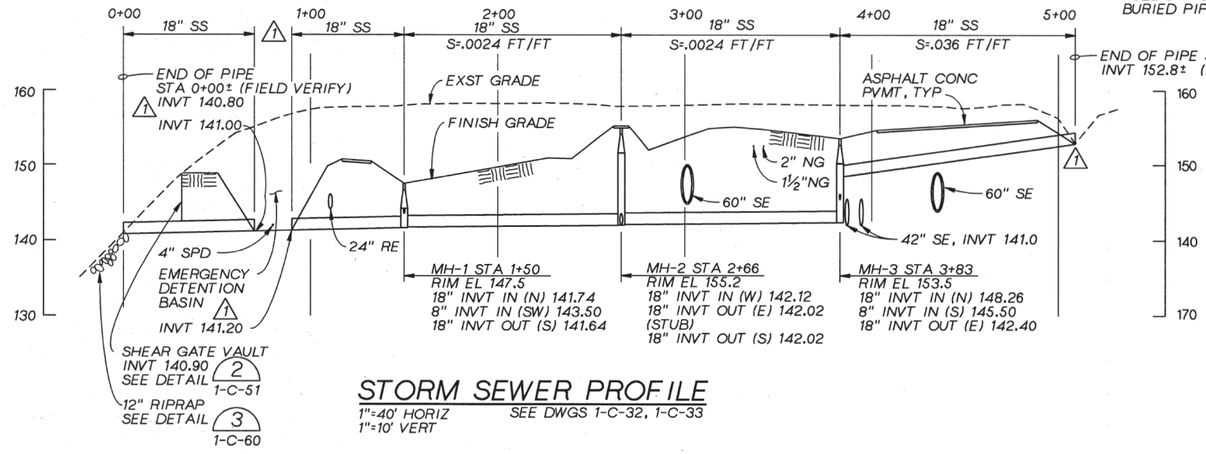

STORM SEWER PROFILE

1"=40' HORIZ
1"=10' VERT
SEE DWGS 1-C-32, 1-C-33

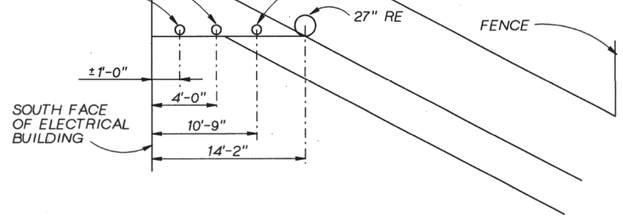

SECTION A

NTS
1-C-33

RECORD DRAWINGS
REVISIONS DRAWN BY BAY **DATE** 7/1993

THESE RECORD DRAWINGS HAVE BEEN PREPARED, IN PART, ON THE BASIS OF INFORMATION COMPILED BY OTHERS. THEY ARE NOT INTENDED TO REPRESENT IN DETAIL THE EXACT LOCATION, TYPE OF COMPONENT NOR MANNER OF CONSTRUCTION. THE ENGINEER WILL NOT BE RESPONSIBLE FOR ANY ERRORS OR OMISSIONS WHICH HAVE BEEN INCORPORATED INTO THE RECORD DRAWINGS.

CH2M HILL

DSGN	CR SEELYE
DR	MT POPKEN
CHK	WE SWANSON
APVD	RM BRACKEN

NO.	DATE	REVISION	BY	APVD
1	7/93	RECORD DRAWING	BAY	RMB
	1/91	ADDENDUM NO.4	WBW	RMB

REUSE OF DOCUMENTS
THIS DOCUMENT, AND THE IDEAS AND DESIGNS INCORPORATED HEREIN, AS AN INSTRUMENT OF PROFESSIONAL SERVICE, IS THE PROPERTY OF CH2M HILL AND IS NOT TO BE USED, IN WHOLE OR IN PART, FOR ANY OTHER PROJECT WITHOUT THE WRITTEN AUTHORIZATION OF CH2M HILL.
©CH2M HILL

VERIFY SCALE
BAR IS ONE INCH ON ORIGINAL DRAWING.
0 1"
IF NOT ONE INCH ON THIS SHEET, ADJUST SCALES ACCORDINGLY.

ROCK CREEK
ADVANCED WASTE TREATMENT PLANT
UNIFIED SEWERAGE AGENCY
WASHINGTON COUNTY, OREGON

TERTIARY COMPLEX
CIVIL

YARD PIPING PROFILES

SHEET	28
DWG NO.	1-C-50
DATE	NOV 1990
PROJ NO.	PDX21262.M1

DATE: 6/28/93 VERSION NO. 1
DGN NAME: /M2/MECH/RC4HM000.DGN

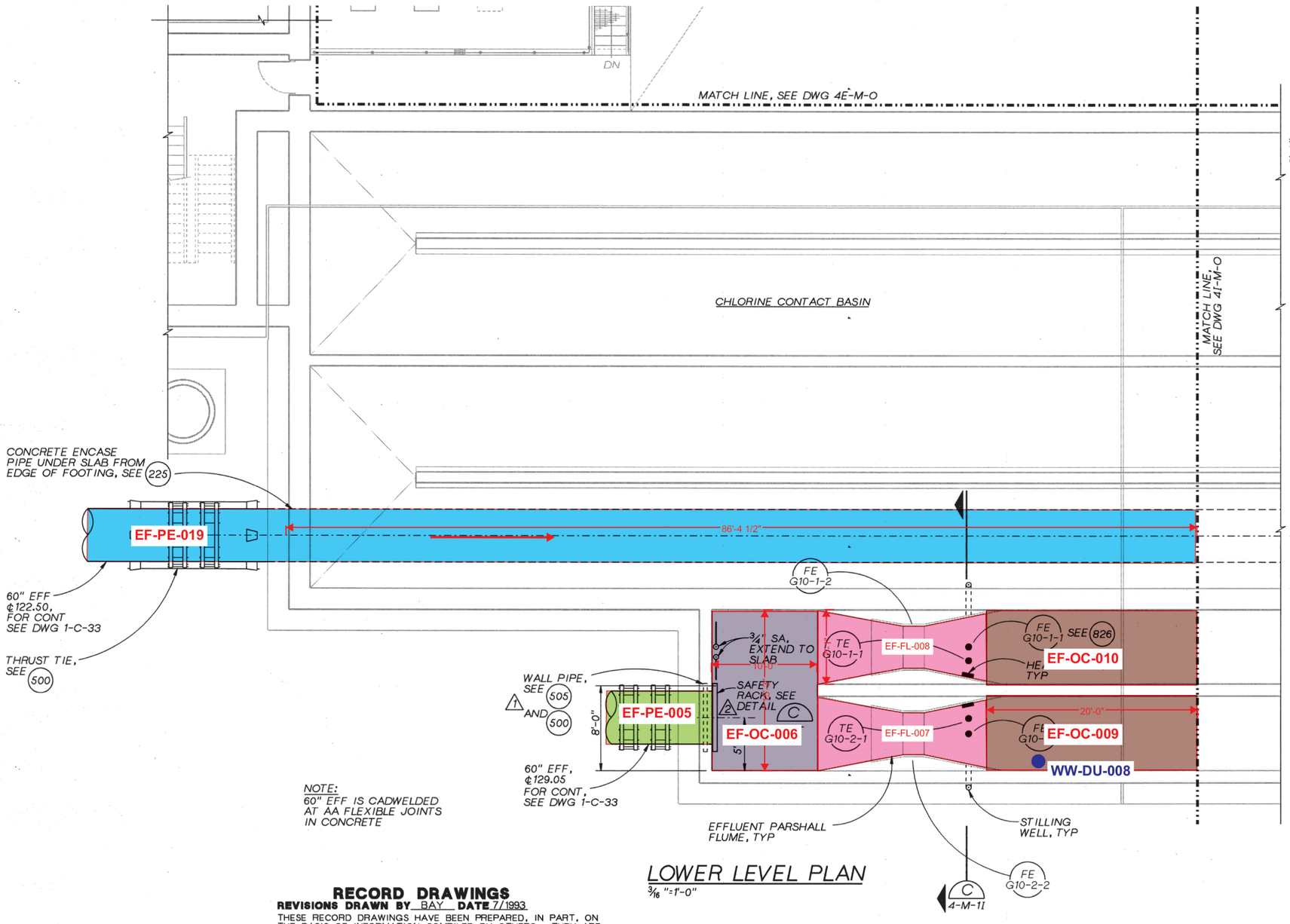

NOTE:
60" EFF IS CADWELDED AT AA FLEXIBLE JOINTS IN CONCRETE

LOWER LEVEL PLAN
3/16"=1'-0"

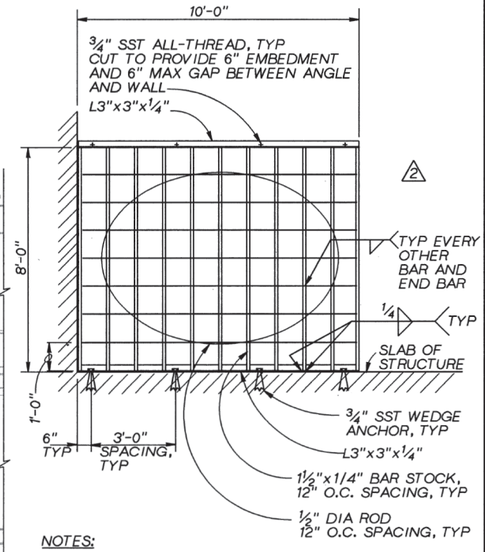

NOTES:
1. PAINT RACK PER PAINT SYSTEM NO. 2
2. THIS RACK IS FOR THE 60" OUTFALL PIPE ON SOUTH WALL OF OUTFALL DIVERSION STRUCTURE. THE RACK FOR THE 60" EFF AT THE PARSHAL FLUME IS SIMILAR -
   OVERALL DIMENSIONS: 6'-0" X 6'-0";
   PROVIDE FOUR SST WEDGE ANCHORS - TWO TO ANCHOR TO FLOOR AND TWO ANCHOR TO WALL.
   MOUNT 60" EFF RACK FLUSH TO WALL.

SAFETY RACK DETAIL 1
3-S-2

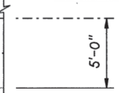

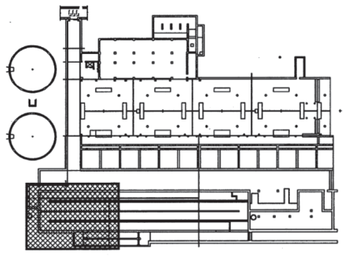

RECORD DRAWINGS
REVISIONS DRAWN BY BAY **DATE** 7/1993

THESE RECORD DRAWINGS HAVE BEEN PREPARED, IN PART, ON THE BASIS OF INFORMATION COMPILED BY OTHERS. THEY ARE NOT INTENDED TO REPRESENT IN DETAIL THE EXACT LOCATION, TYPE OF COMPONENT NOR MANNER OF CONSTRUCTION. THE ENGINEER WILL NOT BE RESPONSIBLE FOR ANY ERRORS OR OMISSIONS WHICH HAVE BEEN INCORPORATED INTO THE RECORD DRAWINGS.

CH2M HILL

DSGN	P MUELLER
DR	KL MCCOY
CHK	E SEEGMUELLER
APVD	RM BRACKEN

NO.	DATE	REVISION	BY	APVD
-	7/93	RECORD DRAWING	BAY	RMB
2	12/92	CL-T-275		
1	6/91	CL-T-65		

REUSE OF DOCUMENTS
THIS DOCUMENT, AND THE IDEAS AND DESIGNS INCORPORATED HEREIN, AS AN INSTRUMENT OF PROFESSIONAL SERVICE, IS THE PROPERTY OF CH2M HILL AND IS NOT TO BE USED, IN WHOLE OR IN PART, FOR ANY OTHER PROJECT WITHOUT THE WRITTEN AUTHORIZATION OF CH2M HILL.
©CH2M HILL

VERIFY SCALE
BAR IS ONE INCH ON ORIGINAL DRAWING.
0 1"
IF NOT ONE INCH ON THIS SHEET, ADJUST SCALES ACCORDINGLY.

ROCK CREEK
ADVANCED WASTE TREATMENT PLANT
UNIFIED SEWERAGE AGENCY
WASHINGTON COUNTY, OREGON

TERTIARY COMPLEX
MECHANICAL
LOWER LEVEL PLAN H

SHEET	147
DWG NO.	4H-M-0
DATE	NOV 1990
PROJ NO.	PDX21262.M1

DATE: 10/31/90 VERSION NO. 2
DGN NAME: I:/P21262/M1/STRUCT/RC4S03I.DGN

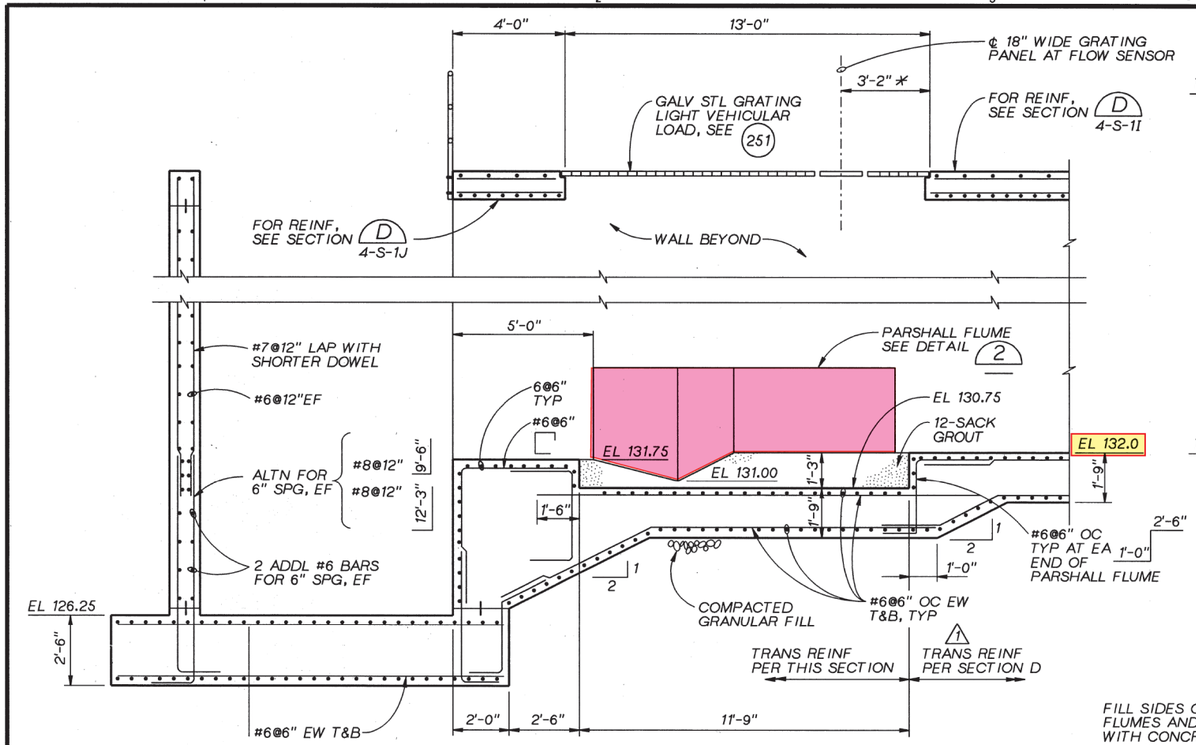

NOTE:
* COORDINATE WITH ELECTRICAL.

SECTION (C)
3/8"=1'-0" 4H-S-0 4H-S-10

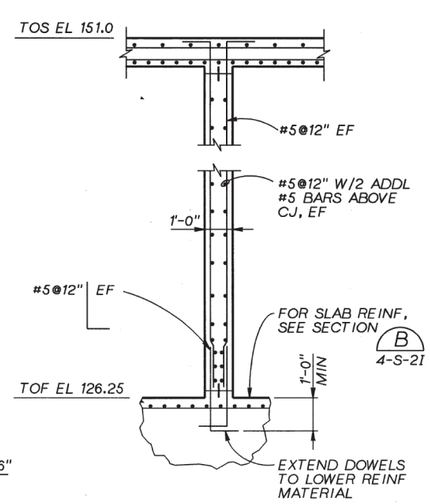

SECTION (E)
3/8" =1'-0" 4J-S-0 4J-S-10

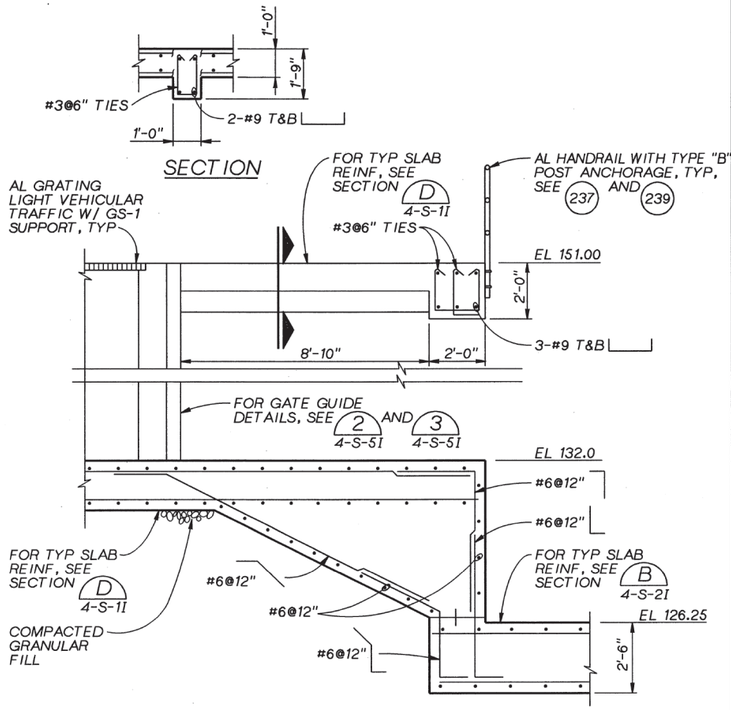

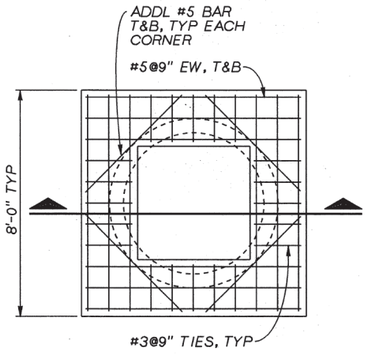

LID PLAN

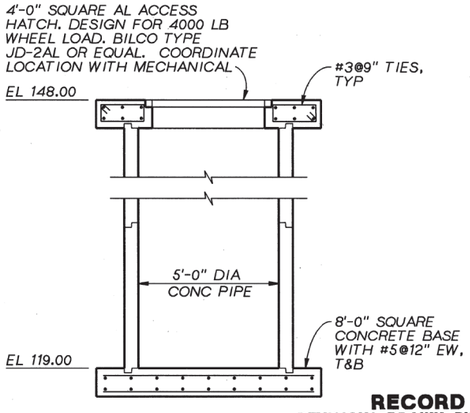

SECTION

UNDERDRAIN SUMP DETAIL (1)
3/8"=1'-0" 4I-S-0

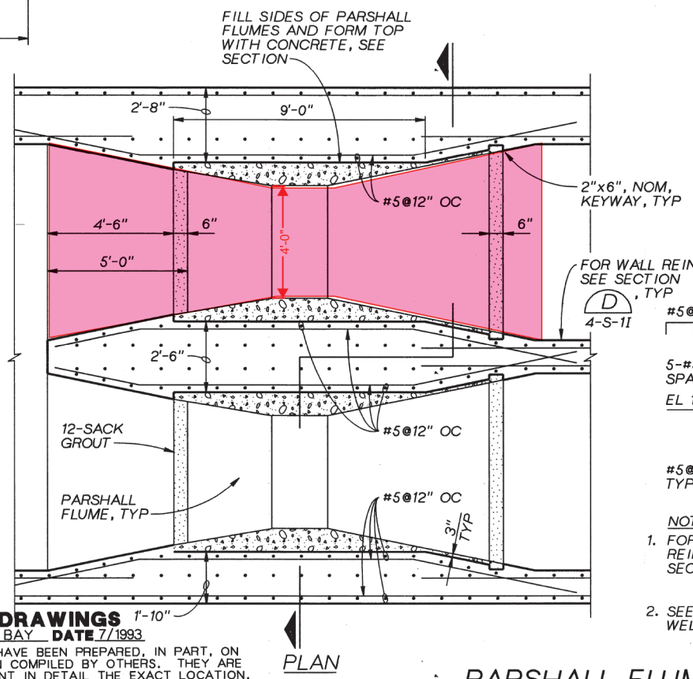

PLAN

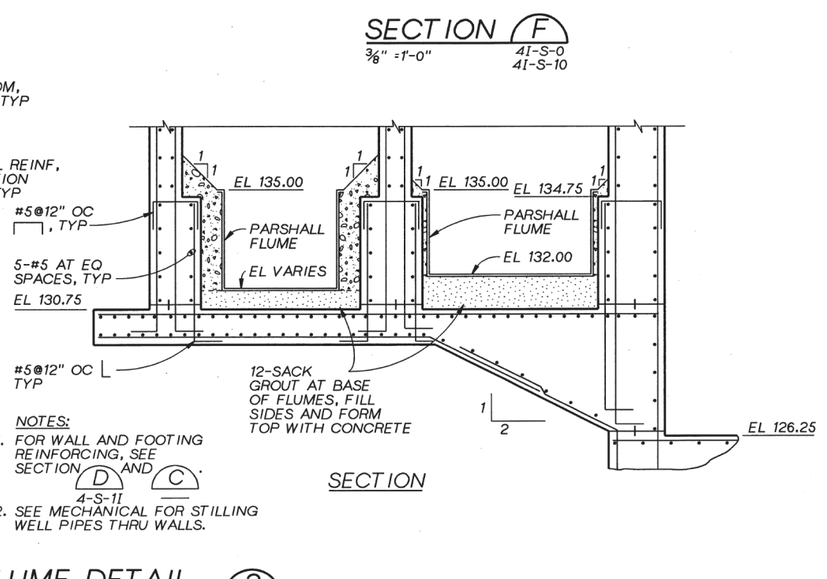

SECTION

PARSHALL FLUME DETAIL (2)
3/8"=1'-0" 4H-S-0

RECORD DRAWINGS
REVISIONS DRAWN BY BAY **DATE** 7/1993
THESE RECORD DRAWINGS HAVE BEEN PREPARED, IN PART, ON THE BASIS OF INFORMATION COMPILED BY OTHERS. THEY ARE NOT INTENDED TO REPRESENT IN DETAIL THE EXACT LOCATION, TYPE OF COMPONENT NOR MANNER OF CONSTRUCTION. THE ENGINEER WILL NOT BE RESPONSIBLE FOR ANY ERRORS OR OMISSIONS WHICH HAVE BEEN INCORPORATED INTO THE RECORD DRAWINGS.

CH2M HILL

DSGN RS ALBIN
DR LA BAXTER
CHK D HORNING
APVD RM BRACKEN

NO.	DATE	REVISION	BY	APVD
-	7/93	RECORD DRAWING	BAY	RMB
1	7/91	PHONE MEMO 7/31/91	JBL	JBL

REUSE OF DOCUMENTS
THIS DOCUMENT, AND THE IDEAS AND DESIGNS INCORPORATED HEREIN, AS AN INSTRUMENT OF PROFESSIONAL SERVICE, IS THE PROPERTY OF CH2M HILL AND IS NOT TO BE USED, IN WHOLE OR IN PART, FOR ANY OTHER PROJECT WITHOUT THE WRITTEN AUTHORIZATION OF CH2M HILL.
©CH2M HILL

VERIFY SCALE
BAR IS ONE INCH ON ORIGINAL DRAWING.
0 1"
IF NOT ONE INCH ON THIS SHEET, ADJUST SCALES ACCORDINGLY.

ROCK CREEK
ADVANCED WASTE TREATMENT PLANT
UNIFIED SEWERAGE AGENCY
WASHINGTON COUNTY, OREGON

TERTIARY COMPLEX
STRUCTURAL
CHLORINE CONTACT BASINS
SECTIONS AND DETAILS

SHEET 122
DWG NO. 4-S-3I
DATE NOV 1990
PROJ NO. PDX21262.M1

DATE: 6/28/93 VERSION NO. 1
DGN NAME:/M2/MECH/RC4IM000.DGN

GATE SCHEDULE

P&ID NUMBER	GATE NUMBER	LOCATION	REFERENCE DRAWING	GATE OPENING WIDTH (INCHES)	GATE OPENING HEIGHT (INCHES)	GATE OPENING INVERT ELEVATION (FT) (SEE NOTE 1)	SLIDE GATE HEIGHT (INCHES)	DESIGN OPERATING HEAD: GATE INVT TO MAX WATER SURFACE (FEET)	DESIGN OPERATING HEAD: CONDITION (SEE NOTE 2)	OPERATOR TYPE	GATE TYPE, FRAME TYPE, MOUNTING, AND MISC. COMMENTS
10-I-3	G-T1-1	SECONDARY EFFLUENT DISTRIBUTION BOX	3-S-1	72	48	151.00	60	4.00	S/US	MANUAL	WEIR GATE, STYLE B, CONVENTIONAL DOWNWARD ACTING, WEIR CREST TRAVEL EL 151.00 TO 155.00
10-I-8	G-F1-1	FILTER INFLUENT BOX	4D-M-10	96	72	145.00	72	6.00	S/US	MANUAL	SLIDE GATE, STYLE A, CHANNEL MOUNTED, FLUSH BOTTOM, EXTENDED STEM FOR REMOTE LOCATED CRANK
10-I-8	G-F1-2	FILTER OVERFLOW/BYPASS CHANNEL	4G-M-10	24	90	143.00	90	7.50	S	MANUAL	SLIDE GATE, STYLE A, CHANNEL MOUNTED, FLUSH BOTTOM, EXTENDED STEM FOR REMOTE LOCATED CRANK
10-I-8	G-F1-3	FILTER INFLUENT CHANNEL	4G-M-10	48	90	143.00	90	7.50	S	MANUAL	SLIDE GATE, STYLE A, CHANNEL MOUNTED, FLUSH BOTTOM
10-I-10	G-F8-3	SURGE BASIN DISTRIBUTION BOX	4B-M-0	42 (ROUND)	42 (ROUND)	127.75		26.00	S/US	MANUAL	SLUICE GATE, FLANGED FRAME, MOUNTED ON EMBEDDED "E" THIMBLE
10-I-10	G-F8-4	SURGE BASIN DISTRIBUTION BOX	4B-M-0	42 (ROUND)	42 (ROUND)	127.75		26.00	S/US	MANUAL	SLUICE GATE, FLANGED FRAME, MOUNTED ON EMBEDDED "E" THIMBLE
10-I-11	G-G10-1	EFFLUENT FLUME	4I-M-0	72	48	132.00	48	4.00	S	MANUAL	SLIDE GATE, STYLE A, CHANNEL MOUNTED, FLUSH BOTTOM
10-I-11	G-G10-2	EFFLUENT FLUME	4I-M-0	72	48	132.00	48	4.00	S	MANUAL	SLIDE GATE, STYLE A, CHANNEL MOUNTED, FLUSH BOTTOM
10-I-11	G-G13-1	OUTFALL DIVERSION STRUCTURE	3-S-2	60	60	124.50		22.00	S	MANUAL	SLUICE GATE, FLANGED FRAME, MOUNTED ON EMBEDDED "E" THIMBLE
10-I-11	G-G13-2	OUTFALL DIVERSION STRUCTURE	3-S-2	54	54	124.50		22.00	S/US	MANUAL	SLUICE GATE, FLANGED FRAME, MOUNTED ON EMBEDDED "E" THIMBLE
10-I-11	G-G13-3	OUTFALL DIVERSION STRUCTURE	3-S-2	60 (ROUND)	60 (ROUND)	125.20		22.00	S/US	MANUAL	SLUICE GATE, FLANGED FRAME, MOUNTED ON EMBEDDED "E" THIMBLE

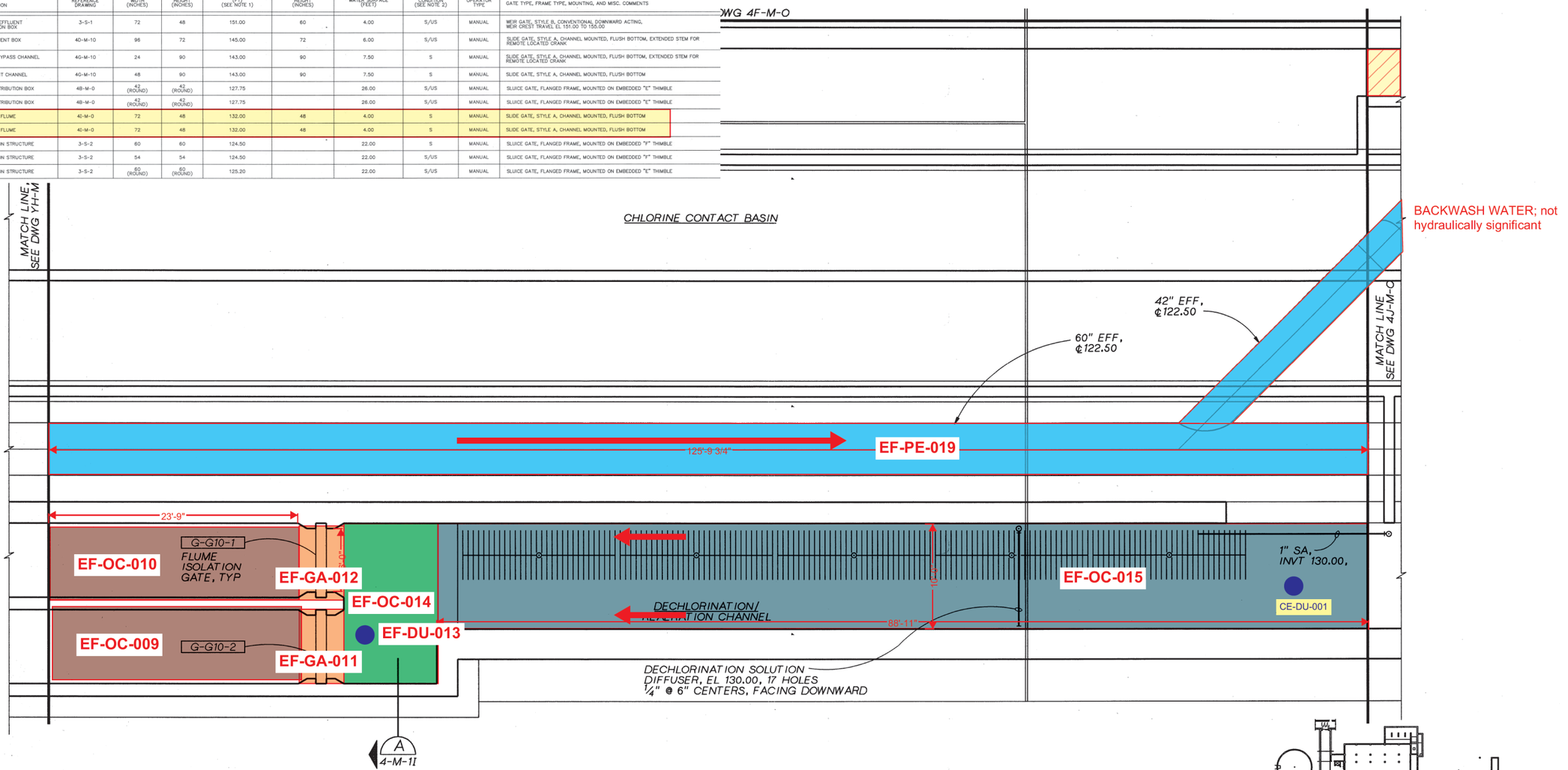

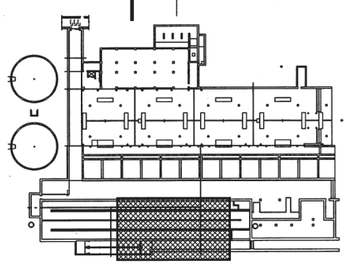

LOWER LEVEL PLAN

3/16 "=1'-0"

RECORD DRAWINGS
REVISIONS DRAWN BY BAY **DATE** 7/1993

THESE RECORD DRAWINGS HAVE BEEN PREPARED, IN PART, ON THE BASIS OF INFORMATION COMPILED BY OTHERS. THEY ARE NOT INTENDED TO REPRESENT IN DETAIL THE EXACT LOCATION, TYPE OF COMPONENT NOR MANNER OF CONSTRUCTION. THE ENGINEER WILL NOT BE RESPONSIBLE FOR ANY ERRORS OR OMISSIONS WHICH HAVE BEEN INCORPORATED INTO THE RECORD DRAWINGS.

CH2M HILL

DSGN	P MUELLER
DR	KL MCCOY
CHK	E SEEGMUELLER
APVD	RM BRACKEN

NO.	DATE	REVISION	BY	APVD
-	7/93	RECORD DRAWING	BAY	RMB

REUSE OF DOCUMENTS
THIS DOCUMENT, AND THE IDEAS AND DESIGNS INCORPORATED HEREIN, AS AN INSTRUMENT OF PROFESSIONAL SERVICE, IS THE PROPERTY OF CH2M HILL AND IS NOT TO BE USED, IN WHOLE OR IN PART, FOR ANY OTHER PROJECT WITHOUT THE WRITTEN AUTHORIZATION OF CH2M HILL.
©CH2M HILL

VERIFY SCALE
BAR IS ONE INCH ON ORIGINAL DRAWING.
0 1"
IF NOT ONE INCH ON THIS SHEET, ADJUST SCALES ACCORDINGLY.

ROCK CREEK
ADVANCED WASTE TREATMENT PLANT
UNIFIED SEWERAGE AGENCY
WASHINGTON COUNTY, OREGON

TERTIARY COMPLEX
MECHANICAL
LOWER LEVEL
PLAN I

SHEET	148
DWG NO.	4I-M-0
DATE	NOV 1990
PROJ NO.	PDX21262.M1

DATE: 6/28/93 VERSION NO.12
DGN NAME: /M2/MECH/RC4JM000.DGN

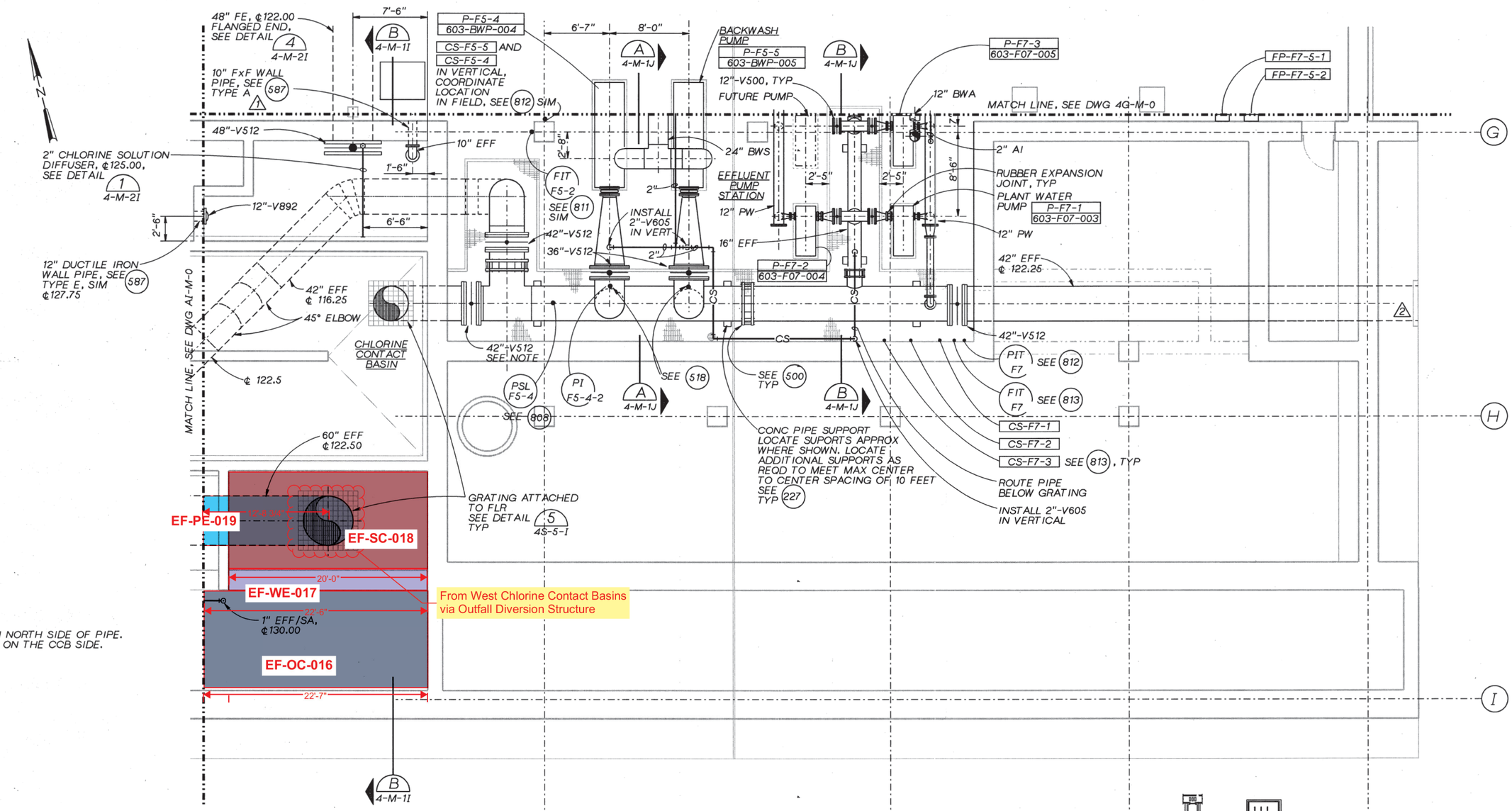

NOTE:
OPERATOR SET ON NORTH SIDE OF PIPE.
SEAT OF VALVE IS ON THE CCB SIDE.

RECORD DRAWINGS

REVISIONS DRAWN BY BAY **DATE** 7/1993

THESE RECORD DRAWINGS HAVE BEEN PREPARED, IN PART, ON THE BASIS OF INFORMATION COMPILED BY OTHERS. THEY ARE NOT INTENDED TO REPRESENT IN DETAIL THE EXACT LOCATION, TYPE OF COMPONENT NOR MANNER OF CONSTRUCTION. THE ENGINEER WILL NOT BE RESPONSIBLE FOR ANY ERRORS OR OMISSIONS WHICH HAVE BEEN INCORPORATED INTO THE RECORD DRAWINGS.

LOWER LEVEL PLAN

3/16"=1'-0"

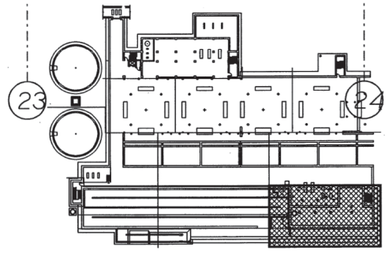

CH2M HILL

DSGN	J HAYES/P MUELLER
DR	KA ANDERSEN
CHK	E SEEGMUELLLER
APVD	RM BRACKEN

NO.	DATE	REVISION	BY	APVD
-	7/93	RECORD DRAWING	BAY	RMB
2	10/91	CL-T-148		
1	1/91	ADDENDUM NO. 4		

REUSE OF DOCUMENTS
THIS DOCUMENT, AND THE IDEAS AND DESIGNS INCORPORATED HEREIN, AS AN INSTRUMENT OF PROFESSIONAL SERVICE, IS THE PROPERTY OF CH2M HILL AND IS NOT TO BE USED, IN WHOLE OR IN PART, FOR ANY OTHER PROJECT WITHOUT THE WRITTEN AUTHORIZATION OF CH2M HILL.
©CH2M HILL

VERIFY SCALE
BAR IS ONE INCH ON ORIGINAL DRAWING.
0 1"
IF NOT ONE INCH ON THIS SHEET, ADJUST SCALES ACCORDINGLY.

ROCK CREEK
ADVANCED WASTE TREATMENT PLANT
UNIFIED SEWERAGE AGENCY
WASHINGTON COUNTY, OREGON

TERTIARY COMPLEX
MECHANICAL
LOWER LEVEL
PLAN J

SHEET	149
DWG NO.	4J-M-0
DATE	NOV 1990
PROJ NO.	PDX21262.M1

DATE: 11/01/90 VERSION NO. X
DGN NAME: I:/P21262/M1/STRUCT/RC4JS000.DGN

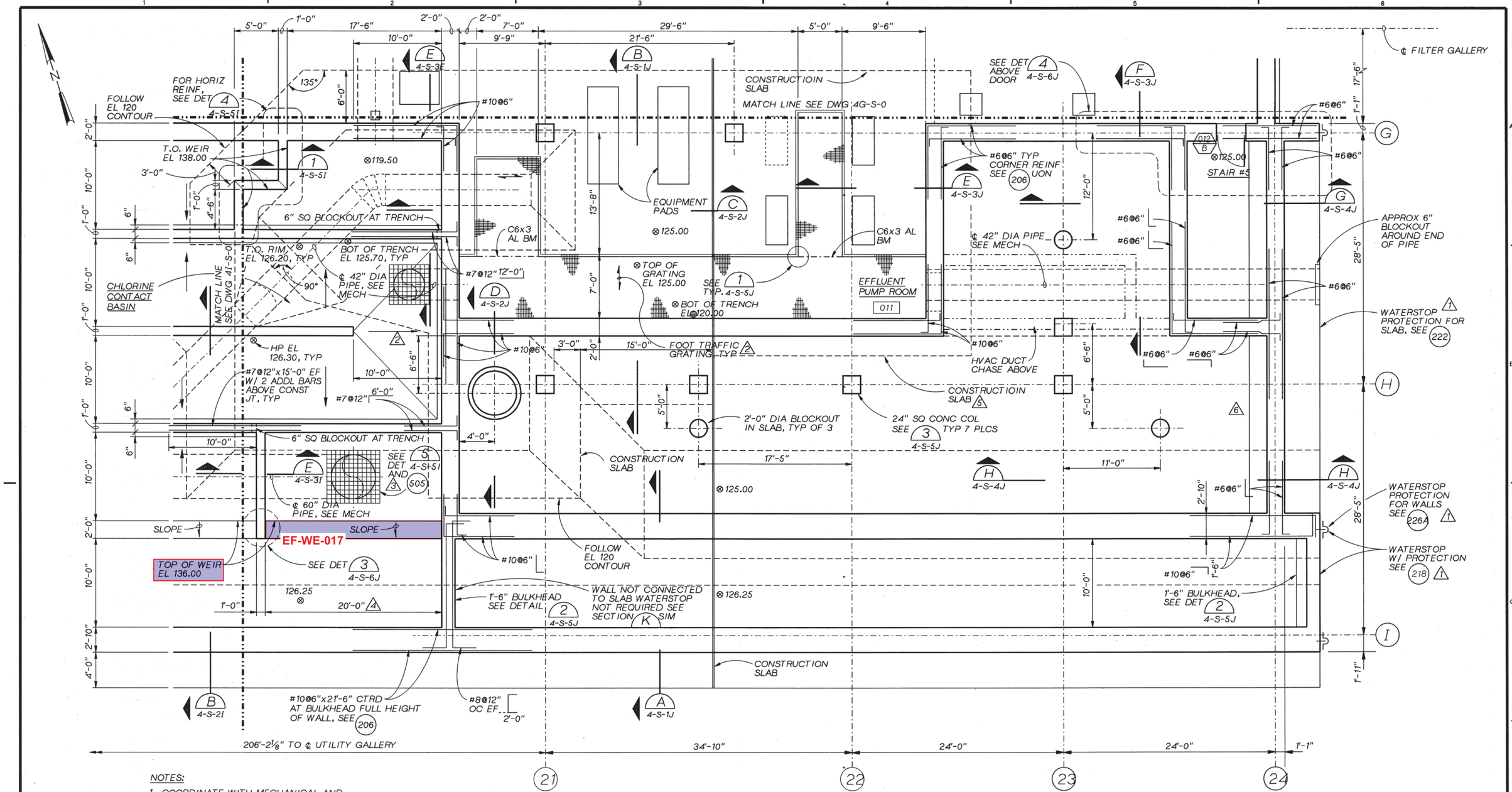

NOTES:

1. COORDINATE WITH MECHANICAL AND ELECTRICAL FOR EQUIPMENT PAD AND PENETRATION SIZES/LOCATIONS.
2. BOTTOM MAT OF REBAR PLACED PARALLEL AND PERPENDICULAR TO EXCAVATION SLOPE FOR 42" EFF PIIPE.

FOUNDATION PLAN

3/16" = 1'-0"

RECORD DRAWINGS
REVISIONS DRAWN BY BAY **DATE** 7/1993

THESE RECORD DRAWINGS HAVE BEEN PREPARED, IN PART, ON THE BASIS OF INFORMATION COMPILED BY OTHERS. THEY ARE NOT INTENDED TO REPRESENT IN DETAIL THE EXACT LOCATION, TYPE OF COMPONENT NOR MANNER OF CONSTRUCTION. THE ENGINEER WILL NOT BE RESPONSIBLE FOR ANY ERRORS OR OMISSIONS WHICH HAVE BEEN INCORPORATED INTO THE RECORD DRAWINGS.

NO.	DATE	REVISION	BY	APVD
-	7/93	RECORD DRAWING	BAY	RMB
1	12/05/9	CL-T-159	BAY	RMB
2	10/18/91	CL-T-142	BAY	RMB
3	10/10/91	CL-T-135	BAY	RMB
4	5/12/91	CL-T-65	BAY	RMB
5	5/12/90	ADDENDUM NO.3	BAY	RMB
6	5/14/91	CL-T-72	BAY	RMB

DSGN RS ALBIN, D CHILTON
DR D SWIGART
CHK D HORNING
APVD RM BRACKEN

CH2MHILL

REUSE OF DOCUMENTS
THIS DOCUMENT, AND THE IDEAS AND DESIGNS INCORPORATED HEREIN, AS AN INSTRUMENT OF PROFESSIONAL SERVICE, IS THE PROPERTY OF CH2M HILL AND IS NOT TO BE USED, IN WHOLE OR IN PART, FOR ANY OTHER PROJECT WITHOUT THE WRITTEN AUTHORIZATION OF CH2M HILL.
©CH2M HILL

VERIFY SCALE
BAR IS ONE INCH ON ORIGINAL DRAWING.
0 1"
IF NOT ONE INCH ON THIS SHEET, ADJUST SCALES ACCORDINGLY.

ROCK CREEK
ADVANCED WASTE TREATMENT PLANT
UNIFIED SEWERAGE AGENCY
WASHINGTON COUNTY, OREGON

TERTIARY COMPLEX
STRUCTURAL
FOUNDATION
PLAN J

SHEET 71
DWG NO. 4J-S-0
DATE NOV 1990
PROJ NO. PDX21262.M1

CE EAST CHLORINE
CONTACT BASIN

DATE: 05-NOV-90 VERSION NO. 9
DGN NAME: I:/P21262/M1/IAC/RC4I013.DGN

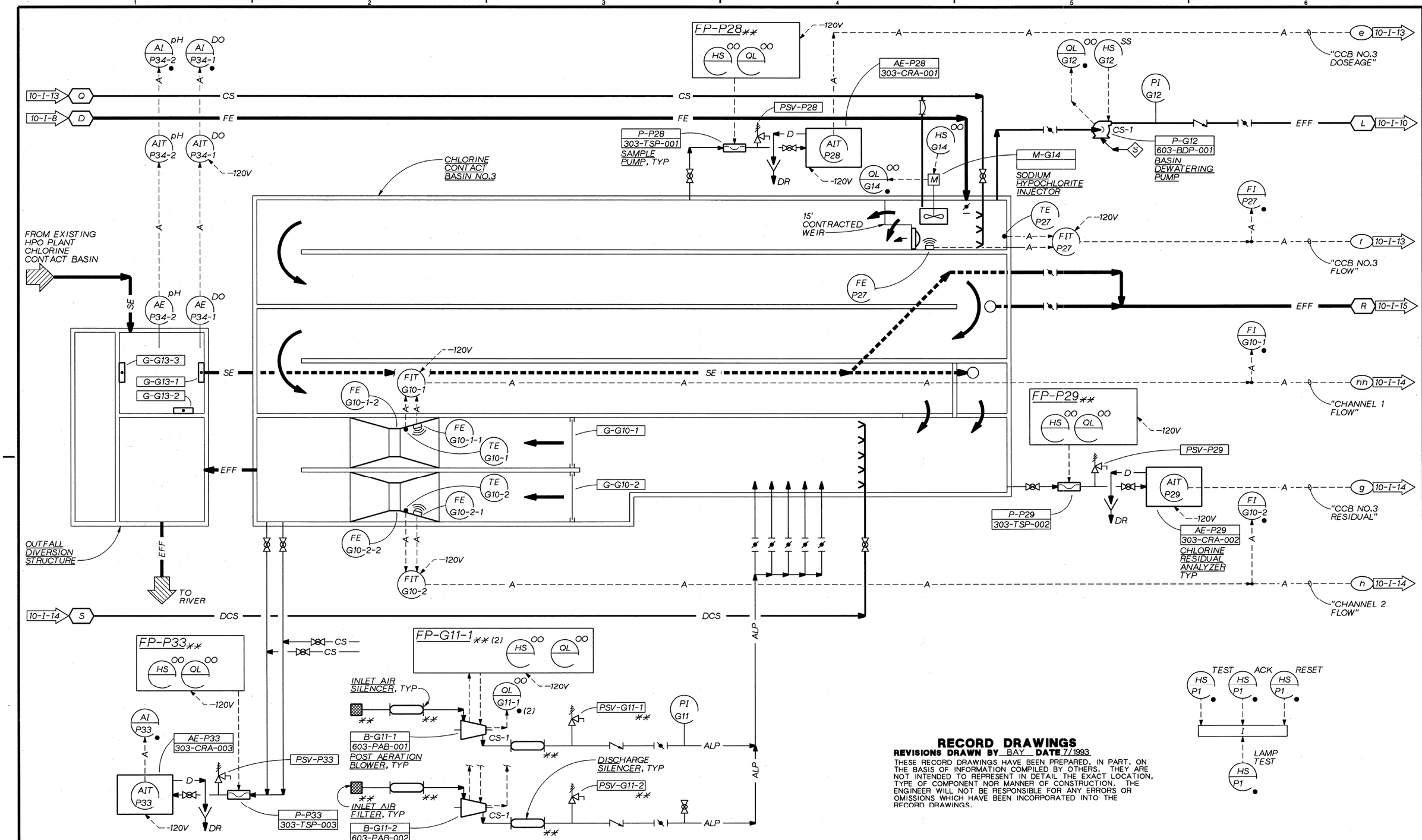

RECORD DRAWINGS

REVISIONS DRAWN BY BAY **DATE** 7/1993

THESE RECORD DRAWINGS HAVE BEEN PREPARED, IN PART, ON THE BASIS OF INFORMATION COMPILED BY OTHERS. THEY ARE NOT INTENDED TO REPRESENT IN DETAIL THE EXACT LOCATION, TYPE OF COMPONENT NOR MANNER OF CONSTRUCTION. THE ENGINEER WILL NOT BE RESPONSIBLE FOR ANY ERRORS OR OMISSIONS WHICH HAVE BEEN INCORPORATED INTO THE RECORD DRAWINGS.

CH2M HILL

DSGN	L WOOD				
DR	RC4I013 G MARSHALL				
CHK	J BLACK	-	7/93	RECORD DRAWING	BAY	RMB
APVD	RM BRACKEN	NO.	DATE	REVISION	BY	APVD

REUSE OF DOCUMENTS

THIS DOCUMENT, AND THE IDEAS AND DESIGNS INCORPORATED HEREIN, AS AN INSTRUMENT OF PROFESSIONAL SERVICE, IS THE PROPERTY OF CH2M HILL AND IS NOT TO BE USED, IN WHOLE OR IN PART, FOR ANY OTHER PROJECT WITHOUT THE WRITTEN AUTHORIZATION OF CH2M HILL.

©CH2M HILL

VERIFY SCALE
BAR IS ONE INCH ON ORIGINAL DRAWING.
0 1"
IF NOT ONE INCH ON THIS SHEET, ADJUST SCALES ACCORDINGLY.

ROCK CREEK
ADVANCED WASTE TREATMENT PLANT
UNIFIED SEWERAGE AGENCY
WASHINGTON COUNTY, OREGON

TERTIARY COMPLEX
INSTRUMENTATION AND CONTROL
PROCESS AND INSTRUMENT DIAGRAM
CHLORINE CONTACT BASIN NO.3

SHEET	365
DWG NO.	10-I-11
DATE	NOV 1990
PROJ NO.	PDX21262.M1

PLOT DATE: 09-27-91
FILE NAME: R400G010.DGN

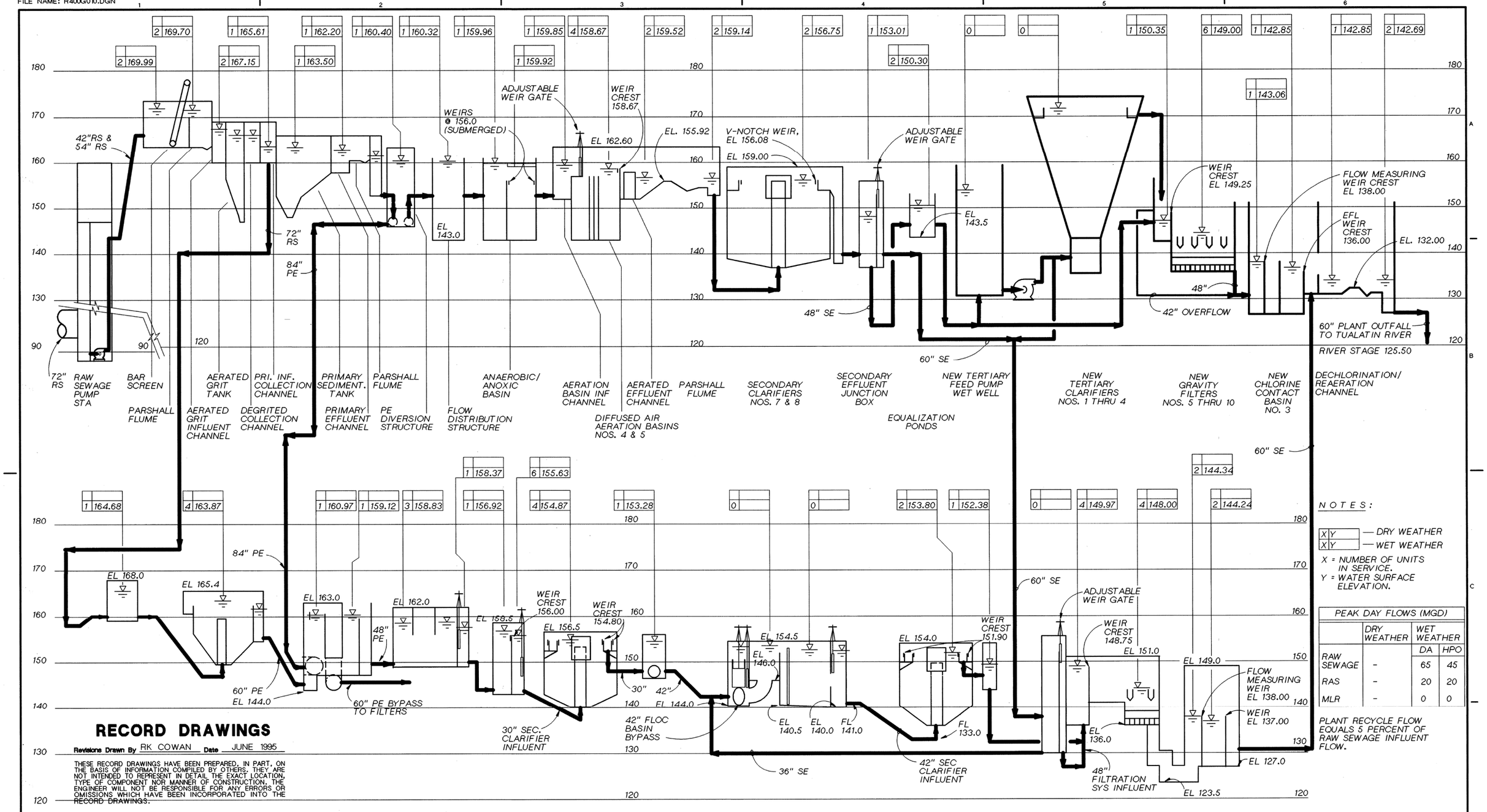

PRIMARY INFLUENT DISTRIBUTION WELL
EXISTING PRIMARY SEDIMENTATION TANK
PRIMARY EFFLUENT DISTRIBUTION STRUCTURE
HIGH PURITY OXYGEN AERATION BASINS NO.S NO.S 1, 2, & 3
SECONDARY CLARIFIER INFLUENT DISTRIB. BOX
SECONDARY CLARIFIERS NO.S 1 THRU 4 STRUCTURE
RAPID MIX BASINS NO. 1 & 2
FLOCCULATION BASINS NO. 1 & 2
SECONDARY CLARIFIERS NO.S 5 & 6
PHASE 2 INTERTIE BOX
GRAVITY FILTERS NO.S 1 THRU 4
CHLORINE CONTACT CHAMBERS NO.S 1 & 2

RECORD DRAWINGS

Revisions Drawn By RK COWAN Date JUNE 1995

THESE RECORD DRAWINGS HAVE BEEN PREPARED, IN PART, ON THE BASIS OF INFORMATION COMPILED BY OTHERS. THEY ARE NOT INTENDED TO REPRESENT IN DETAIL THE EXACT LOCATION, TYPE OF COMPONENT NOR MANNER OF CONSTRUCTION. THE ENGINEER WILL NOT BE RESPONSIBLE FOR ANY ERRORS OR OMISSIONS WHICH HAVE BEEN INCORPORATED INTO THE RECORD DRAWINGS.

N O T E S :

X|Y — DRY WEATHER
X|Y — WET WEATHER
X = NUMBER OF UNITS IN SERVICE.
Y = WATER SURFACE ELEVATION.

PEAK DAY FLOWS (MGD)			
	DRY WEATHER	WET WEATHER	
		DA	HPO
RAW SEWAGE	-	65	45
RAS	-	20	20
MLR	-	0	0

PLANT RECYCLE FLOW EQUALS 5 PERCENT OF RAW SEWAGE INFLUENT FLOW.

THE ORIGINAL DRAWING WAS STAMPED BY
ROBERT M. BRACKEN
OREGON P.E. NO.
9799

CH2MHILL

DSGN RM BRACKEN
DR KM BURTON R400G010.DGN
CHK J GAUTHIER
APVD RM BRACKEN

NO.	DATE	REVISION	BY	APVD
	07-95	RECORD DRAWING	BAY	RMB

REUSE OF DOCUMENTS
THIS DOCUMENT, AND THE IDEAS AND DESIGNS INCORPORATED HEREIN, AS AN INSTRUMENT OF PROFESSIONAL SERVICE, IS THE PROPERTY OF CH2M HILL AND IS NOT TO BE USED, IN WHOLE OR IN PART, FOR ANY OTHER PROJECT WITHOUT THE WRITTEN AUTHORIZATION OF CH2M HILL.
©CH2M HILL

VERIFY SCALE
BAR IS ONE INCH ON ORIGINAL DRAWING.
0 1"
IF NOT ONE INCH ON THIS SHEET, ADJUST SCALES ACCORDINGLY.

ROCK CREEK FACILITY
UNIFIED SEWERAGE AGENCY
WASHINGTON COUNTY, OREGON

PHASE 4 EXPANSION - SOLIDS PROCESSING
GENERAL
HYDRAULIC PROFILE 1997 PEAK DAY

SHEET 9
DWG NO. G-10
DATE DEC 1991
PROJ NO. PDX21262.W1

DATE: 6/28/93 VERSION NO. 1
DGN NAME:/M2/MECH/RC4IM000.DGN

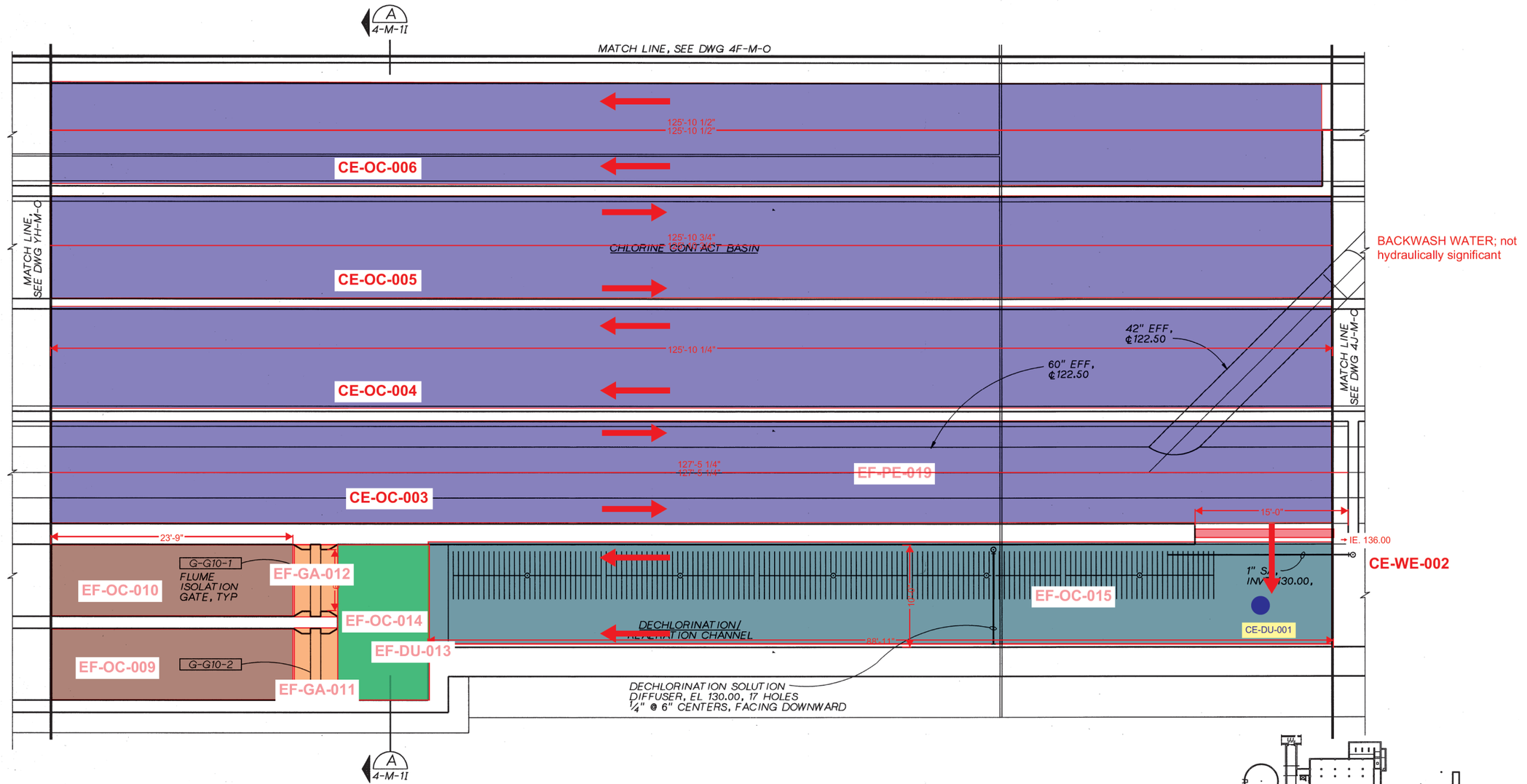

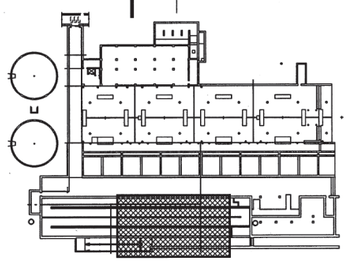

LOWER LEVEL PLAN

3/16 "=1'-0"

RECORD DRAWINGS

REVISIONS DRAWN BY BAY **DATE** 7/1993

THESE RECORD DRAWINGS HAVE BEEN PREPARED, IN PART, ON THE BASIS OF INFORMATION COMPILED BY OTHERS. THEY ARE NOT INTENDED TO REPRESENT IN DETAIL THE EXACT LOCATION, TYPE OF COMPONENT NOR MANNER OF CONSTRUCTION. THE ENGINEER WILL NOT BE RESPONSIBLE FOR ANY ERRORS OR OMISSIONS WHICH HAVE BEEN INCORPORATED INTO THE RECORD DRAWINGS.

CH2MHILL

DSGN	P. MUELLER
DR	KL MCCOY
CHK	E SEEGMUELLER
APVD	RM BRACKEN

NO.	DATE	REVISION	BY	APVD
-	7/93	RECORD DRAWING	BAY	RMB

REUSE OF DOCUMENTS
THIS DOCUMENT, AND THE IDEAS AND DESIGNS INCORPORATED HEREIN, AS AN INSTRUMENT OF PROFESSIONAL SERVICE, IS THE PROPERTY OF CH2M HILL AND IS NOT TO BE USED, IN WHOLE OR IN PART, FOR ANY OTHER PROJECT WITHOUT THE WRITTEN AUTHORIZATION OF CH2M HILL.
©CH2M HILL

VERIFY SCALE
BAR IS ONE INCH ON ORIGINAL DRAWING.
0 1"
IF NOT ONE INCH ON THIS SHEET, ADJUST SCALES ACCORDINGLY.

ROCK CREEK
ADVANCED WASTE TREATMENT PLANT
UNIFIED SEWERAGE AGENCY
WASHINGTON COUNTY, OREGON

TERTIARY COMPLEX
MECHANICAL
LOWER LEVEL PLAN I

SHEET	148
DWG NO.	4I-M-0
DATE	NOV 1990
PROJ NO.	PDX21262.M1

DATE: 6/28/93 VERSION NO. 1
DGN NAME: /M2/MECH/RC4HM000.DGN

No channel slope as per 4I-S-0

CE-OC-003 = 127.5 + 64.5 = 192 FT
CE-OC-004 = 105.75 +126 = 231.75 FT
CE-OC-005 = 126 + 64.5 = 190.5 FT
CE-OC-006 = 105.75 +126 = 231.75 FT

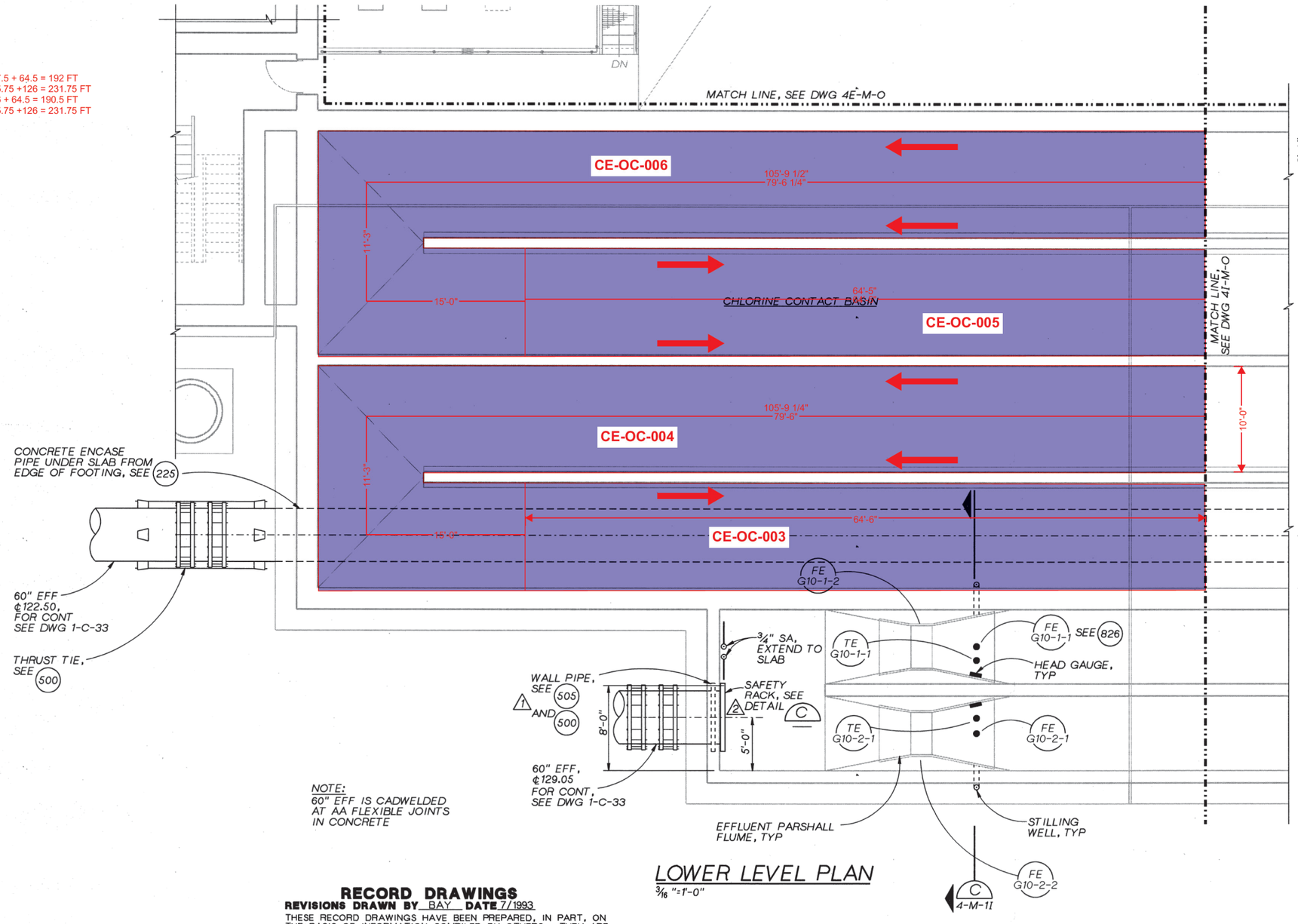

NOTE:
60" EFF IS CADWELDED AT AA FLEXIBLE JOINTS IN CONCRETE

LOWER LEVEL PLAN
3/16"=1'-0"

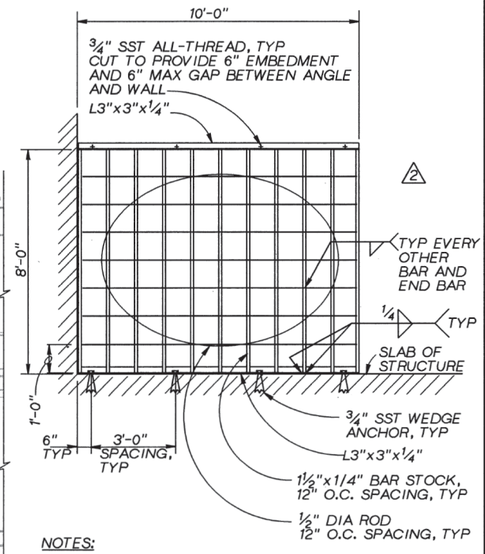

NOTES:
1. PAINT RACK PER PAINT SYSTEM NO. 2
2. THIS RACK IS FOR THE 60" OUTFALL PIPE ON SOUTH WALL OF OUTFALL DIVERSION STRUCTURE. THE RACK FOR THE 60" EFF AT THE PARSHAL FLUME IS SIMILAR - OVERALL DIMENSIONS: 6'-0" X 6'-0"; PROVIDE FOUR SST WEDGE ANCHORS - TWO TO ANCHOR TO FLOOR AND TWO ANCHOR TO WALL. MOUNT 60" EFF RACK FLUSH TO WALL.

SAFETY RACK DETAIL 1
3-S-2

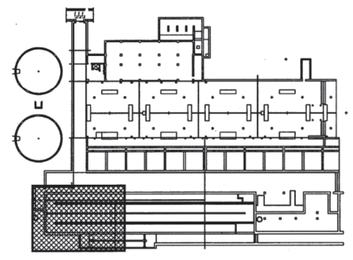

RECORD DRAWINGS
REVISIONS DRAWN BY BAY **DATE** 7/1993
THESE RECORD DRAWINGS HAVE BEEN PREPARED, IN PART, ON THE BASIS OF INFORMATION COMPILED BY OTHERS. THEY ARE NOT INTENDED TO REPRESENT IN DETAIL THE EXACT LOCATION, TYPE OF COMPONENT NOR MANNER OF CONSTRUCTION. THE ENGINEER WILL NOT BE RESPONSIBLE FOR ANY ERRORS OR OMISSIONS WHICH HAVE BEEN INCORPORATED INTO THE RECORD DRAWINGS.

CH2M HILL

DSGN	P MUELLER	-	7/93	RECORD DRAWING	BAY RMB
DR	KL MCCOY	2	12/92	CL-T-275	
CHK	E SEEGMUELLER	1	6/91	CL-T-65	
APVD	RM BRACKEN	NO.	DATE	REVISION	BY APVD

REUSE OF DOCUMENTS
THIS DOCUMENT, AND THE IDEAS AND DESIGNS INCORPORATED HEREIN, AS AN INSTRUMENT OF PROFESSIONAL SERVICE, IS THE PROPERTY OF CH2M HILL AND IS NOT TO BE USED, IN WHOLE OR IN PART, FOR ANY OTHER PROJECT WITHOUT THE WRITTEN AUTHORIZATION OF CH2M HILL.
©CH2M HILL

VERIFY SCALE
BAR IS ONE INCH ON ORIGINAL DRAWING.
0 1"
IF NOT ONE INCH ON THIS SHEET, ADJUST SCALES ACCORDINGLY.

ROCK CREEK
ADVANCED WASTE TREATMENT PLANT
UNIFIED SEWERAGE AGENCY
WASHINGTON COUNTY, OREGON

TERTIARY COMPLEX
MECHANICAL
LOWER LEVEL
PLAN H

SHEET	147
DWG NO.	4H-M-0
DATE	NOV 1990
PROJ NO.	PDX21262.M1

DATE: 6/28/93 VERSION NO.12
DGN NAME: /M2/MECH/RC4JM000.DGN

ADDITIONAL FILTER EFFLUENT LINE INTO CCB

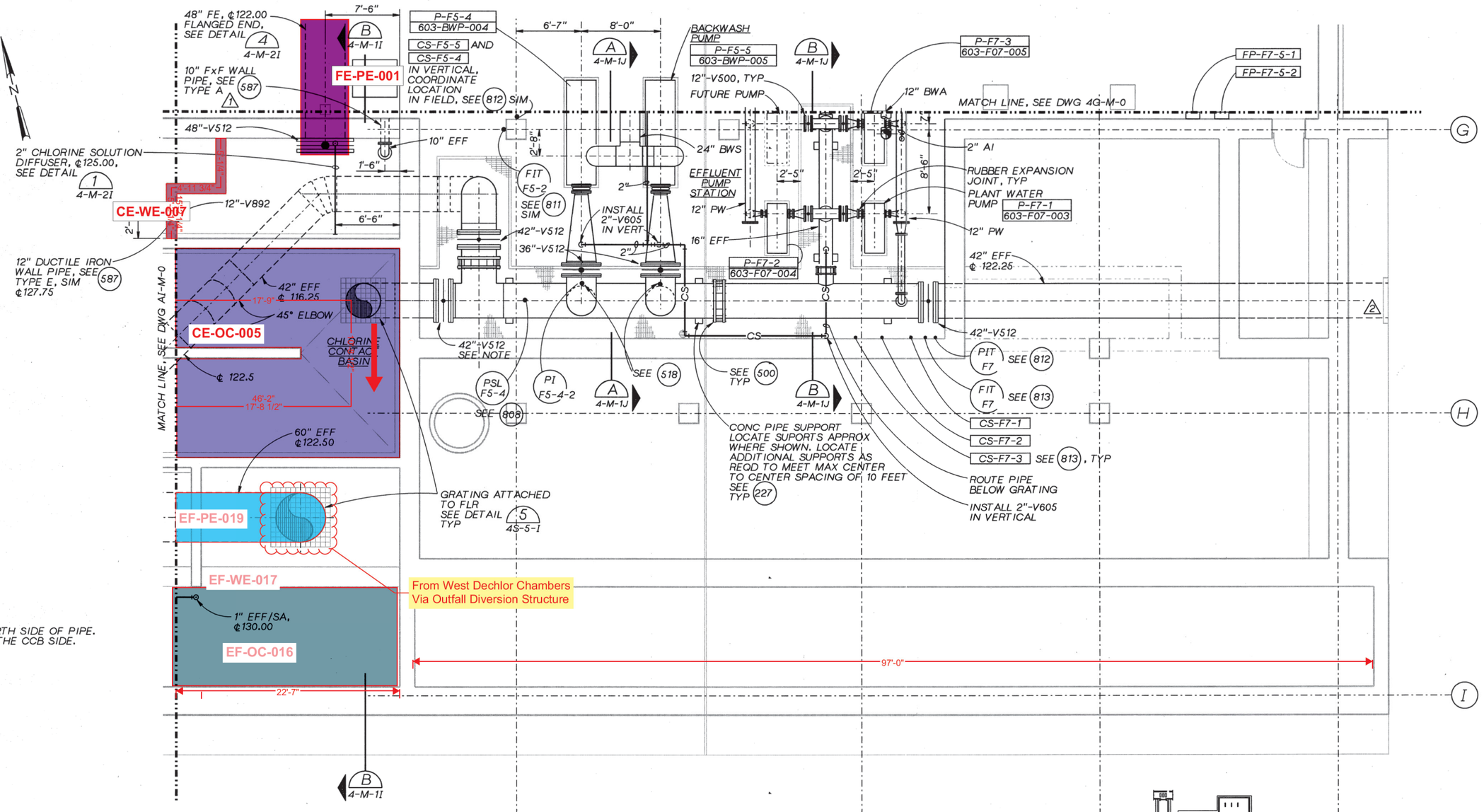

NOTE:
OPERATOR SET ON NORTH SIDE OF PIPE.
SEAT OF VALVE IS ON THE CCB SIDE.

RECORD DRAWINGS

REVISIONS DRAWN BY BAY **DATE** 7/1993

THESE RECORD DRAWINGS HAVE BEEN PREPARED, IN PART, ON THE BASIS OF INFORMATION COMPILED BY OTHERS. THEY ARE NOT INTENDED TO REPRESENT IN DETAIL THE EXACT LOCATION, TYPE OF COMPONENT NOR MANNER OF CONSTRUCTION. THE ENGINEER WILL NOT BE RESPONSIBLE FOR ANY ERRORS OR OMISSIONS WHICH HAVE BEEN INCORPORATED INTO THE RECORD DRAWINGS.

LOWER LEVEL PLAN

3/16"=1'-0"

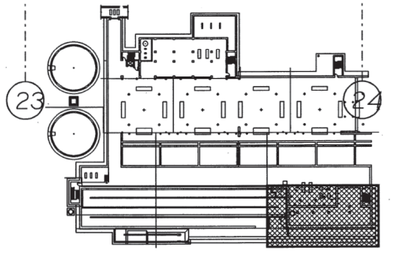

NO.	DATE	REVISION	BY	APVD
–	7/93	RECORD DRAWING	BAY	RMB
2	10/91	CL-T-148		
1	1/91	ADDENDUM NO. 4		

DSGN J HAYES/P MUELLER
DR KA ANDERSEN
CHK E SEEGMUELLLER
APVD RM BRACKEN

CH2MHILL

REUSE OF DOCUMENTS

THIS DOCUMENT, AND THE IDEAS AND DESIGNS INCORPORATED HEREIN, AS AN INSTRUMENT OF PROFESSIONAL SERVICE, IS THE PROPERTY OF CH2M HILL AND IS NOT TO BE USED, IN WHOLE OR IN PART, FOR ANY OTHER PROJECT WITHOUT THE WRITTEN AUTHORIZATION OF CH2M HILL.

©CH2M HILL

VERIFY SCALE
BAR IS ONE INCH ON ORIGINAL DRAWING.
0 1"
IF NOT ONE INCH ON THIS SHEET, ADJUST SCALES ACCORDINGLY.

ROCK CREEK
ADVANCED WASTE TREATMENT PLANT
UNIFIED SEWERAGE AGENCY
WASHINGTON COUNTY, OREGON

TERTIARY COMPLEX
MECHANICAL
LOWER LEVEL
PLAN J

SHEET	149
DWG NO.	4J-M-0
DATE	NOV 1990
PROJ NO.	PDX21262.M1

DATE: 11/01/90 VERSION NO. X
DGN NAME: I:/P21262/M1/STRUCT/RC4IS000.DGN

N

139'-5" TO ℄ UTILITY GALLERY

℄ FILTER GALLERY

D 4-S-11

MATCH LINE SEE DWG 4F-S-0

CONSTRUCTION SLAB

EXP JT SEE 210

⊗ 120

BOT OF TRENCH EL 125.7, TYP

T.O. RIM EL 126.20, TYP

6" SQ BLOCKOUT AT TRENCH

CHLORINE CONTACT BASIN

EL 126.30, TYP

FOR REBAR IN THIS AREA SEE NOTE BELOW

℄ 42" DIA PIPE SEE MECH

MATCH LINE SEE DWG 4H-S-0

SLOPE TYP

MATCH LINE SEE DWG 4J-S-0

SEE 3 4-S-51 TYP 2 PLCS

℄ 60" DIA PIPE SEE MECH

SEE 2 4-S-51

8'-10"

DECHLORINATION/ REAERATION CHANNEL

⊗ 126.25

Channel Elevation

15'-0"

18'-0" ABOVE EL 132.00

#9@6"

14'-4"

#9@6" 18'-0" BELOW EL 132.00

F 4-S-31

15'-3"

SLIDE GATE SEE MECH

6'-1 1/4"

⊗ 132.00

⊗ T.O. FTG 126.25

⊗ T.O. FTG 132.00

2'-0"

52'-2"

SEE 214 TYP THIS EXP JT

B 4-S-21

D 4-S-11

#8@6" 11'-10"

#8@6" 15'-6"

12'-0"

#10@6" ABOVE EL 132.00, STD HOOK END OF BAR AT CORNER BELOW EL 132.00

10'-9" 2'-0" 7'-0" 10'-0" 6" 1'-0" 6" 10'-0" 1'-0" 10'-0" 6" 1'-0" 6" 10'-0" 2'-0" 10'-0" 2'-10" 4'-0"

NOTE:
REBAR IN BOTTOM MAT PLACED PARALLEL AND PERPENDICULAR TO SLOPE OF EXCAVATION FOR 42" EFF PIPE.

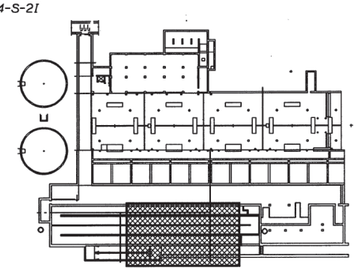

RECORD DRAWINGS

REVISIONS DRAWN BY BAY **DATE** 7/1993

THESE RECORD DRAWINGS HAVE BEEN PREPARED, IN PART, ON THE BASIS OF INFORMATION COMPILED BY OTHERS. THEY ARE NOT INTENDED TO REPRESENT IN DETAIL THE EXACT LOCATION, TYPE OF COMPONENT NOR MANNER OF CONSTRUCTION. THE ENGINEER WILL NOT BE RESPONSIBLE FOR ANY ERRORS OR OMISSIONS WHICH HAVE BEEN INCORPORATED INTO THE RECORD DRAWINGS.

FOUNDATION PLAN

3/16 " = 1'-0"

CH2M HILL

DSGN	S ALBIN, D CHILTON
DR	D SWIGART
CHK	DA HORNING
APVD	RM BRACKEN

NO.	DATE	REVISION	BY	APVD
-	7/93	RECORD DRAWING	BAY	RMB

REUSE OF DOCUMENTS

THIS DOCUMENT, AND THE IDEAS AND DESIGNS INCORPORATED HEREIN, AS AN INSTRUMENT OF PROFESSIONAL SERVICE, IS THE PROPERTY OF CH2M HILL AND IS NOT TO BE USED, IN WHOLE OR IN PART, FOR ANY OTHER PROJECT WITHOUT THE WRITTEN AUTHORIZATION OF CH2M HILL.

©CH2M HILL

VERIFY SCALE

BAR IS ONE INCH ON ORIGINAL DRAWING.

0 1"

IF NOT ONE INCH ON THIS SHEET, ADJUST SCALES ACCORDINGLY.

ROCK CREEK
ADVANCED WASTE TREATMENT PLANT

UNIFIED SEWERAGE AGENCY
WASHINGTON COUNTY, OREGON

TERTIARY COMPLEX
STRUCTURAL
FOUNDATION LEVEL
PLAN I

SHEET	70
DWG NO.	41-S-0
DATE	NOV 1990
PROJ NO.	PDX21262.M1

DATE: 10/29/90 VERSION NO. X
DGN NAME: I:/P21262/M1/MECH/RC4M01I.DGN

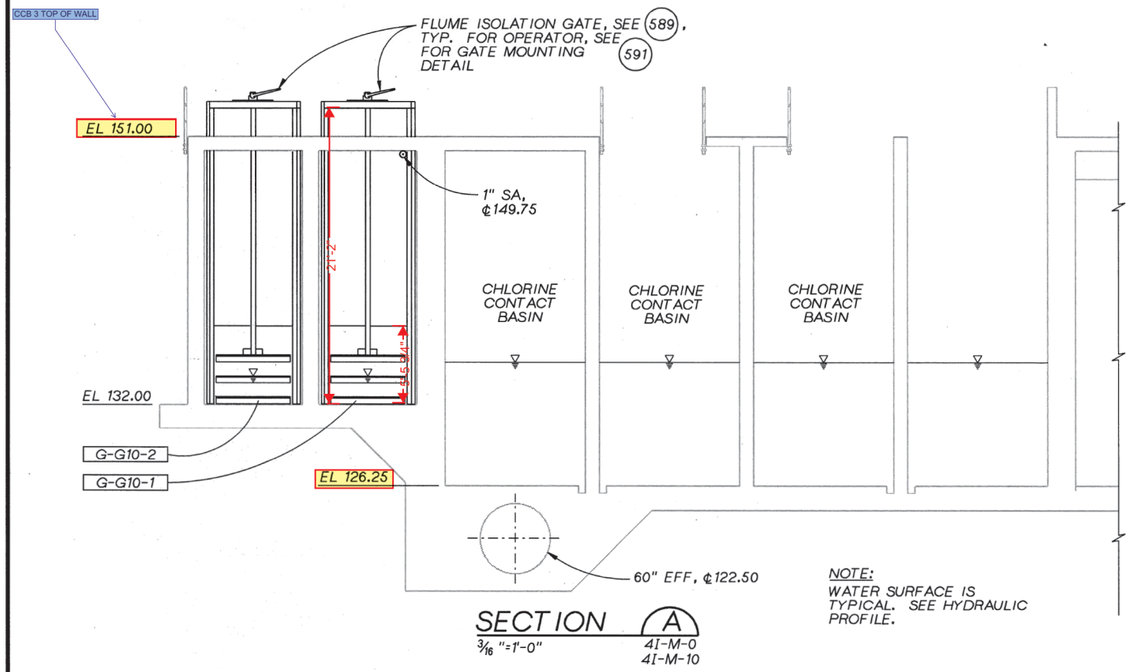

SECTION A
3/16 "=1'-0" 41-M-0 41-M-10

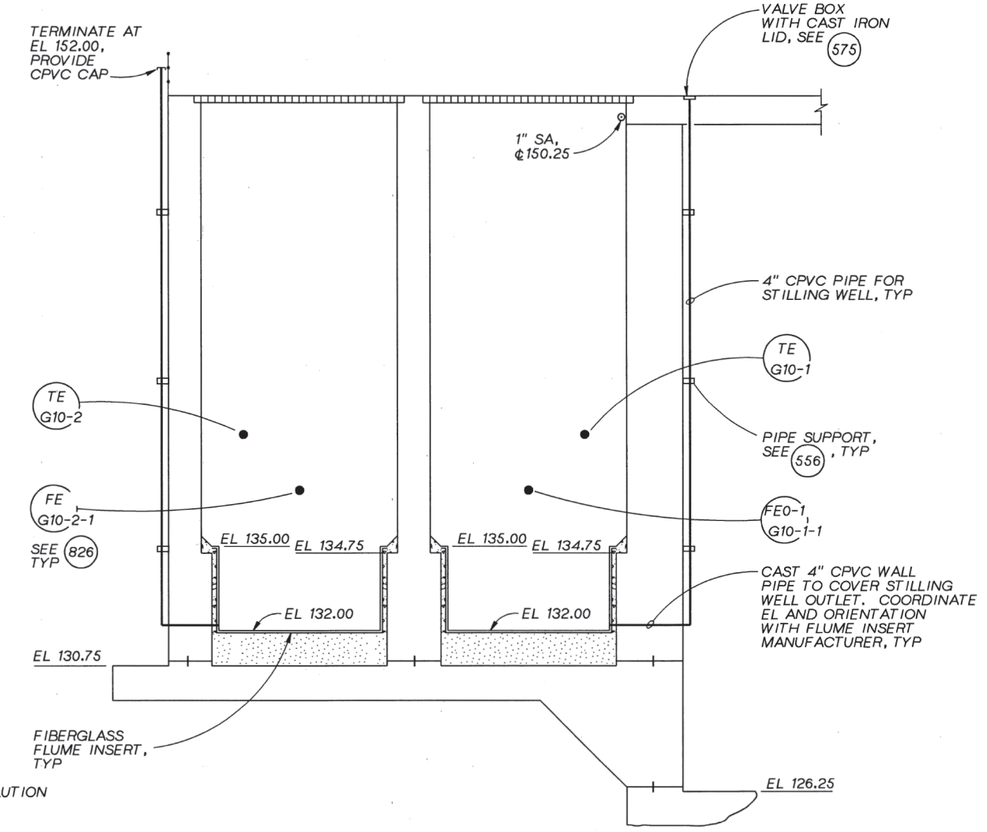

SECTION C
3/16 "=1'-0" 4H-M-0 4H-M-10

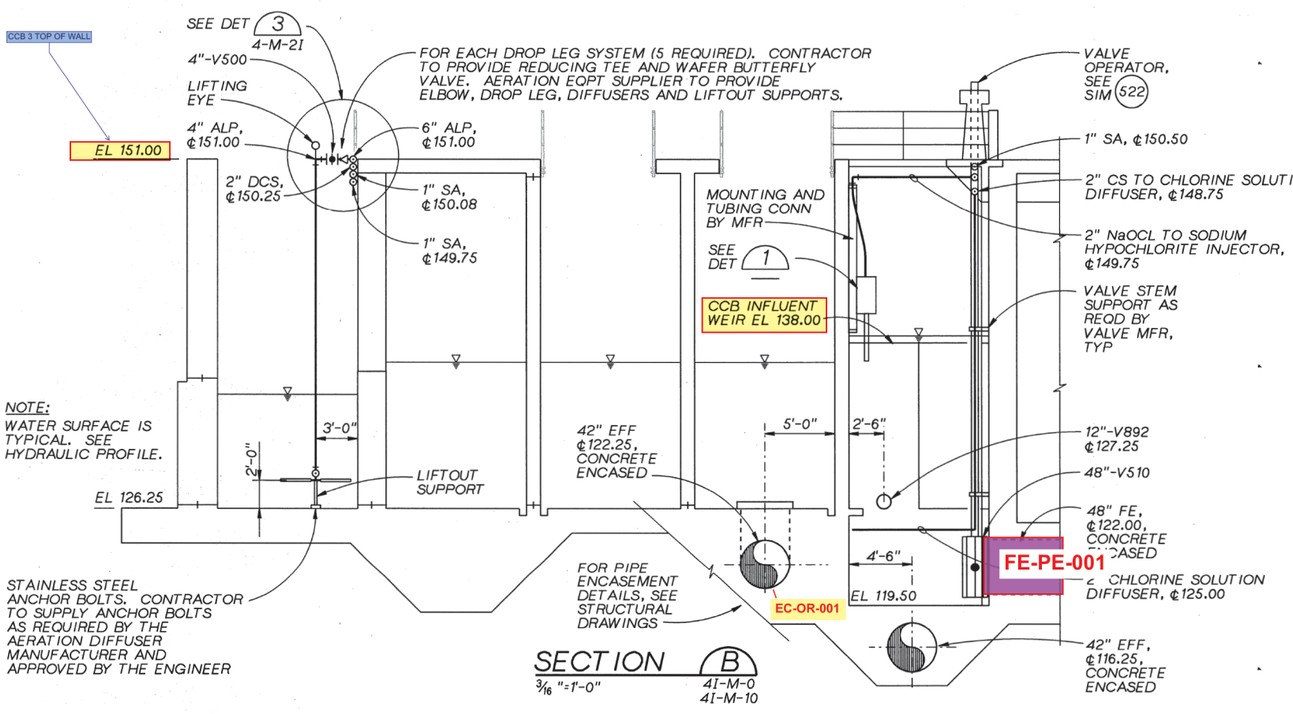

SECTION B
3/16 "=1'-0" 41-M-0 41-M-10

RECORD DRAWINGS
REVISIONS DRAWN BY BAY **DATE** 7/1993
THESE RECORD DRAWINGS HAVE BEEN PREPARED, IN PART, ON THE BASIS OF INFORMATION COMPILED BY OTHERS. THEY ARE NOT INTENDED TO REPRESENT IN DETAIL THE EXACT LOCATION, TYPE OF COMPONENT NOR MANNER OF CONSTRUCTION. THE ENGINEER WILL NOT BE RESPONSIBLE FOR ANY ERRORS OR OMISSIONS WHICH HAVE BEEN INCORPORATED INTO THE RECORD DRAWINGS.

CH2MHILL

DSGN	P MUELLER
DR	KL MCCOY
CHK	E SEEGMUELLER
APVD	RM BRACKEN

NO.	DATE	REVISION	BY	APVD
-	7/93	RECORD DRAWING	BAY	RMB

REUSE OF DOCUMENTS
THIS DOCUMENT, AND THE IDEAS AND DESIGNS INCORPORATED HEREIN, AS AN INSTRUMENT OF PROFESSIONAL SERVICE, IS THE PROPERTY OF CH2M HILL AND IS NOT TO BE USED, IN WHOLE OR IN PART, FOR ANY OTHER PROJECT WITHOUT THE WRITTEN AUTHORIZATION OF CH2M HILL.
©CH2M HILL

VERIFY SCALE
BAR IS ONE INCH ON ORIGINAL DRAWING.
0 1"
IF NOT ONE INCH ON THIS SHEET, ADJUST SCALES ACCORDINGLY.

ROCK CREEK
ADVANCED WASTE TREATMENT PLANT
UNIFIED SEWERAGE AGENCY
WASHINGTON COUNTY, OREGON

TERTIARY COMPLEX
MECHANICAL

CHLORINE CONTACT BASINS SECTIONS

SHEET	181
DWG NO.	4-M-11
DATE	NOV 1990
PROJ NO.	PDX21262.M1

PIPE SCHEDULE

SERVICE	LEGEND	SIZE (IN.) (SEE NOTE 1)	SPECIFICATION SECTION NO. (SEE NOTE 2)	MATERIAL (SEE NOTE 3)	INSTALLATION	TEST PRESS. AND TYPE (PSIG,X) (SEE NOTE 4)	MAXIMUM OPERATING PRESSURE (PSIG)	MAXIMUM OPERATING TEMP. (DEG. F)	PIPE AND ASSESSORIES COLOR (SEE NOTE 5)	REMARKS
AIR, INSTRUMENT	AI	ALL	15060-17	CU	INSIDE	200,P	140	100		
ALUM SOLUTION	AL	ALL	15060-14	PVC	ALL	150,H	100	100		
AIR LOW PRESSURE	ALP	=< 6	15060-05	STL	INSIDE	15,P	8	185		
			15060-13	SST	OUTSIDE/SUBMERGED	15,P	8			
BACKWASH AIR	BWA	=< 14	15060-05	STL	INSIDE	15,P	8	185		
		=< 12	15060-13	SST	INSIDE	15,P	8			SST BELOW ELEV 151.00
BACKWASH RETURN	BWR	> 24	15060-02	CLDI	BURIED	25,H	15	AMBIENT		CLDI ONLY ALLOWED VICINITY OF SURGE BASIN
			15060-06	WS	INSIDE/CONC ENCASED	25,H	15			CONC ENCASED AS SHOWN ON DRAWINGS, INTERIOR COATING REQUIRED
		=< 24	15060-02	CLDI	BURIED	75,H	50			
			15060-05	STL	INSIDE	75,H	50			INTERIOR COATING REQUIRED
BACKWASH SUPPLY	BWS	=< 24	15060-05	STL	INSIDE	150,H	90	AMBIENT		INTERIOR COATING REQUIRED
CHEMICAL SLUDGE	CHS	=< 6	15060-02	CLDI	ALL	30,H	20	AMBIENT		
CHLORINE SOLUTION	CS	=< 2	15060-15	CPVC	ALL	150,H	100	100		
WATER (POTABLE)	CW	=< 3	15060-17	CU	INSIDE/BURIED	150.H	90	70		INSULATE INSIDE ONLY
		> 3	15060-02	CLDI	ALL	150,H	90			
DRAIN, BUILDING	D	ALL	15060-21	CISP	ALL	10 FT. WC, H	GRAVITY	AMBIENT		
DECHLORINATING SOLUTION	DCS	2	15060-14	PVC	ALL	150,H	100	100		
PLANT EFFLUENT	EFF	> 36	15060-19	CCP	BURIED	15,H	10	AMBIENT		
			15060-02	CLDI	BURIED	15,H	10			INCLUDING BACKWASH PUMP SUCTION REDUCERS, INTERIOR COATING REQUIRED
		=> 36	15060-06	WS	INSIDE/CONC ENCASED	15,H	10			CONC ENCASE AS SHOWN ON DRAWINGS
		>10, =<24	15060-05	STL	INSIDE	15,H	10			INTERIOR COATING REQUIRED
		> 3,=< 10	15060-02	CLDI	INSIDE/BURIED	45,H	35			
		=< 1	15060-15	CPVC	ALL	45,H	35			
FILTER EFFLUENT	FE	60	15060-19	CCP	BURIED	15,H	10	AMBIENT		
			15060-02	CLDI	BURIED	15,H	10			
		> 24	15060-06	WS	CONCRETE ENCASED	25,H	15			INTERIOR COATING REQUIRED
		=< 24	15060-05	STL	INSIDE	15,H	10			INTERIOR COATING REQUIRED
FILTER OVERFLOW	FOF	=< 42	15060-06	WS	INSIDE/CONC ENCASED	20 FT. WC, H	GRAVITY	AMBIENT		INTERIOR COATING REQUIRED
HOT WATER (POTABLE)	HW	=< 2-1/2	15060-17	CU	INSIDE	150,H	90	140		
LIQUID POLYMER	LPO	ALL	15060-14	PVC	INSIDE	10,H	5	AMBIENT		
SODIUM BISULFITE	NaBS	ALL	15060-14	PVC	ALL	150,H	100	100		
SODIUM HYPOCHLORITE	NaOCl	ALL	15060-15	CPVC	ALL	150,H	100	100		
NATURAL GAS	NG	ALL	15060-05	STL	ALL	10,P	5	AMBIENT		
ROOF OVERFLOW DRAIN	OD	ALL	15060-25	CISP	ALL	10 FT WC,H	GRAVITY	AMBIENT		
POLYMER SOLUTION	PO	ALL	15060-14	PVC	INSIDE/OUTSIDE	45,H	30	AMBIENT		
WATER (NONPOTABLE PROCESS)	PW	=< 3	15060-14	PVC	BURIED	210,H	140	70		
		=< 3	15060-12	GALV	INSIDE/OUTSIDE/SUBMERGED	210,H	140			
		> 3	15060-02	CLDI	ALL	210,H	140			
REUSE	RE	24	15060-02	CLDI	BURIED	225,H	150	AMBIENT		
ROOF DRAIN	RD	ALL	15060-25	CISP	ALL	10,H	GRAVITY	AMBIENT		
SAMPLE	SA	=< 2	15060-12	GALV	ALL	(SEE NOTE 7)	(SEE NOTE 7)	(SEE NOTE 7)		
SURGE BASIN OVERFLOW	SBOF	=< 24	15060-02	CLDI	ALL	15 FT WC,H	GRAVITY	AMBIENT		
SECONDARY EFFLUENT	SE	=> 24	15060-19	CCP	BURIED	30,H	20	AMBIENT		
			15060-02	CLDI	BURIED	30,H	20			
		> 24	15060-06	WS	INSIDE	113,H	75			INTERIOR COATING REQUIRED
		=<24	15060-05	STL	INSIDE	113,H	75			INTERIOR COATING REQUIRED
STORM SEWER	SS	=< 18	15086	CP	BURIED	10 FT.W.C, H	GRAVITY	AMBIENT		
SUMP PUMP DISCHARGE	SPD	=< 3	15060-12	GALV	INSIDE	60,H	40	100		
		> 3	15060-02	CLDI	ALL	60,H	40			
TERTIARY CLARIFIER EFFLUENT	TE	=> 24	15060-06	WS	INSIDE/OUTSIDE	(SEE NOTE 8)	20	AMBIENT		INTERIOR COATING REQ'D
VENT	V	=< 4	15060-21	CISP	ALL	10 FT.W.C, H	GRAVITY	AMBIENT		

NOTES:

1. SYMBOLS- > : GREATER THAN
   =< : LESS THAN OR EQUAL TO
   => : GREATER THAN OR EQUAL TO
2. PIPE SPECIFICATIONS- SEE SECTION 15060, PLANT PIPING - GENERAL AND THE DETAIL PIPING SPECIFICATION.
3. ABBREVIATIONS-
   - CCP CONCRETE CYLINDER PIPE
   - CISP CAST IRON SOIL PIPE
   - CLDI CEMENT-LINED DUCTILE IRON PIPE
   - CP CONCRETE PIPE
   - CPVC CHLORINATED POLYVINYL CHLORIDE PIPE
   - CU COPPER
   - GALV GALVANIZED STEEL PIPE
   - PVC POLYVINYL CHLORIDE PIPE
   - SST STAINLESS STEEL PIPE
   - STL MILL STEEL PIPE
   - WS WELDED STEEL PIPE
4. TESTING TYPE- X=H: HYDROSTATIC TEST
   X=P: PNUEMATIC TEST
5. SEE SPECIFICATION PAINTING FOR PIPE COLOR AND OTHER PIPING INDENTIFICATION REQUIREMENTS. (2)
6. PROCESS VENT, OVERFLOW AND DRAIN PIPING SHALL BE THE SAME MATERIAL AS THE ASSOCIATED PROCESS PIPING. THIS PIPING IS IDENTIFIED BY A TWO SYMBOL DESIGNATION. THE FIRST SYMBOL SHALL INDICATE THE PIPING MATERIAL TO BE USED. FOR EXAMPLE, NaOCL/V INDICATES A NaOCL VENT LINE CONSTRUCTED OF CPVC MATERIAL AS INDICATED ON THE PIPE SCHEDULE FOR NaOCL.
7. OPERATING PRESSURE, TEMPERATURE AND TEST PRESSURE AND TYPE SHALL BE SAME AS THE ASSOCIATED PIPING.
8. (1) TEST 30" TE TO ELEVATION ±173.

RECORD DRAWINGS

Revisions Drawn by BAY Date JULY 1993

THESE RECORD DRAWINGS HAVE BEEN PREPARED, IN PART, ON THE BASIS OF INFORMATION COMPILED BY OTHERS. THEY ARE NOT INTENDED TO REPRESENT IN DETAIL THE EXACT LOCATION, TYPE OF COMPONENT NOR MANNER OF CONSTRUCTION. THE ENGINEER WILL NOT BE RESPONSIBLE FOR ANY ERRORS OR OMISSIONS WHICH HAVE BEEN INCORPORATED INTO THE RECORD DRAWINGS.

CH2M HILL

DSGN M. MURRAY
DR RCDM001.DWG KJ RITTER
CHK E SEEGMUELLER
APVD RM BRACKEN

NO.	DATE	REVISION	BY	APVD
(2)	7/93	RECORD DRAWING	BAY	RMB
(1)	12/91	CL-T-163		
	1/92	CL-T-174		

REUSE OF DOCUMENTS

THIS DOCUMENT, AND THE IDEAS AND DESIGNS INCORPORATED HEREIN, AS AN INSTRUMENT OF PROFESSIONAL SERVICE, IS THE PROPERTY OF CH2M HILL AND IS NOT TO BE USED, IN WHOLE OR IN PART, FOR ANY OTHER PROJECT WITHOUT THE WRITTEN AUTHORIZATION OF CH2M HILL.

©CH2M HILL

VERIFY SCALES
BAR IS ONE INCH ON ORIGINAL DRAWING
0 1"
IF NOT ONE INCH ON THIS SHEET, ADJUST SCALES ACCORDINGLY.

ROCK CREEK
ADVANCED WASTE TREATMENT PLANT

UNIFIED SEWERAGE AGENCY
WASHINGTON COUNTY, OREGON

TERTIARY COMPLEX
STANDARD DETAILS
MECHANICAL PIPE SCHEDULE

SHEET 251
DWG NO. 1-D-M1
DATE NOV 1990
PROJ NO. PDX21262.M1

CW WEST CHLORINE
CONTACT BASIN

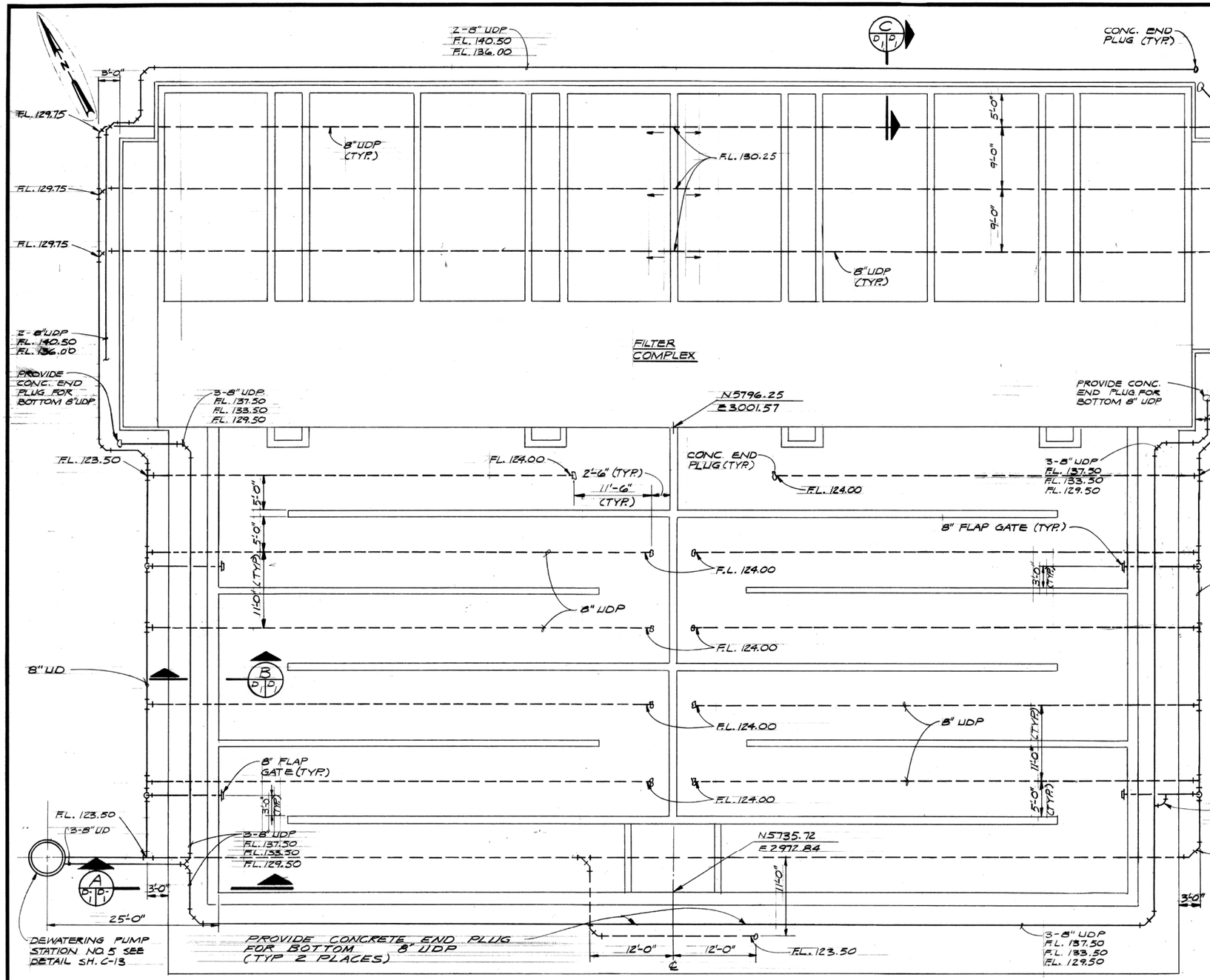

FILTER COMPLEX UNDERDRAIN PLAN

1/8" = 1'-0"

NOTE:
ALL FILTER COMPLEX EXTERIOR WALLS SHALL BE BACKFILLED IN ACCORDANCE WITH SECTION B D 1 D 1 AND SECTION C D 1 D 1

REGISTERED PROFESSIONAL ENGINEER 7148 OREGON JULY 13, 1976 JOHN RAMAGE

CH2M HILL

DES. RAS/DCC	DR. KPW	CHK. JR	APPD. DAS

NO.	DATE	REVISION	BY	APPD.
1	JUNE 78	RECORD DRAWING	RFG	LJB

UNIFIED SEWERAGE AGENCY
WASHINGTON COUNTY, OREGON
ROCK CREEK
ADVANCED WASTEWATER TREATMENT PLANT

CONTRACT NO. 38 SCHEDULE C
FILTER COMPLEX
UNDERDRAIN - PLAN AND SECTION

SHEET D-1
OF 35
DATE JAN. 1978
DWG. NO. C8892-20

MATCH LINE SEE SH. D-8

EXPANSION JOINT

CW-WE-007

CW-OC-006

CW-OC-005

CW-OC-004

CW-OC-003

CW-OC-002

CW-WE-001

EF-PE-020

NOTE:
SEE STD. STRUC. DETAIL (30) FOR ARCH. WALL TREATMENT. CONT. AROUND OUTSIDE WALLS.

HANDRAIL (TYP) **42

MATCH LINE SEE SH. 9

SLOPE

SLOPE

C.J. WITHOUT WATERSTOP (TYP)

EXPANSION JOINT

SLUICE GATE HOIST (TYP) *31

CHLORINE CONTACT CHAMBER NO. 2

CHLORINE CONTACT CHAMBER EFFLUENT WEIR

TOP OF WALL 149.00

WEIR CREST 147.80

℄ PLANT EFFLUENT LINE

℄ FILTER & CHLORINE CONTACT CHAMBER

10'-0" (TYP.)

PLAN
1/4" = 1'-0"

KEY PLAN

REGISTERED PROFESSIONAL ENGINEER 2084 OREGON JULY 16, 1971 RICHARD A. HORNING
Richard A. Horning

CH2M HILL

DES.	CAG
DR.	JBW
CHK.	RAH
APPD.	DAS

NO.	DATE	REVISION	BY	APPD.
1	JUNE 78	RECORD DRAWING	RFG	LNB

UNIFIED SEWERAGE AGENCY
WASHINGTON COUNTY, OREGON
ROCK CREEK
ADVANCED WASTEWATER TREATMENT PLANT

CONTRACT NO. 38 SCHEDULE C
FILTER COMPLEX
STRUCTURAL PLAN

SHEET D-10
OF 35
DATE JAN. 1978
DWG. NO. C6892-20

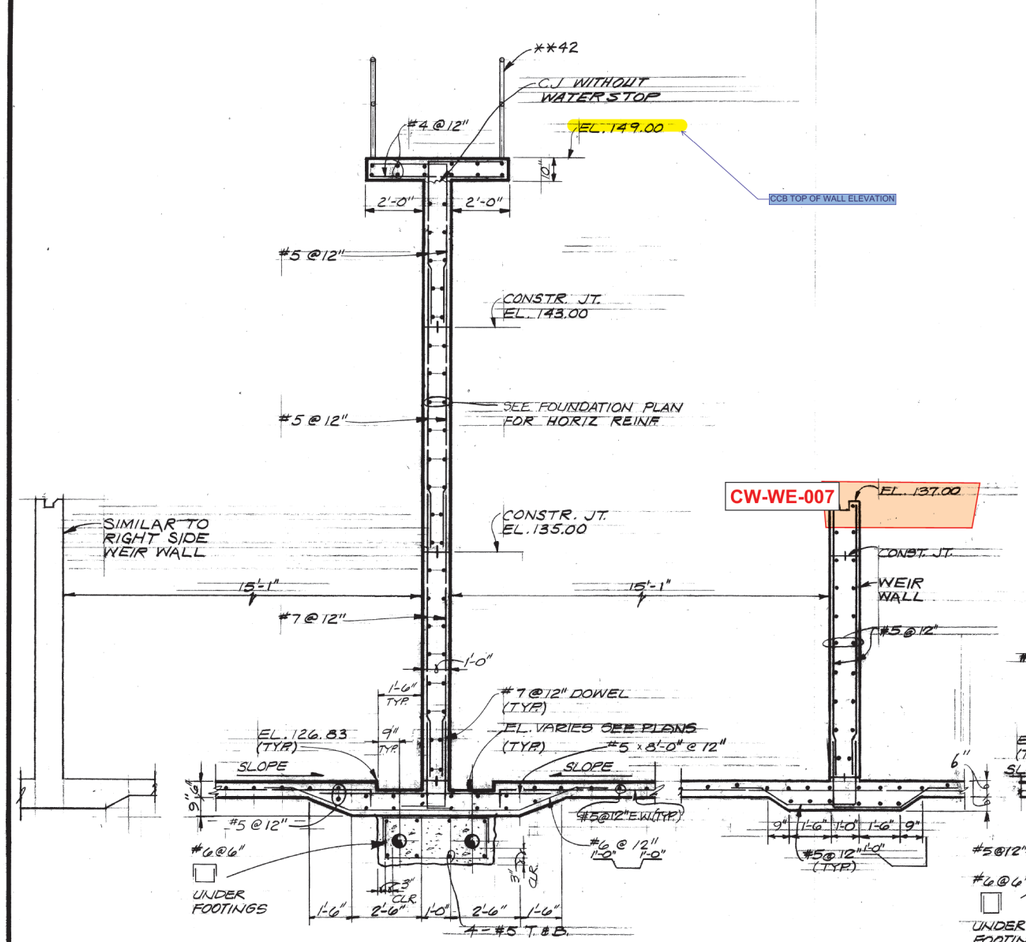

SECTION M

3/8" = 1'-0"

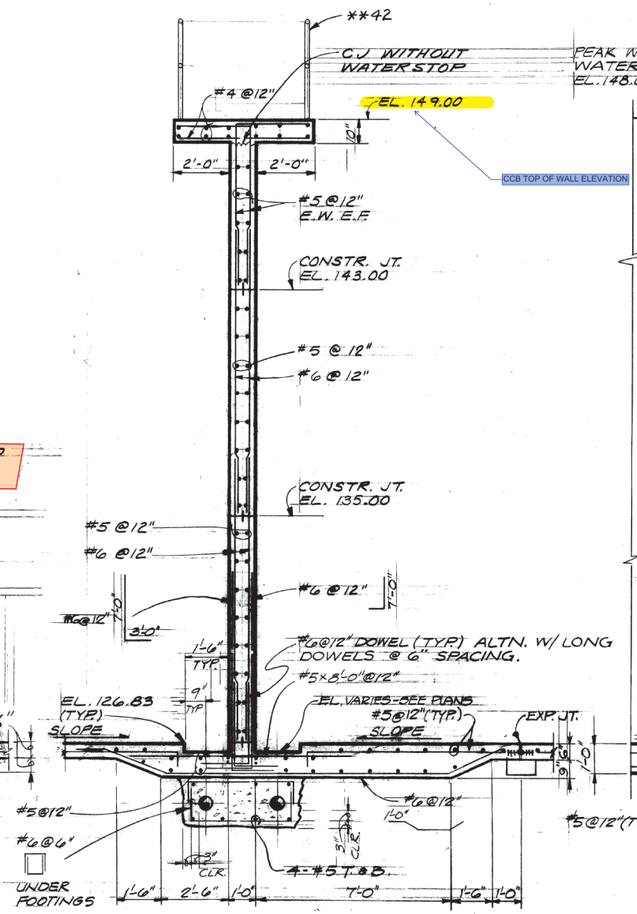

SECTION N

3/8" = 1'-0"

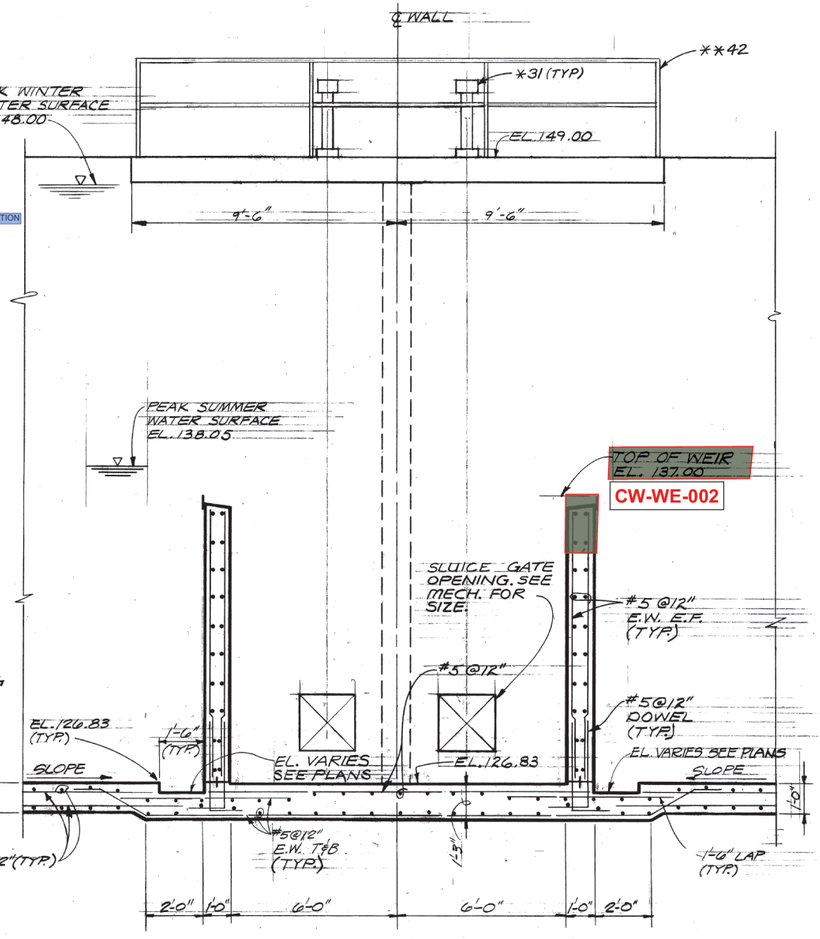

SECTION O

3/8" = 1'-0"

REGISTERED PROFESSIONAL ENGINEER 7084 OREGON JULY 16, 1971 Richard A. Horning RICHARD A. HORNING

CH2M HILL

DES.	CAG
DR.	GAM
CHK.	RAH
APPD.	DAS

NO.	DATE	REVISION	BY	APPD.
1	JUNE 78	RECORD DRAWING	RAG	LJB

UNIFIED SEWERAGE AGENCY
WASHINGTON COUNTY, OREGON

ROCK CREEK
ADVANCED WASTEWATER TREATMENT PLANT

CONTRACT NO. 38 SCHEDULE C
FILTER COMPLEX

STRUCTURAL SECTIONS

SHEET D-17
OF 35
DATE JAN. 1978
DWG. NO. C8892-20

WS-PE-001

CW-PE-010

CW-GA-009

CW-DU-008

FOUNDATION PLAN @ EL. 128.00

1/4" = 1'-0"

FOUNDATION PLAN @ EL. 124.00

1/4" = 1'-0"

KEY PLAN

KEY PLAN

CH2M HILL	DES. CAG						
	DR. JBW						
	CHK. RAH						
	APPD. DAS	1	JUNE 78	RECORD DRAWING	RFG	LJB	
		NO.	DATE	REVISION	BY	APPD.	

REGISTERED PROFESSIONAL ENGINEER 7084 OREGON JULY 10, 1971 RICHARD A. HORNING

UNIFIED SEWERAGE AGENCY
WASHINGTON COUNTY, OREGON

ROCK CREEK
ADVANCED WASTEWATER TREATMENT PLANT

CONTRACT NO. 38 SCHEDULE C
FILTER COMPLEX

FOUNDATION PLANS

SHEET D-2
OF 35
DATE JAN. 1978
DWG. NO. C8892-20

NOTE!
SLUICE GATES & SLUICE GATE HOISTS & STEMS NOT SHOWN. SEE MECH.

**42 JIB CRANE

CTR. LINE EL. 151.08

EL. 149.00

3 RISERS @ 8" = 2'-0"
2 TREADS @ 10" = 1'-8"

2'-0" 2'-0"

#5@12"

CONSTR. JT. EL. 144.50

EXP. JT. SIM. TO STD. STRUCT. DETAIL. OMIT DOWEL BARS IN WALL AND PROVIDE CORK JT. FILLER

#5@12"

SEE FOUNDATION PLAN FOR HORIZ. REINF.

PEAK SUMMER WATER SURFACE EL. 138.05 (TYP. BOTH SIDES)

EL. 137.00 (TYP.)

CONSTR. JT. EL. 136.12

#6@12"

#5@12" E.F. (TYP.)

SEE DETAIL 6/6/21

5'-0" 2'-8" 5'-0" 1'-5" 1'-5" 5'-0" 2'-8" 5'-0"

CONSTR. JT. EL. 130.83

1'-2" 1'-2"

#6@6"

CW-GA-009

EL. 127.00

2'-5 1/2"

#7@12" (TYP.)

#9@12" (TYP.)

2'-0"

2'-6" 2'-6"

EL. 123.50

#6@6" DOWELS

#7@12" (TYP.)

EL. 121.00

7'-7" 1'-0" 7'-7"

1'-0" 15'-1" 15'-1" 1'-0"

Filter Bypass Gate

Filter Effluent Gate
Filters Decommissioned

SECTION J
3/8"=1'-0"
D/2 D/3 D/4 D/7 D/8 D/6

SEE STD. STRUCTURAL DETAILS (16), (17) & (19)

FOR ROOF REINF. SEE SEC. C/3 1/2

PEAK WINTER WATER SURFACE EL. 148.00 (TYP. BOTH SIDES)

** 48 SEE STD. STRUC. DETAIL 30 FOR ARCH. WALL TREATMENT (TYP.)

1'-2"

#5@12" (TYP. 4 PLACES)

#5@12"

CONSTR. JT. EL. 144.50

#5@12"

SEE FOUNDATION PLAN FOR HORIZ. REINF.

1'-2"

CONSTR. JT. EL. 136.12

#5@6"

48" DIA. PIPE

1'-0" 4'-0"

#5@12"

#5@12" DWL'S (TYP.)

WS-PE-001

5'-0"

6"

#6@12"

#5@12"

4'-0"

CW-PE-010

#5@12" E.W.

#5@12" 1'-0" 4'-0"

#9@12"

#5@12"

FILTER INFLUENT CONDUIT

SECTION K
3/8"=1'-0"
D/3 D/7 D/6

4'-6" (TYP.)

GATE (TYP.) **42

**42

FOR ROOF REINF. SEE SECTION G/4 1/2

THIS CONTRACT

4-#6 EACH SIDE (TYP. 8 PLACES)

#5@12" (TYP. 4 PLACES)

CENTER LINE EL. 151.08

1'-0"

#5@12" (TYP. 4 PLACES)

#5@12" (TYP. 4 PLACES)

EL. 147.00

10" 3'-0"

1'-0" 4'-0" 1'-0"

4-#5 EACH SIDE (TYP. 4 PLACES)

CONSTR. JT. EL. 144.50

#4@12" (TYP. 4 PLACES) FOR REINF. @ INTERSECTIONS OF HORIZ. & VERT. CONDUITS SEE DETAIL 7/6/21

#5@12"

SEE FOUNDATION PLAN FOR HORIZ. REINF.

FILTER GALLERY

1'-2"

CONSTR. JT. EL. 136.12

#5@6"

#5@6" DOWELS (TYP.)

#6@6"

#9@12"

#5@12"

EL. 130.83 @ ℄

#5@12"

2'-0"

#5@12"

STD. LAP SPLICE FOR TOP BARS

CW WITH WATERSTOP

#9@12"

#9@12"

EL. 125.92

1'-2" 6"

12'-6"

4'-6"

1'-0" 5'-0"

SECTION L
3/8"=1'-0"
D/4 D/8 D/6

REGISTERED PROFESSIONAL ENGINEER 7084 OREGON JULY 16, 1971 RICHARD A. HORNING
Richard A. Horning

CH2M HILL

DES.	CAG
DR.	DSP
CHK.	RAH
APPD.	DAS

NO.	DATE	REVISION	BY	APPD.
1	JUNE 78	RECORD DRAWING	RFG	LJB

UNIFIED SEWERAGE AGENCY
WASHINGTON COUNTY, OREGON
ROCK CREEK
ADVANCED WASTEWATER TREATMENT PLANT

CONTRACT NO. 38 SCHEDULE C
FILTER COMPLEX

STRUCTURAL SECTIONS

SHEET D-16
OF 35
DATE JAN., 1978
DWG. NO. C8892-20

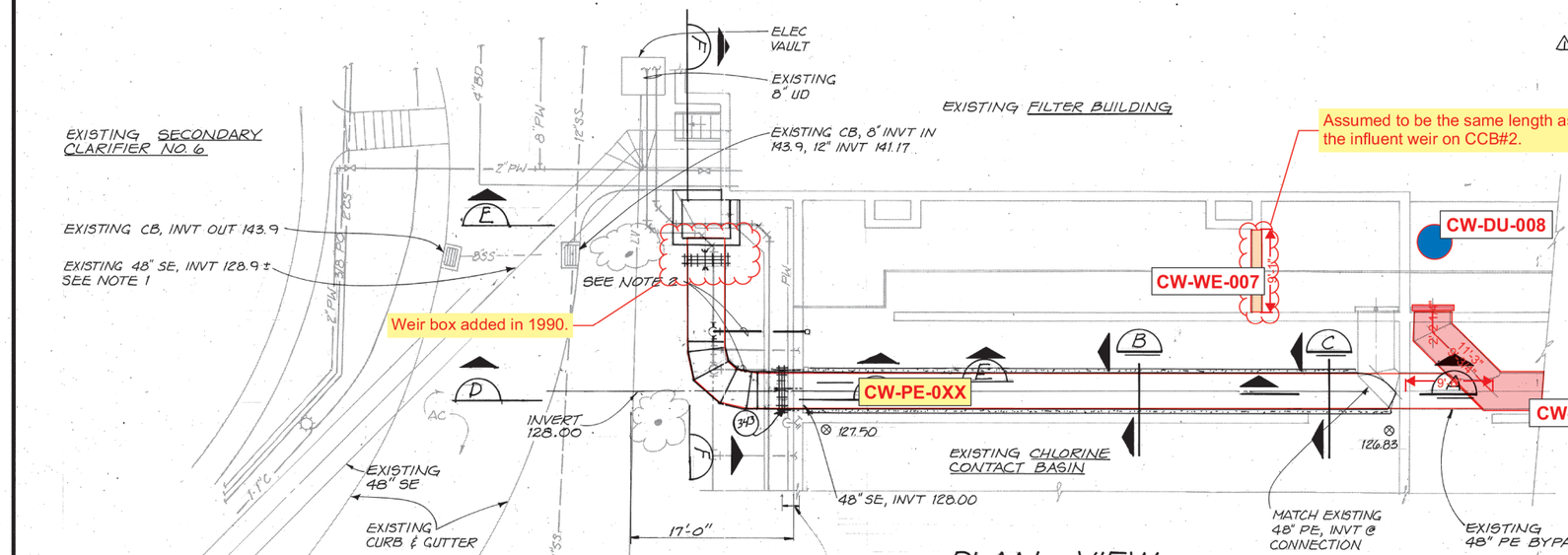

PLAN VIEW
1/8" = 1'-0"

NOTES:

1. ~~FIELD VERIFY LOCATION, INVERT ELEVATION AND TYPE OF PIPE MATERIAL OF THE EXISTING 48" SE AT THE CONNECTION WITH THE NEW 48" SE.~~
2. REMOVE EXISTING FLAP VALVE AND 8" UD AND CAP EXISTING TEE OUTLET AS SHOWN ON THE DRAWINGS. FIELD VERIFY LOCATION, INVERT ELEVATION AND TYPE OF PIPE MATERIAL OF THE EXISTING 8" UD. RELOCATE EXISTING FLAP VALVE AND 8" UD 4' FROM EXISTING LOCATION AS SHOWN ON THE DRAWINGS. RECONNECT TO 8" UD. SEE DETAIL (6) 4-M-4 SIM.
3. *FIELD VERIFY EXISTING ELEVATIONS.
4. EXISTING UTILITIES SHOWN DO NOT NECESSARILY DEPICT ALL BURIED UTILITIES PRESENT. FIELD VERIFY ALL EXISTING BURIED UTILITIES FOR SIZE AND LOCATION PRIOR TO CONSTRUCTION.
5. REPLACE ASPHALT SURFACING, CONCRETE CURBS AND GUTTERS, SIDEWALKS, AND OTHER APPURTENANCES DAMAGED DURING CONSTRUCTION, TO ORIGINAL GRADE AND LOCATION.
6. REMOVE AND REPLACE EXISTING IRRIGATION PIPING, VALVES, AND SPRINKLER HEADS AS REQUIRED FOR CONSTRUCTION.
7. AFTER FILTER SHUT-DOWN, BREAK OUT REMAINING CONCRETE AND CUT REBAR FLUSH WITH OPENING. REMOVE ALL CONCRETE DEBRIS FROM AREA COAT OPENING CONCRETE & REBAR WITH KOPPERS A-788 SPLASH ZONE COMPOUND.

RECORD DRAWINGS
Revisions Drawn by KJ RITTER Date JAN '92

THESE RECORD DRAWINGS HAVE BEEN PREPARED, IN PART, ON THE BASIS OF INFORMATION COMPILED BY OTHERS. THEY ARE NOT INTENDED TO REPRESENT IN DETAIL THE EXACT LOCATION, TYPE OF COMPONENT NOR MANNER OF CONSTRUCTION. THE ENGINEER WILL NOT BE RESPONSIBLE FOR ANY ERRORS OR OMISSIONS WHICH HAVE BEEN INCORPORATED INTO THE RECORD DRAWINGS.

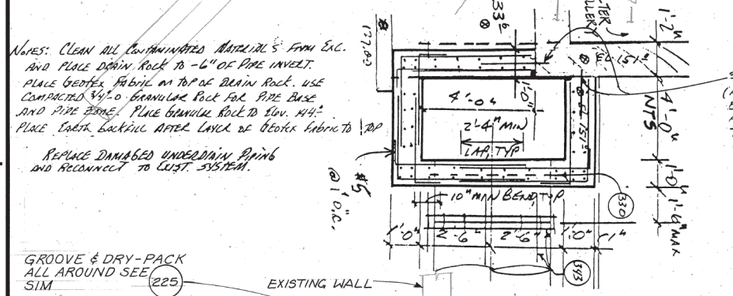

DETAIL (1)

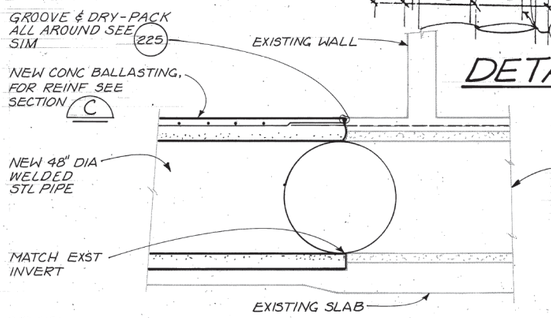

NOTES:
1. REMOVE EXST CONC PIPE BALLASTING & 48" DIA CONC CYLINDER PIPE WALL AS REQD TO MAKE NEW CONNECTION
2. WELD NEW STL PIPE TO EXST STL CYL, TO MAKE WATER TIGHT CONN
3. REPAIR INTERIOR COATINGS
4. PLACE NEW CONC PIPE BALLASTING. TIE NEW BALLAST TO EXPOSED REINF OF EXISTING BALLASTING

CONNECTION TO EXISTING 48" DIA PIPE SECTION (A)
3/8" = 1'-0"

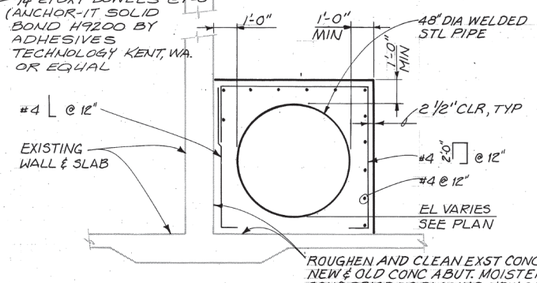

BALLASTING FOR 48" DIA PIPE SECTION (B)
3/8" = 1'-0"

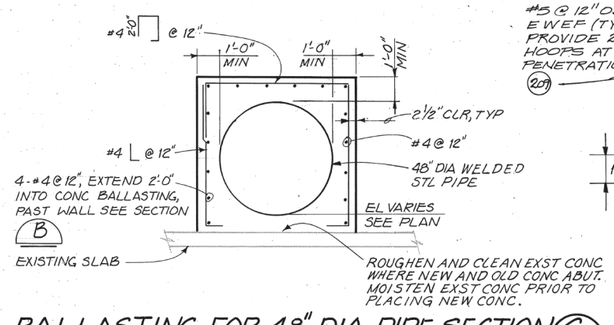

BALLASTING FOR 48" DIA PIPE SECTION (C)
3/8" = 1'-0"

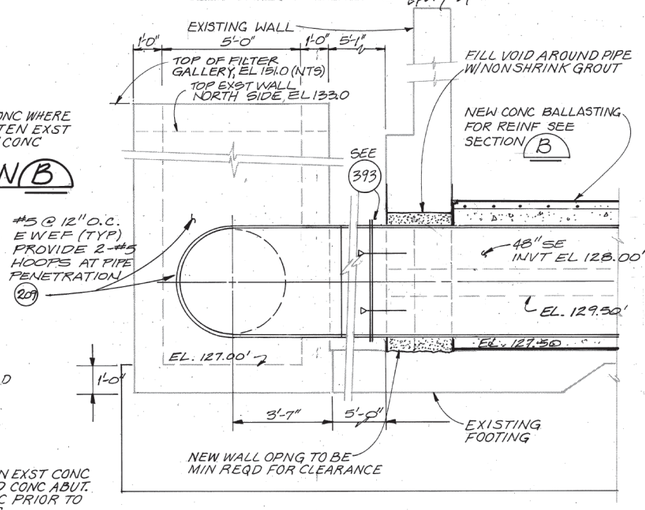

WALL PENETRATION (D)
3/8" = 1'-0"

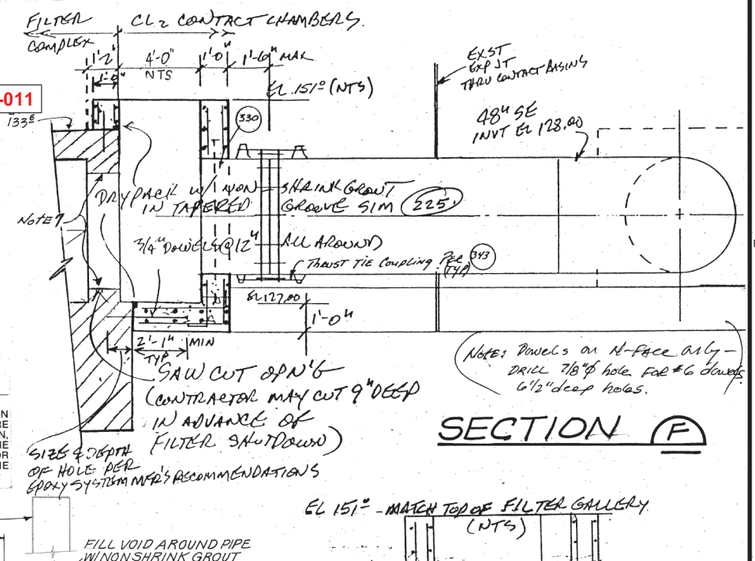

SECTION (F)

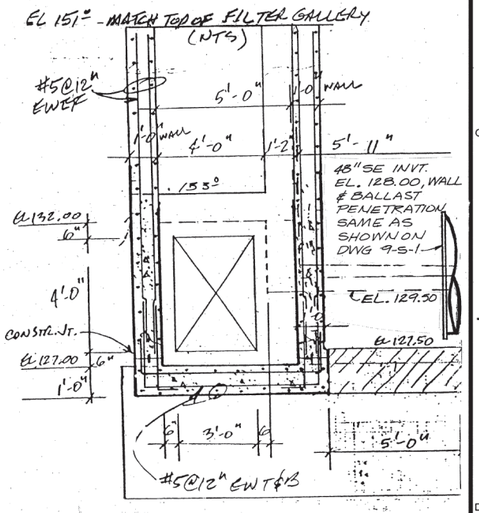

SECTION (E)
NTS

REGISTERED PROFESSIONAL ENGINEER 4713 OREGON JULY 14, 1961 STEVE S. C. LEE

CH2MHILL

DSGN	D. TANIGUCHI
DR	D. VASCHE
CHK	S. FREY, S. GIBBS
APVD	M. BRACKEN

NO.	DATE	REVISION	BY	APVD
1	5/91, 9/27/89	RECORD DRAWINGS, CL-125A REVISED 48" SE PIPING	JBL, JBL	RMB, RMB

REUSE OF DOCUMENTS
THIS DOCUMENT, AND THE IDEAS AND DESIGNS INCORPORATED HEREIN, AS AN INSTRUMENT OF PROFESSIONAL SERVICE, IS THE PROPERTY OF CH2M HILL AND IS NOT TO BE USED, IN WHOLE OR IN PART, FOR ANY OTHER PROJECT WITHOUT THE WRITTEN AUTHORIZATION OF CH2M HILL.
©CH2M HILL

VERIFY SCALES
BAR IS ONE INCH ON ORIGINAL DRAWING. 0 ——— 1"
IF NOT ONE INCH ON THIS SHEET, ADJUST SCALES ACCORDINGLY.

ROCK CREEK
ADVANCED WASTEWATER TREATMENT PLANT
UNIFIED SEWERAGE AGENCY
WASHINGTON COUNTY, OREGON

PHASE 1 EXPANSION
CHLORINE CONTACT BASIN MODIFICATION
STRUCTURAL/MECHANICAL — PLAN, SECTIONS AND DETAIL

SHEET	217
DWG NO.	9-S-1
DATE	APRIL, 1987
PROJ NO.	P21262.B1

OVERLAY IDENTIFICATION | COMPOSITE | OVERLAY | SCREEN
PROJ NO. | CONTRACT
FORMAT 234MC 9-7 | 9-S-1 | 9-11 | 9-S-1 | 9-11
DESIGNED BY | DRAWN BY | CHECKED BY
PRINTED 9-7 | 9-S-1 | 9-11 | S
FILM KE

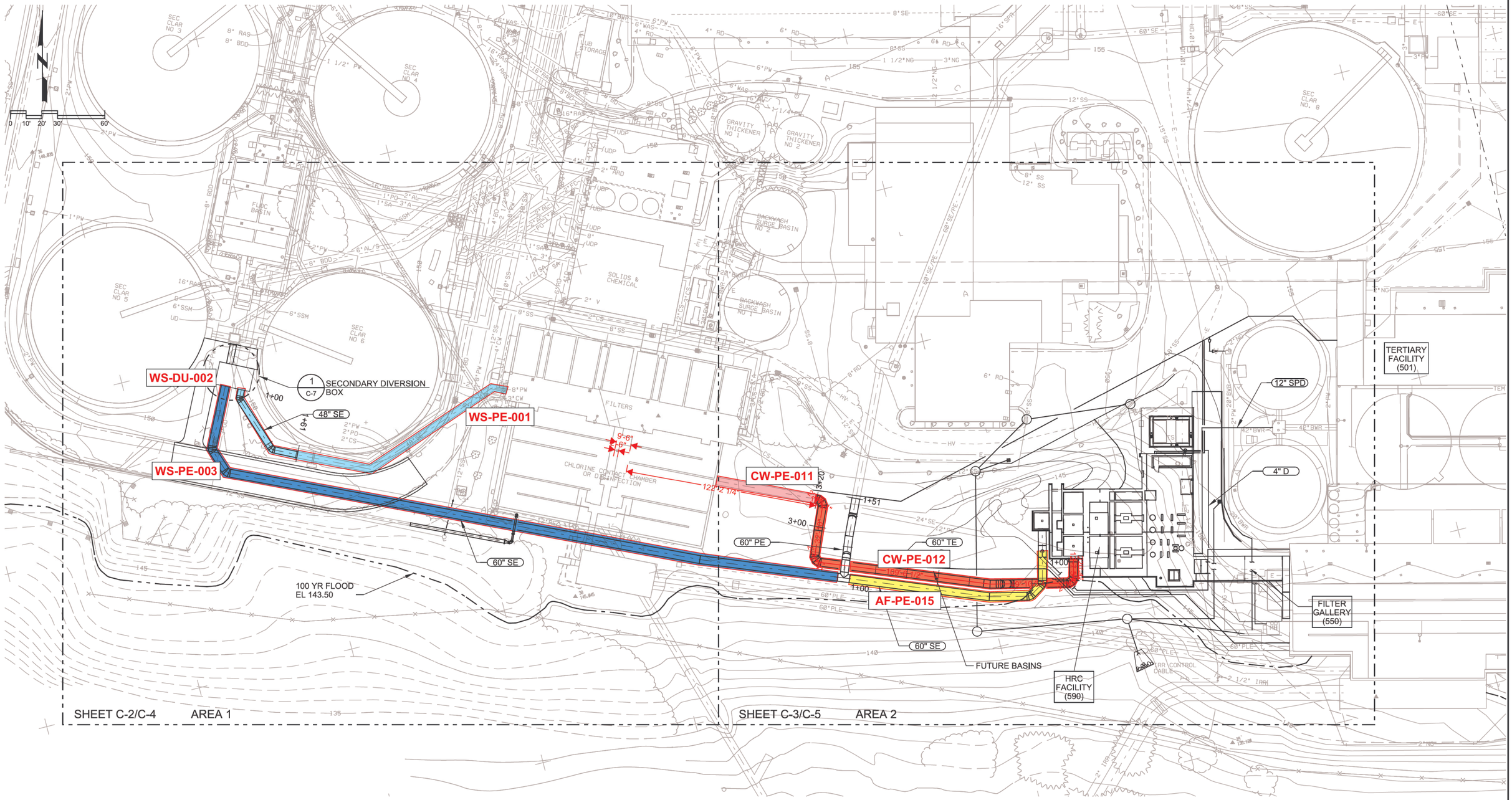

OVERALL SITE PLAN

SCALE: 1" = 30'
FILE: 7182E10-010-101

REV	DATE	BY	DESCRIPTION
			RECORD DRAWING

DESIGNED RJN
DRAWN MJG
CHECKED DB
DATE FEB 2014

** ORIGINAL STAMPED BY JEFFREY F. McCORMICK FEB 2012 19616PE **

PROJECT ENGINEER

carollo

Clean Water Services
Our commitment is clear.

CLEAN WATER SERVICES
TERTIARY TREATMENT PROJECT
CIVIL
OVERALL SITE PLAN

VERIFY SCALES
BAR IS ONE INCH ON ORIGINAL DRAWING
0 1"
IF NOT ONE INCH ON THIS SHEET, ADJUST SCALES ACCORDINGLY

JOB NO. 7182E.12
DRAWING NO. C-1
SHEET NO. 22 OF 144

PROJECT NO. 7182E12 FILE NAME: 7182E12-226-C-001.dgn

Plot Date: 12-MAR-2014 2:25:58 PM
User: MGabel
Model: Layout1 ColorTable: gshade.ctb DesignScript: Carollo_Std_Pen_v0905.pen PlotScale: 2:1
LAST SAVED BY: mgabel

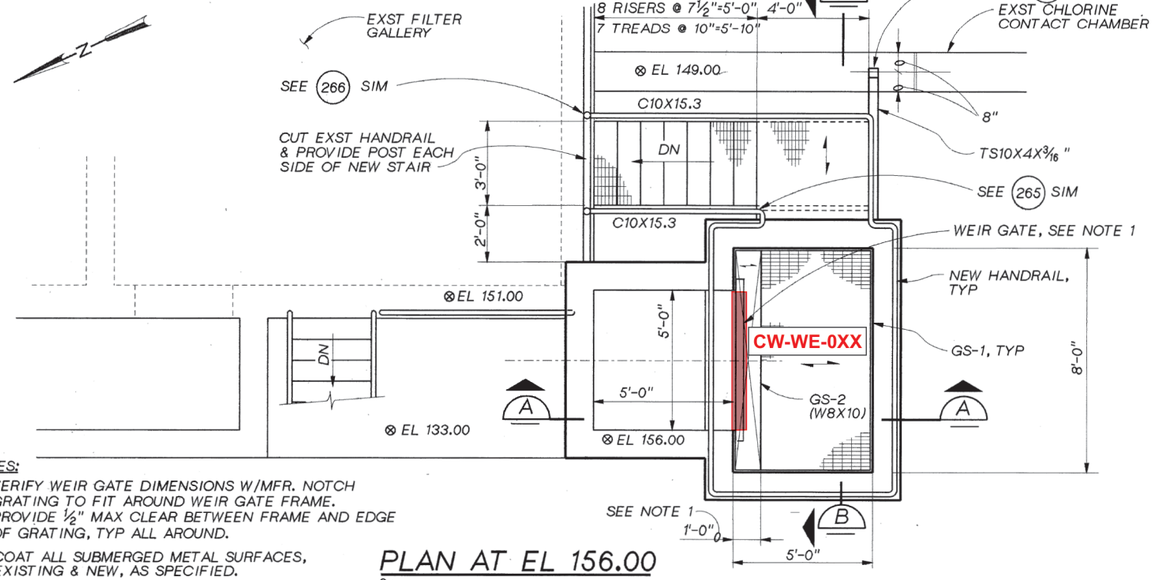

PLAN AT EL 156.00

3/8"=1'-0"

NOTES:

1. VERIFY WEIR GATE DIMENSIONS W/MFR. NOTCH GRATING TO FIT AROUND WEIR GATE FRAME. PROVIDE ½" MAX CLEAR BETWEEN FRAME AND EDGE OF GRATING, TYP ALL AROUND.
2. COAT ALL SUBMERGED METAL SURFACES, EXISTING & NEW, AS SPECIFIED.
3. CUT AND REMOVE EXST 48"SE SPOOL PIECE & DRESSER CPLG FOLLOWING COMPLETION OF INTERTIE PIPING & DIVERSION STRUCTURE AND GRIND PIPE END SMOOTH & FLUSH W/WALL. SEAL DIVIDER WALL SPOOL WATERTIGHT WITH STEEL PLATE WELDED AS SHOWN. SEE SPECIFICATIONS FOR RESTRICTIONS THAT APPLY TO TEMPORARY PLANT SHUTDOWN.
4. FOR PLAN VIEW BELOW EL 151.00, SEE DWG S-2.

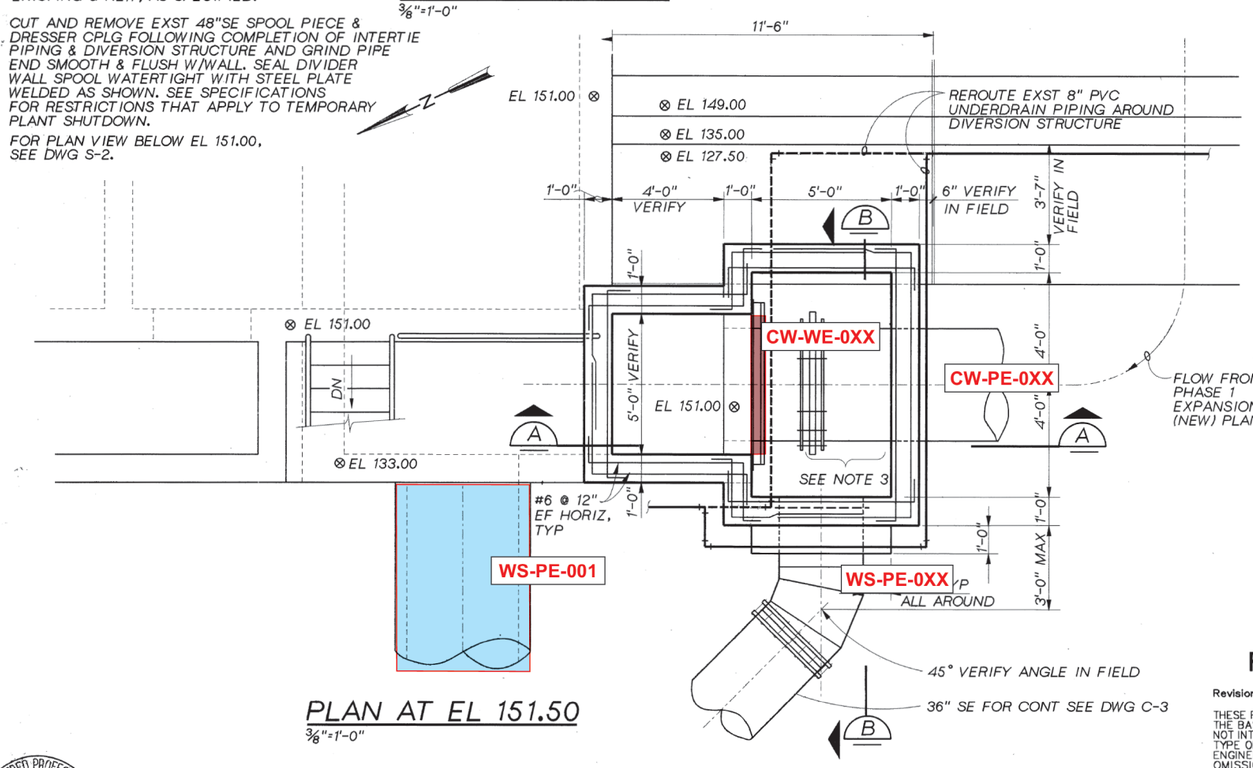

PLAN AT EL 151.50

3/8"=1'-0"

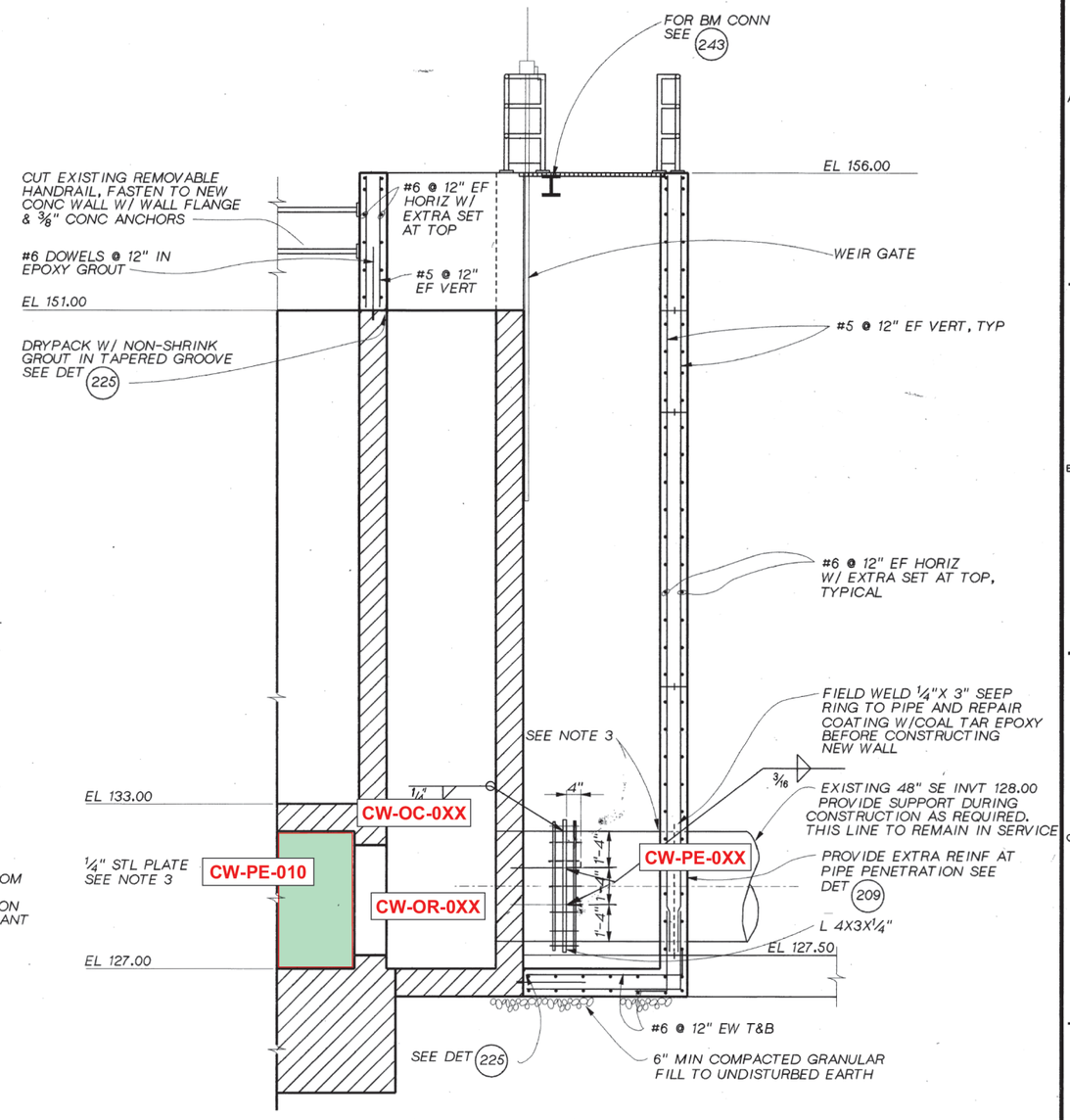

SECTION A

3/8"=1'-0"

RECORD DRAWINGS

Revisions Drawn By A. OLSON Date 2-12-92

THESE RECORD DRAWINGS HAVE BEEN PREPARED, IN PART, ON THE BASIS OF INFORMATION COMPILED BY OTHERS. THEY ARE NOT INTENDED TO REPRESENT IN DETAIL THE EXACT LOCATION, TYPE OF COMPONENT NOR MANNER OF CONSTRUCTION. THE ENGINEER WILL NOT BE RESPONSIBLE FOR ANY ERRORS OR OMISSIONS WHICH HAVE BEEN INCORPORATED INTO THE RECORD DRAWINGS.

REGISTERED PROFESSIONAL ENGINEER OREGON 7084 JULY 15, 1977 RICHARD A. HORNING

CH2M HILL

DSGN	RA HORNING
DR	D SWIGART
CHK	HH MEJDELL
APVD	J GRIFFITHS

NO.	DATE	REVISION	BY	APVD
2	2-92	RECORD DRAWING	AGO	RMB

REUSE OF DOCUMENTS
THIS DOCUMENT, AND THE IDEAS AND DESIGNS INCORPORATED HEREIN, AS AN INSTRUMENT OF PROFESSIONAL SERVICE, IS THE PROPERTY OF CH2M HILL AND IS NOT TO BE USED, IN WHOLE OR IN PART, FOR ANY OTHER PROJECT WITHOUT THE WRITTEN AUTHORIZATION OF CH2M HILL.
©CH2M HILL

VERIFY SCALE
BAR IS ONE INCH ON ORIGINAL DRAWING.
0 1"
IF NOT ONE INCH ON THIS SHEET, ADJUST SCALES ACCORDINGLY.

ROCK CREEK
ADVANCED WASTEWATER TREATMENT PLANT
UNIFIED SEWERAGE AGENCY
WASHINGTON COUNTY, OREGON

ROCK CREEK PHASE 2 FACILITIES
STRUCTURAL
EFFLUENT INTERTIE

SHEET	14
DWG NO.	S-1
DATE	FEB 1990
PROJ NO.	PDX21262.K1

1=32

CHECKED BY
DRAWN BY
DESIGNED BY
OVERLAY IDENTIFICATION
COMPOSITE
OVERLAY SCREEN
PROJID
FILE

FE EAST TERTIARY FILTERS

DATE: 6/28/93 VERSION NO.12
DGN NAME: /M2/MECH/RC4JM000.DGN

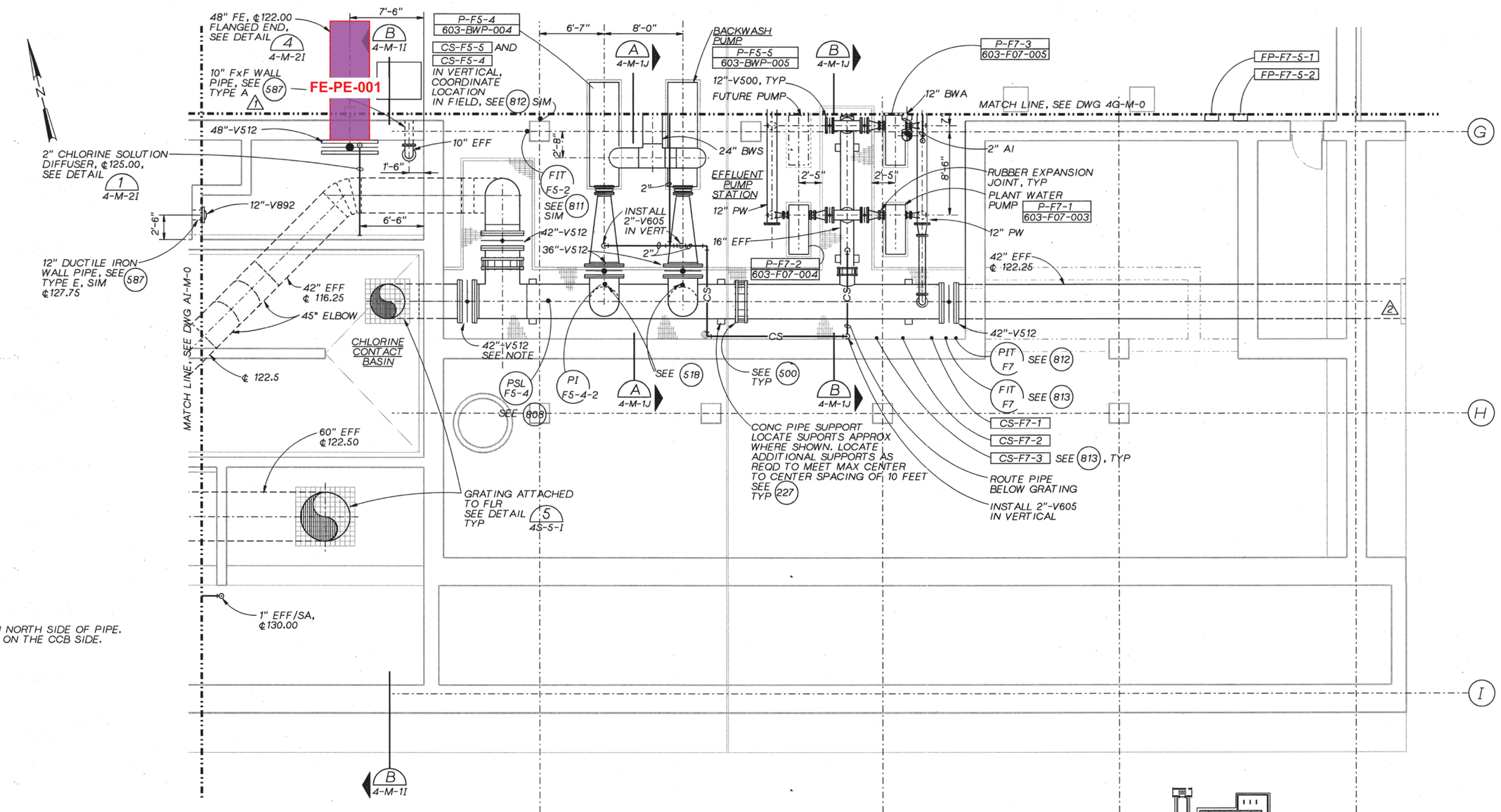

NOTE:
OPERATOR SET ON NORTH SIDE OF PIPE.
SEAT OF VALVE IS ON THE CCB SIDE.

LOWER LEVEL PLAN

3/16 "=1'-0"

RECORD DRAWINGS
REVISIONS DRAWN BY BAY **DATE** 7/1993

THESE RECORD DRAWINGS HAVE BEEN PREPARED, IN PART, ON THE BASIS OF INFORMATION COMPILED BY OTHERS. THEY ARE NOT INTENDED TO REPRESENT IN DETAIL THE EXACT LOCATION, TYPE OF COMPONENT NOR MANNER OF CONSTRUCTION. THE ENGINEER WILL NOT BE RESPONSIBLE FOR ANY ERRORS OR OMISSIONS WHICH HAVE BEEN INCORPORATED INTO THE RECORD DRAWINGS.

CH2M HILL

DSGN J HAYES/P MUELLER
DR KA ANDERSEN
CHK E SEEGMUELLLER
APVD RM BRACKEN

NO.	DATE	REVISION	BY	APVD
-	7/93	RECORD DRAWING	BAY	RMB
2	10/91	CL-T-148		
1	1/91	ADDENDUM NO. 4		

REUSE OF DOCUMENTS
THIS DOCUMENT, AND THE IDEAS AND DESIGNS INCORPORATED HEREIN, AS AN INSTRUMENT OF PROFESSIONAL SERVICE, IS THE PROPERTY OF CH2M HILL AND IS NOT TO BE USED, IN WHOLE OR IN PART, FOR ANY OTHER PROJECT WITHOUT THE WRITTEN AUTHORIZATION OF CH2M HILL.
©CH2M HILL

VERIFY SCALE
BAR IS ONE INCH ON ORIGINAL DRAWING.
0 1"
IF NOT ONE INCH ON THIS SHEET, ADJUST SCALES ACCORDINGLY.

ROCK CREEK
ADVANCED WASTE TREATMENT PLANT
UNIFIED SEWERAGE AGENCY
WASHINGTON COUNTY, OREGON

TERTIARY COMPLEX
MECHANICAL
LOWER LEVEL
PLAN J

SHEET 149
DWG NO. 4J-M-0
DATE NOV 1990
PROJ NO. PDX21262.M1

DATE: 1-7-93 VERSION NO. 17
DGN NAME:M2/MECH/RC4GM000.DGN

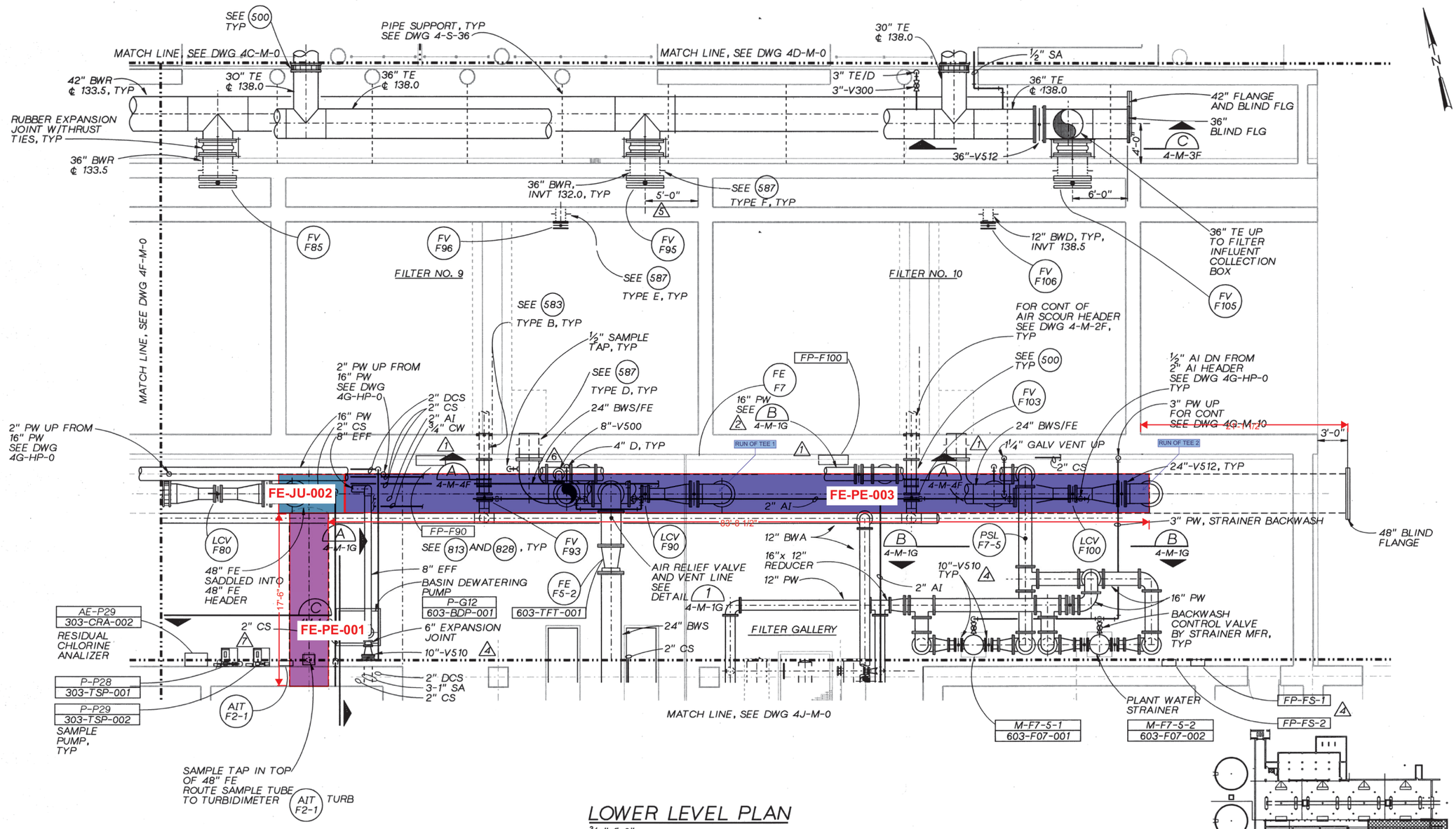

LOWER LEVEL PLAN

3/16 "=1'-0"

RECORD DRAWINGS

REVISIONS DRAWN BY BAY **DATE** 7/1993

THESE RECORD DRAWINGS HAVE BEPREPARED, IN PART, ON THE BASIS OF INFORMATION COMPILED BY OTHERS. THEY ARE NOT INTENDED TO REPRESENT IN DETAIL THE EXACT LOCATION, TYPE OF COMPONENT NOR MANNER OF CONSTRUCTION. THE ENGINEER WILL NOT BE RESPONSIBLE FOR ANY ERRORS OR OMISSIONS WHICH HAVE BEEN INCORPORATED INTO THE RECORD DRAWINGS.

NO.	DATE	REVISION	BY	APVD
–	7/93	RECORD DRAWING	BAY	RMB
7	1/93	CL-T-281		
6	8/91	CL-T-92		
5	3/91	CL-T-5		
4	12/90	ADDENDUM NO. 3		
2	1/92	CL-T-173		
1	1/91	ADDENDUM NO. 4	WJS	RMB

CH2MHILL

DSGN JD HAYES
B SNYDER/D WALTERS
DR D MCPHERSON
CHK E SEEGMUELLER
APVD RM BRACKEN

REUSE OF DOCUMENTS

THIS DOCUMENT, AND THE IDEAS AND DESIGNS INCORPORATED HEREIN, AS AN INSTRUMENT OF PROFESSIONAL SERVICE, IS THE PROPERTY OF CH2M HILL AND IS NOT TO BE USED, IN WHOLE OR IN PART, FOR ANY OTHER PROJECT WITHOUT THE WRITTEN AUTHORIZATION OF CH2M HILL.

©CH2M HILL

VERIFY SCALE
BAR IS ONE INCH ON ORIGINAL DRAWING.
0 1"
IF NOT ONE INCH ON THIS SHEET, ADJUST SCALES ACCORDINGLY.

ROCK CREEK
ADVANCED WASTE TREATMENT PLANT
UNIFIED SEWERAGE AGENCY
WASHINGTON COUNTY, OREGON

TERTIARY COMPLEX
MECHANICAL
LOWER LEVEL
PLAN G

SHEET 146
DWG NO. 4G-M-0
DATE NOV 1990
PROJ NO. PDX21262.M1

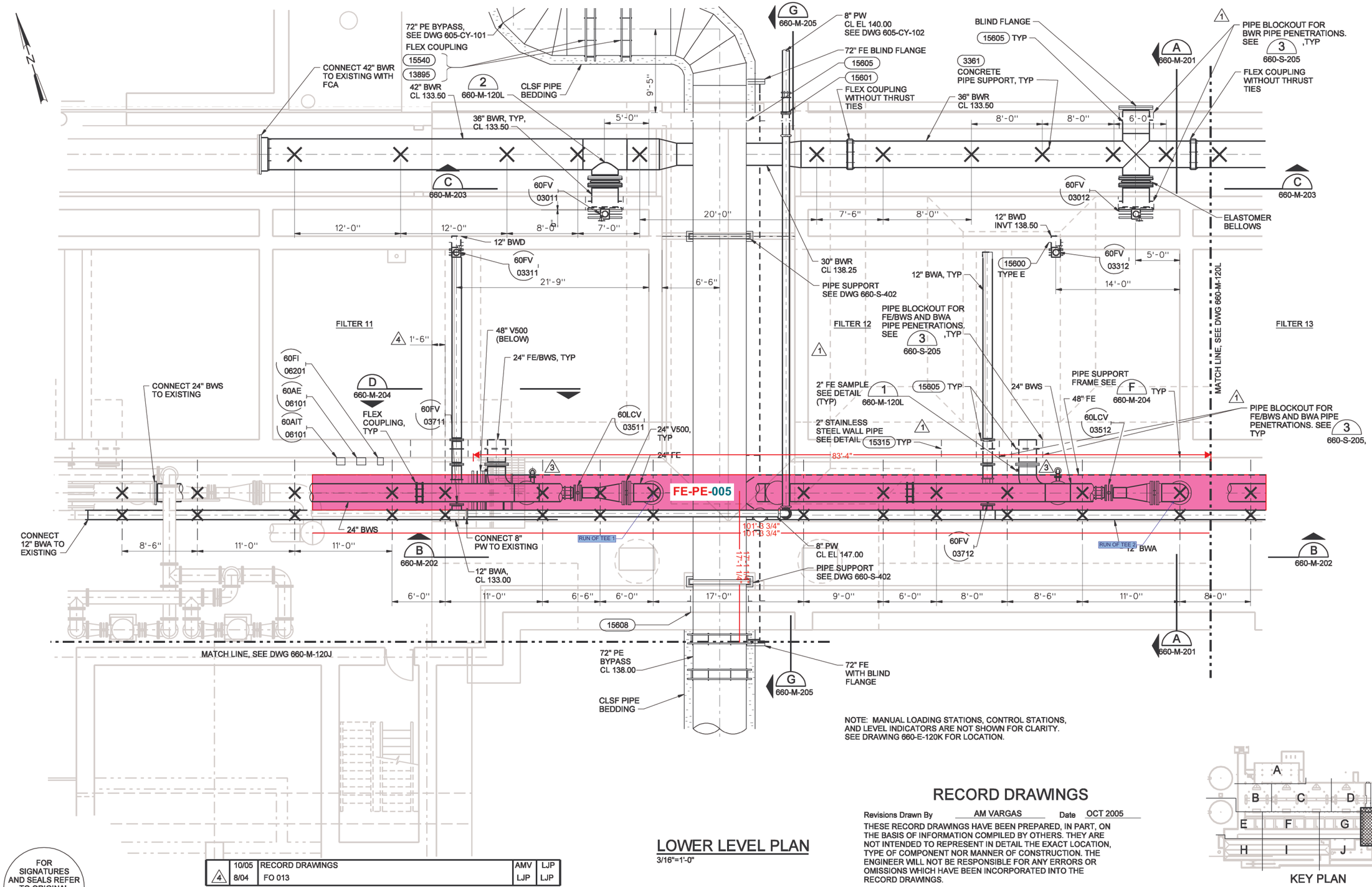

NOTE: MANUAL LOADING STATIONS, CONTROL STATIONS, AND LEVEL INDICATORS ARE NOT SHOWN FOR CLARITY. SEE DRAWING 660-E-120K FOR LOCATION.

LOWER LEVEL PLAN

3/16"=1'-0"

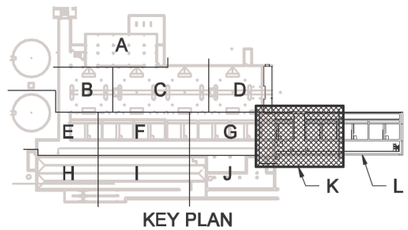

KEY PLAN

RECORD DRAWINGS

Revisions Drawn By AM VARGAS Date OCT 2005

THESE RECORD DRAWINGS HAVE BEEN PREPARED, IN PART, ON THE BASIS OF INFORMATION COMPILED BY OTHERS. THEY ARE NOT INTENDED TO REPRESENT IN DETAIL THE EXACT LOCATION, TYPE OF COMPONENT NOR MANNER OF CONSTRUCTION. THE ENGINEER WILL NOT BE RESPONSIBLE FOR ANY ERRORS OR OMISSIONS WHICH HAVE BEEN INCORPORATED INTO THE RECORD DRAWINGS.

FOR SIGNATURES AND SEALS REFER TO ORIGINAL DRAWINGS DATED OCTOBER 2003

NO.	DATE	REVISION	BY	APVD
4	10/05	RECORD DRAWINGS	AMV	LJP
	8/04	FO 013	LJP	LJP
3	5/04	RFI 118	LJP	LJP
2	5/04	RFI 038	MJM	LJP
1	11/03	ADDENDUM NO. 2	JFM	JEG

DSGN J.McCORMICK
DR G.JAMROS
CHK C.CLEGG
APVD JF GRIFFITHS

VERIFY SCALE
BAR IS ONE INCH ON ORIGINAL DRAWING. 0 1"
IF NOT ONE INCH ON THIS SHEET, ADJUST SCALES ACCORDINGLY.

CH2MHILL

ROCK CREEK FACILITY
PHASE 6A
EXPANSION AND UPGRADES
CLEAN WATER SERVICES
WASHINGTON COUNTY, OREGON

EAST FILTRATION
MECHANICAL
LOWER LEVEL PLAN - AREA K

SHEET	121
DWG	660-M-120K
DATE	MARCH 2004
PROJ	173962.CD

FILENAME: r660nm120kd.dgn PLOT DATE: 20-OCT-2005 PLOT TIME: 08:12:13

REUSE OF DOCUMENTS: THIS DOCUMENT, AND THE IDEAS AND DESIGNS INCORPORATED HEREIN, AS AN INSTRUMENT OF PROFESSIONAL SERVICE, IS THE PROPERTY OF CH2M HILL AND IS NOT TO BE USED, IN WHOLE OR IN PART, FOR ANY OTHER PROJECT WITHOUT THE WRITTEN AUTHORIZATION OF CH2MHILL. ©CH2M HILL

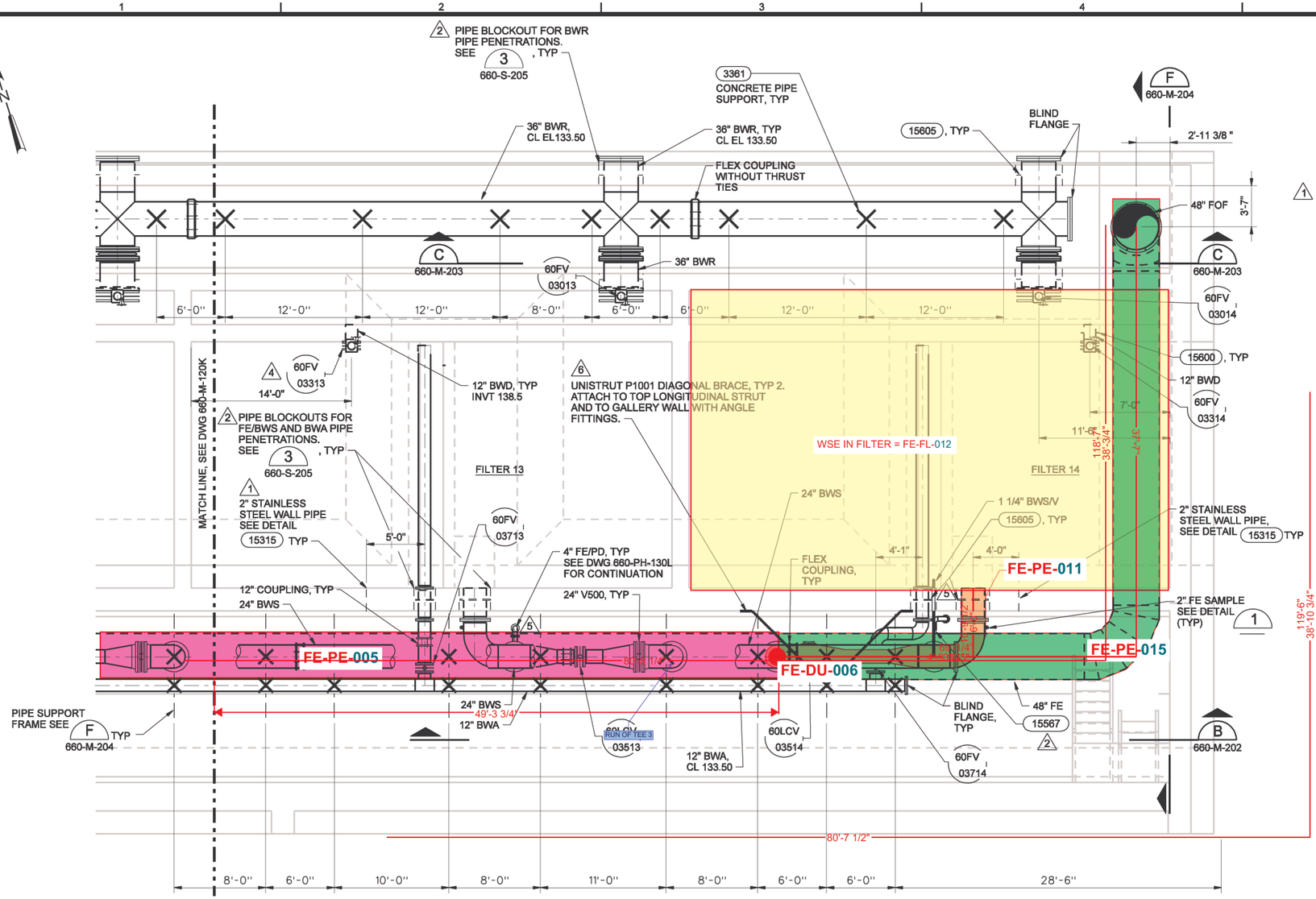

LOWER LEVEL PLAN
3/16"=1'-0"

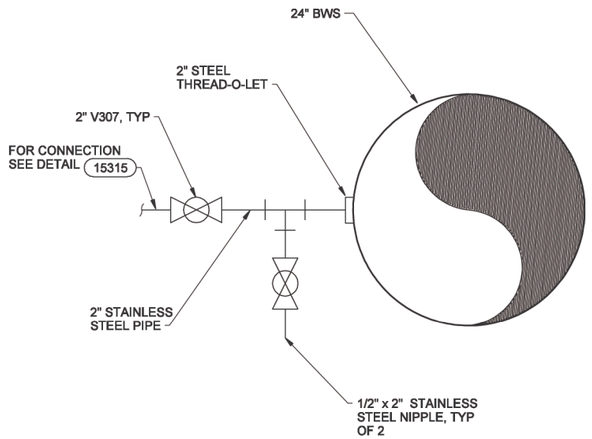

SAMPLE DETAIL 1
NTS — 663-M-120K, 660-M-120L, 660-M-202

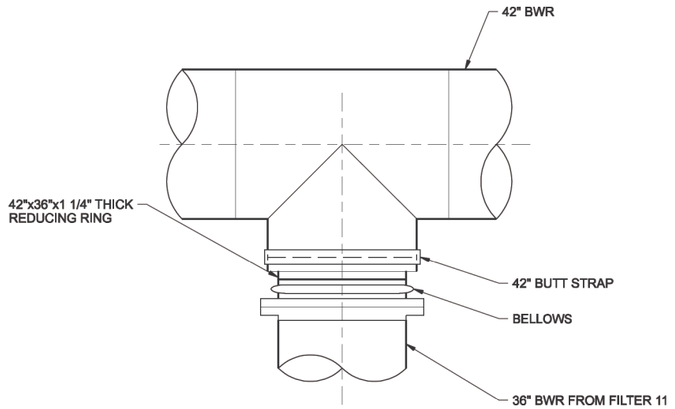

3 DETAIL 2
NTS — 660-M-120K

NOTES:

MANUAL LOADING STATIONS, CONTROL STATIONS, AND LEVEL INDICATORS ARE NOT SHOWN FOR CLARITY. SEE DRAWING 660-E-120K FOR LOCATION.

RECORD DRAWINGS

Revisions Drawn By AM VARGAS Date OCT 2005

THESE RECORD DRAWINGS HAVE BEEN PREPARED, IN PART, ON THE BASIS OF INFORMATION COMPILED BY OTHERS. THEY ARE NOT INTENDED TO REPRESENT IN DETAIL THE EXACT LOCATION, TYPE OF COMPONENT NOR MANNER OF CONSTRUCTION. THE ENGINEER WILL NOT BE RESPONSIBLE FOR ANY ERRORS OR OMISSIONS WHICH HAVE BEEN INCORPORATED INTO THE RECORD DRAWINGS.

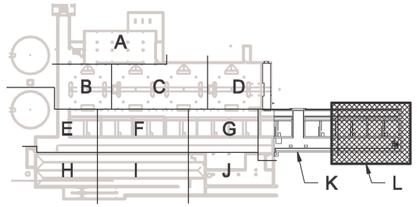

KEY PLAN

FOR SIGNATURES AND SEALS REFER TO ORIGINAL DRAWINGS DATED OCTOBER 2003

NO.	DATE	REVISION	BY	APVD
6	10/05	RECORD DRAWINGS	AMV	LJP
6	8/05	RFI 131	MJM	LJP
5	5/05	RFI 118	LJP	LJP
4	2/05	RFI 102	GVO	LJP
3	11/04	RFI 095	DE	LJP
2	5/04	RFI 038	MJM	LJP
1	11/03	ADDENDUM NO. 2	JFM	JEG

DSGN J McCORMICK
DR G JAMROS
CHK K CLEGG
APVD JE GRIFFITHS

VERIFY SCALE
BAR IS ONE INCH ON ORIGINAL DRAWING. 0 1"
IF NOT ONE INCH ON THIS SHEET, ADJUST SCALES ACCORDINGLY.

CH2MHILL

ROCK CREEK FACILITY
PHASE 6A
EXPANSION AND UPGRADES
CLEAN WATER SERVICES
WASHINGTON COUNTY, OREGON

EAST FILTRATION
MECHANICAL
LOWER LEVEL PLAN - AREA L
AND DETAILS

SHEET	122
DWG	660-M-120L
DATE	MARCH 2004
PROJ	173962.CD

FILENAME: r660nm120ld.dgn PLOT DATE: 26-OCT-2005 PLOT TIME: 09:44:07

REUSE OF DOCUMENTS: THIS DOCUMENT, AND THE IDEAS AND DESIGNS INCORPORATED HEREIN, AS AN INSTRUMENT OF PROFESSIONAL SERVICE, IS THE PROPERTY OF CH2M HILL AND IS NOT TO BE USED, IN WHOLE OR IN PART, FOR ANY OTHER PROJECT WITHOUT THE WRITTEN AUTHORIZATION OF CH2MHILL. ©CH2M HILL

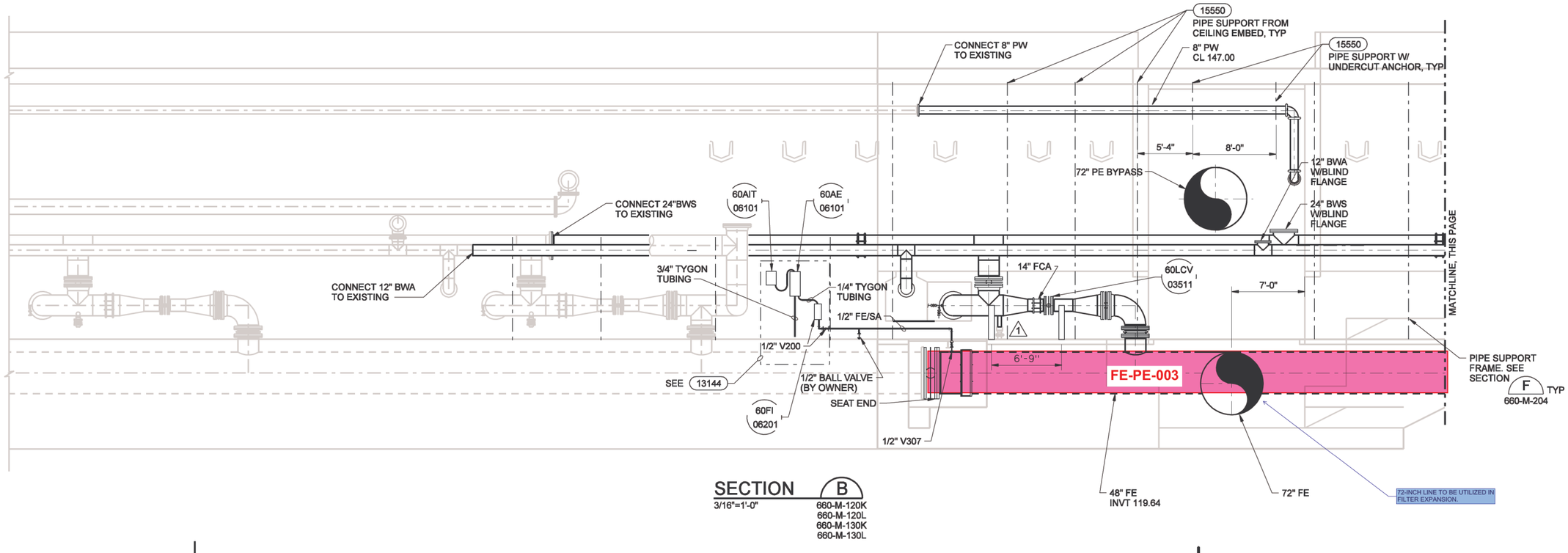

SECTION B
3/16"=1'-0"
660-M-120K
660-M-120L
660-M-130K
660-M-130L

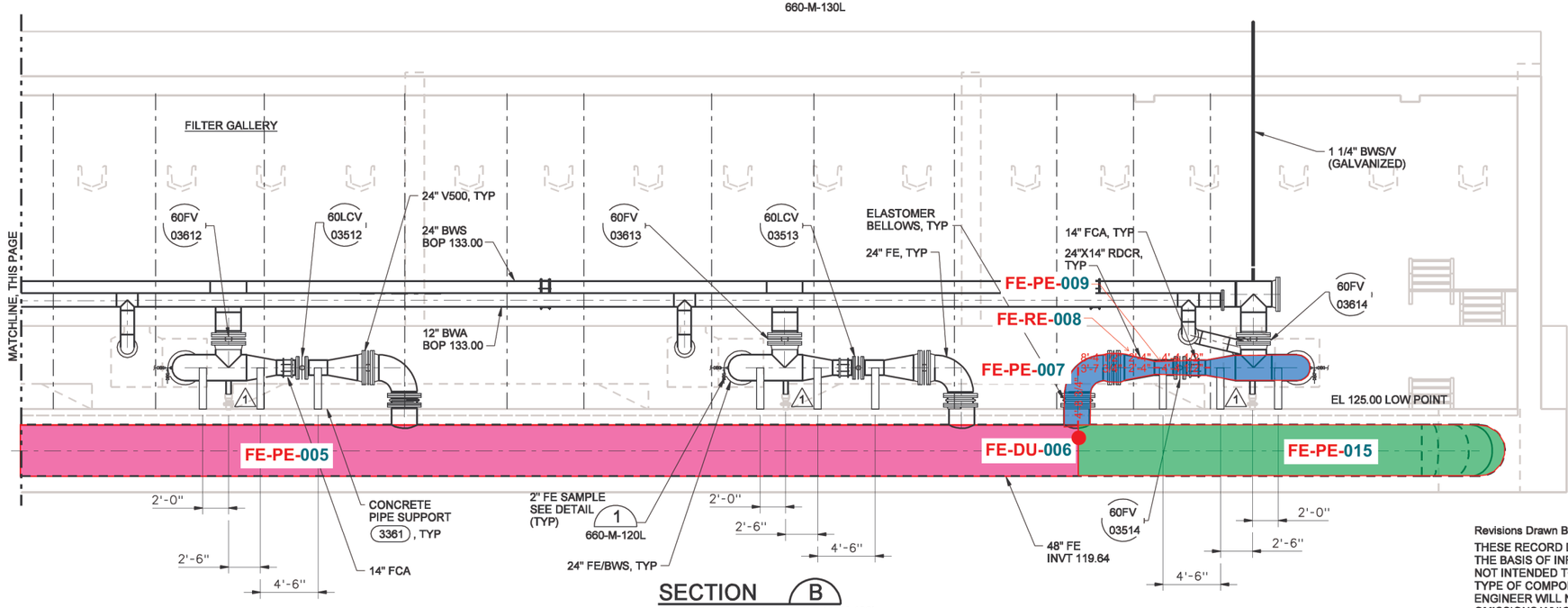

SECTION B
3/16"=1'-0"
660-M-120K, 660-M-120L, 660-M-130K, 660-M-130L

RECORD DRAWINGS

Revisions Drawn By AM VARGAS Date OCT 2005

THESE RECORD DRAWINGS HAVE BEEN PREPARED, IN PART, ON THE BASIS OF INFORMATION COMPILED BY OTHERS. THEY ARE NOT INTENDED TO REPRESENT IN DETAIL THE EXACT LOCATION, TYPE OF COMPONENT NOR MANNER OF CONSTRUCTION. THE ENGINEER WILL NOT BE RESPONSIBLE FOR ANY ERRORS OR OMISSIONS WHICH HAVE BEEN INCORPORATED INTO THE RECORD DRAWINGS.

FOR SIGNATURES AND SEALS REFER TO ORIGINAL DRAWINGS DATED OCTOBER 2003

DSGN J McCORMICK					
DR KL McCOY					
CHK K CLEGG					
APVD JE GRIFFITHS					
1	10/05	RECORD DRAWINGS	AMV	LJP	
	5/05	RFI 118	LJP	LJP	
NO.	DATE	REVISION	BY	APVD	

VERIFY SCALE
BAR IS ONE INCH ON ORIGINAL DRAWING.
0 1"
IF NOT ONE INCH ON THIS SHEET, ADJUST SCALES ACCORDINGLY.

CH2MHILL

ROCK CREEK FACILITY
PHASE 6A
EXPANSION AND UPGRADES
CLEAN WATER SERVICES
WASHINGTON COUNTY, OREGON

EAST FILTRATION
MECHANICAL SECTIONS

SHEET	128
DWG	660-M-202
DATE	MARCH 2004
PROJ	173962.CD

FILENAME: r660nm202ad.dgn PLOT DATE: 26-OCT-2005 PLOT TIME: 10:02:13

REUSE OF DOCUMENTS: THIS DOCUMENT, AND THE IDEAS AND DESIGNS INCORPORATED HEREIN, AS AN INSTRUMENT OF PROFESSIONAL SERVICE, IS THE PROPERTY OF CH2M HILL AND IS NOT TO BE USED, IN WHOLE OR IN PART, FOR ANY OTHER PROJECT WITHOUT THE WRITTEN AUTHORIZATION OF CH2MHILL. ©CH2M HILL

DATE: 6/30/93 VERSION NO.12
DGN NAME: M2/MECH/RC4M01E.DGN

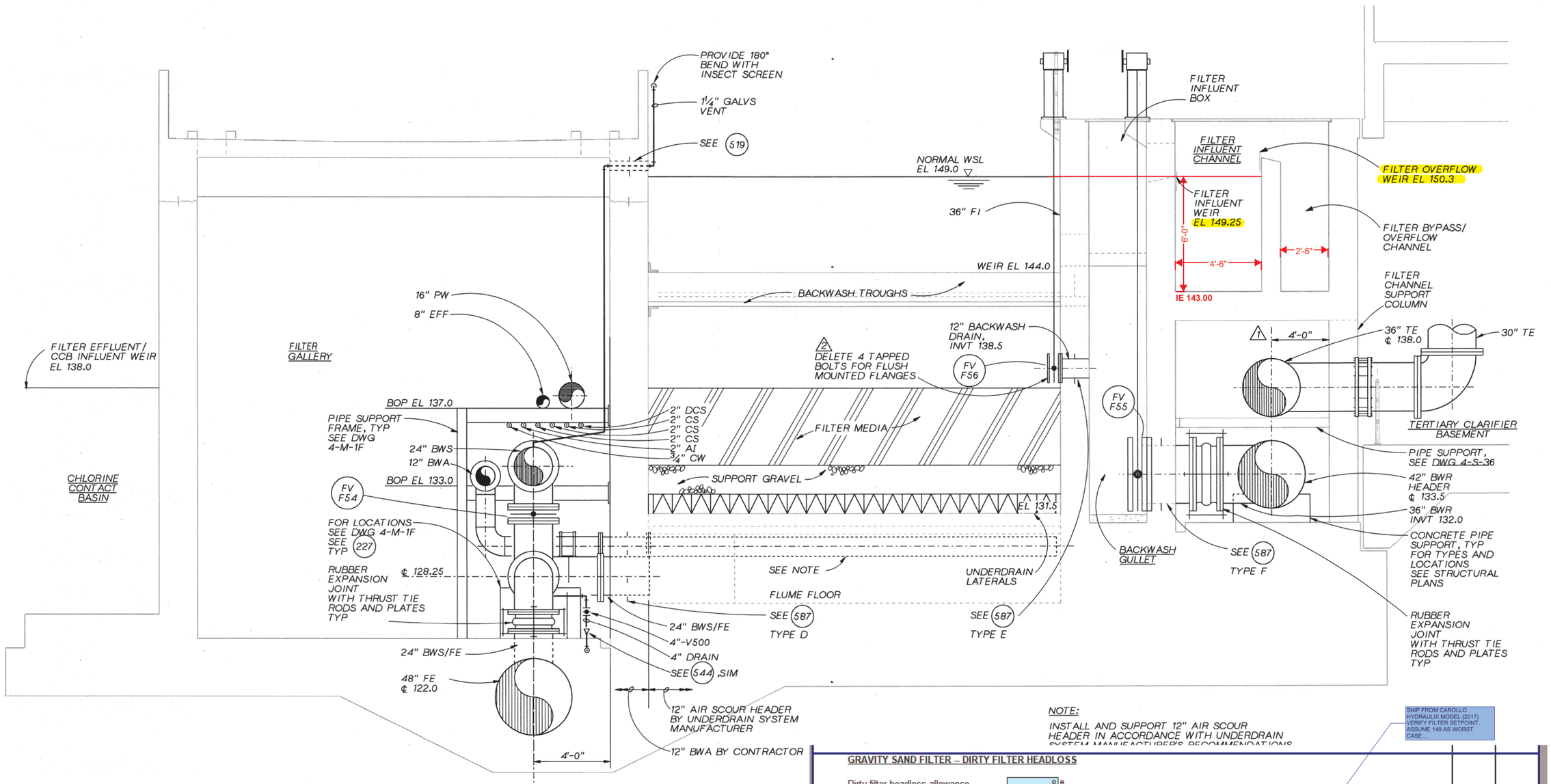

SECTION

3/8" =1'-0"

NOTE:

INSTALL AND SUPPORT 12" AIR SCOUR HEADER IN ACCORDANCE WITH UNDERDRAIN SYSTEM MANUFACTURER'S RECOMMENDATIONS

SNIP FROM CAROLLO HYDRAULIX MODEL (2017) VERIFY FILTER SETPOINT. ASSUME 149 AS WORST CASE...

GRAVITY SAND FILTER -- DIRTY FILTER HEADLOSS

Dirty filter headloss allowance	8 ft	
Total dirty filter headloss available	-11.32 ft	
Filter Setpoint Current	147.00 ft	
Filter Setpoint CH2M Hill	149.00 ft	
Condition Upstream of Filter		149.00 149.00

RECORD DRAWINGS
REVISIONS DRAWN BY BAY **DATE** 7/1993

THESE RECORD DRAWINGS HAVE BEEN PREPARED, IN PART, ON THE BASIS OF INFORMATION COMPILED BY OTHERS. THEY ARE NOT INTENDED TO REPRESENT IN DETAIL THE EXACT LOCATION, TYPE OF COMPONENT NOR MANNER OF CONSTRUCTION. THE ENGINEER WILL NOT BE RESPONSIBLE FOR ANY ERRORS OR OMISSIONS WHICH HAVE BEEN INCORPORATED INTO THE RECORD DRAWINGS.

CH2MHILL

DSGN B SNYDER/D WALTERS
DR KL MCCOY
CHK E SEEGMUELLER
APVD

NO.	DATE	REVISION	BY	APVD
-	7/93	RECORD DRAWING	BAY	RMB
2	6/91	CL-T-61		
1	3/91	CL-T-5		

REUSE OF DOCUMENTS
THIS DOCUMENT, AND THE IDEAS AND DESIGNS INCORPORATED HEREIN, AS AN INSTRUMENT OF PROFESSIONAL SERVICE, IS THE PROPERTY OF CH2M HILL AND IS NOT TO BE USED, IN WHOLE OR IN PART, FOR ANY OTHER PROJECT WITHOUT THE WRITTEN AUTHORIZATION OF CH2M HILL.
©CH2M HILL

VERIFY SCALE
BAR IS ONE INCH ON ORIGINAL DRAWING.
0 1"
IF NOT ONE INCH ON THIS SHEET, ADJUST SCALES ACCORDINGLY.

ROCK CREEK
ADVANCED WASTE TREATMENT PLANT
UNIFIED SEWERAGE AGENCY
WASHINGTON COUNTY, OREGON

TERTIARY COMPLEX
MECHANICAL
FILTER AND FILTER GALLERY
SECTION

SHEET 178
DWG NO. 4-M-2F
DATE NOV 1990
PROJ NO. PDX21262.M1

HYDRAULIC SEGMENT 12a

PROJECT : Rock Creek Advanced WWTP Plan
Clean Water Services

JOB # : 7182A00 **REVISION:** 38

CHECKED : **DATE :** **BY :** **DATE :**

				Equation Ref.	HGL	EGL
GRAVITY FILTER				{ 10 }		
MINIMUM HEAD FOR FILTRATION	8	FT				
Is there enough head to run the filters?	YES					
GRAVITY SAND FILTER -- CLEAN FILTER HEADLOSS (Sheet 178, Nov 1990)				{ 10 }		
Flow	10.8	mgd =	16.7 cfs			
Area of Filter Bed	900	sf				
Superficial Velocity, Vo	0.019	fps				
Vo, SI Units	0.006	m/s				
Kinematic viscosity, v	0.0000011	m^2/s				
Filter Underdrain						
Lateral Length	16.00					
Loading Rate	8.33	gpm/sf				
Head Loss K*Vh	0.44	ft				
Gravel Underdrain Layer						
Sum Xi/di^2=	0.40		*Reference: Kozeny Equation*			
e=	0.40					
k=	5.00					
Sphericity=	0.80					
g	980	cm/s^2				
Kinematic Viscosity	0.011	cm/s^2				
Loading rate	8.33	gpm/sf				
Superficial Velocity	1.11	ft/min				
Superficial Velocity	0.57	cm/s				
head loss/foot =	0.40					
Media Depth	18.00	in				
Head Loss	0.60	ft				
Sand Layer						
e=	0.40		*Reference: Ergun Equation, "Predicting Fluidization and Expansion of Filter Media*			
d(10) / ES	0.70	mm	*by John Cleasby, et. al., June 1981, ASCE, Environmental Engineering*			
Sphericity	0.85					
Equivalent Diameter	0.77	mm				
Equivalent Diameter	0.08	cm				
Specific Surface/6 or (1/$deq)	15.28	cm				
g	980	cm/s^2				
Kinematic Viscosity	0.011	cm/s^2				
Loading rate	8.33	gpm/sf				
Superficial Velocity	1.11	ft/min				
Superficial Velocity	0.57	cm/sec				
Ergun Viscous term	1.25	ft/ft				
Ergun Kinetic term	0.08	ft/ft				
Head Loss/ft=	1.33					
Media Depth, (in)=	0.00	in				
Head Loss, (ft)=	0.00	ft				
Anthracite Layer						
e=	0.50		*Reference: Ergun Equation, "Predicting Fluidization and Expansion of Filter Media*			
d(10) / ES	1.40	mm	*by John Cleasby, et. al., June 1981, ASCE, Environmental Engineering*			
Sphericity	0.70					
Equivalent Diameter	1.54	mm				
Equivalent Diameter	0.15	cm				
Specific Surface/6 or (1/$deq)	9.28	cm				
g	980	cm/s^2				
Kinematic Viscosity	0.011	cm/s^2				
Loading rate	8.33	gpm/sf				
Superficial Velocity	1.11	ft/min				
Superficial Velocity	0.57	cm/sec				
Ergun viscous term	0.16	ft/ft				
Ergun kinetic term	0.02	ft/ft				
Head Loss/ft=	0.19					
Media Depth	48.00	in				
Head Loss	0.74	ft				
Total Filter Energy Loss	1.79	ft				
			Condition Upstream of Filter		160.32	*160.32*

NO ACCOUNTING FOR HEAD LOSS THROUGH FILTERS, INFORMATION INDICATES THAT THE CURRENT FILTER SYSTEM RUNS USING A SINGLE MEDIA, BUT NO INFORMATION ON THAT MEDIA IS AVAILABLE

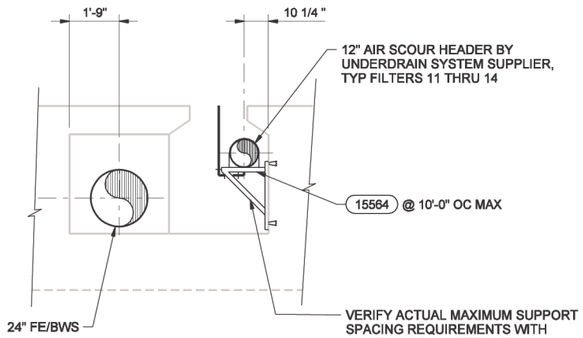

SECTION D
3/8"=1'-0" 660-M-120K

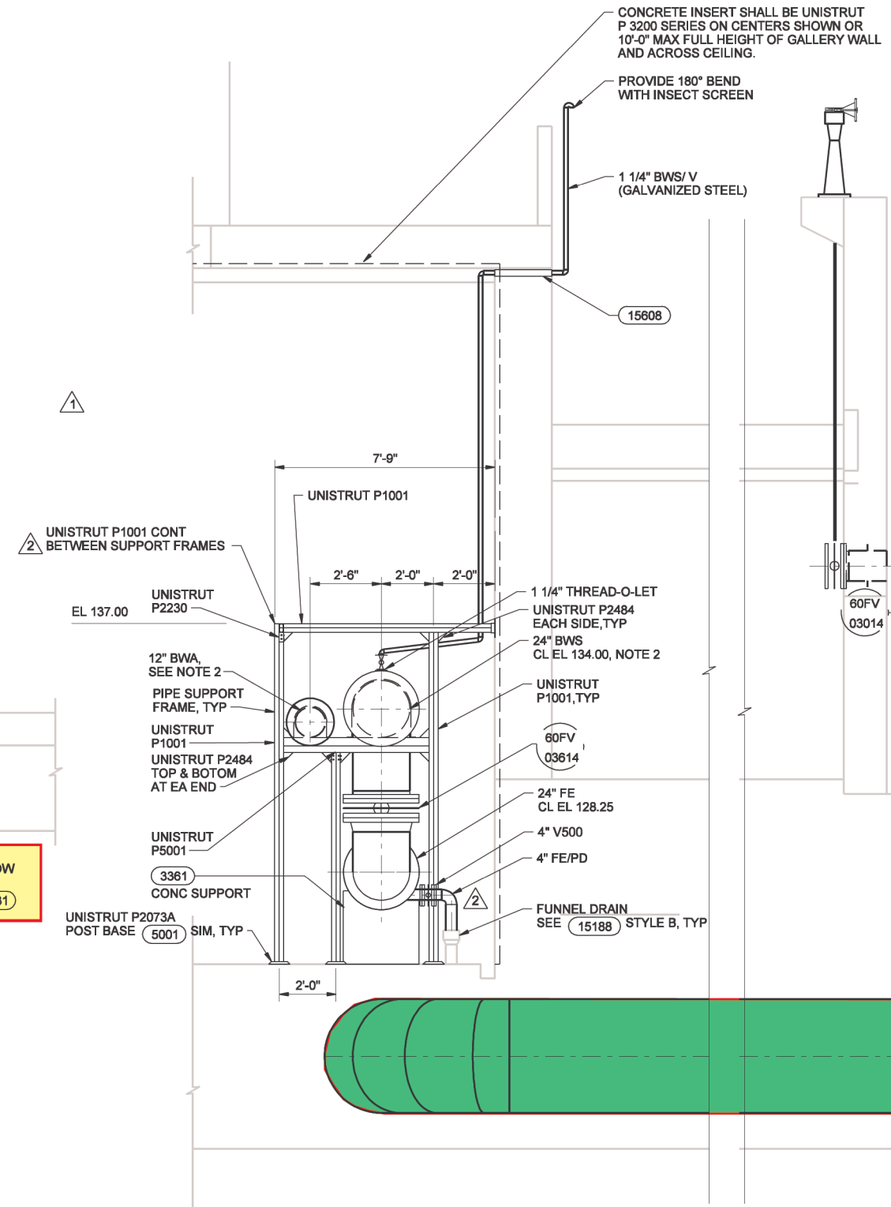

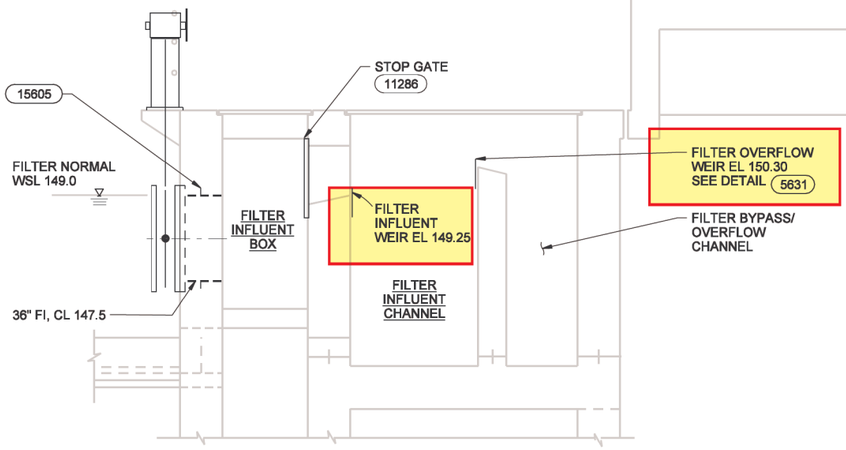

SECTION E
3/8"=1'-0" 660-M-130K

NOTES:

1. THIS SECTION TYPICAL FILTERS 10 THROUGH 14.

RECORD DRAWINGS

Revisions Drawn By AM VARGAS Date OCT 2005

THESE RECORD DRAWINGS HAVE BEEN PREPARED, IN PART, ON THE BASIS OF INFORMATION COMPILED BY OTHERS. THEY ARE NOT INTENDED TO REPRESENT IN DETAIL THE EXACT LOCATION, TYPE OF COMPONENT NOR MANNER OF CONSTRUCTION. THE ENGINEER WILL NOT BE RESPONSIBLE FOR ANY ERRORS OR OMISSIONS WHICH HAVE BEEN INCORPORATED INTO THE RECORD DRAWINGS.

SECTION F
3/8"=1'-0" 660-M-120L 660-M-130L 660-M-205 660-M-201

NOTE:

2. PROVIDE 3/8"x 2" PIPE STRAP AT EACH PIPE SUPPORT, UNISTRUT P2558 SIM

FOR SIGNATURES AND SEALS REFER TO ORIGINAL DRAWINGS DATED OCTOBER 2003

DSGN J.McCORMICK						
DR KL McCOY	2	10/05	RECORD DRAWINGS	AMV	LJP	
CHK K CLEGG	1	8/05	RFI 131	MJM	LJP	
APVD JE GRIFFITHS		12/03	ADDENDUM NO.3	DE	JEG	
	NO.	DATE	REVISION	BY	APVD	

VERIFY SCALE
BAR IS ONE INCH ON ORIGINAL DRAWING. 0 1"
IF NOT ONE INCH ON THIS SHEET, ADJUST SCALES ACCORDINGLY.

CH2MHILL

ROCK CREEK FACILITY
PHASE 6A
EXPANSION AND UPGRADES
CLEAN WATER SERVICES
WASHINGTON COUNTY, OREGON

EAST FILTRATION
MECHANICAL
SECTIONS

SHEET	130
DWG	660-M-204
DATE	MARCH 2004
PROJ	173962.CD

FILENAME: r660nm203d.dgn PLOT DATE: 20-OCT-2005 PLOT TIME: 09:13:57

REUSE OF DOCUMENTS: THIS DOCUMENT, AND THE IDEAS AND DESIGNS INCORPORATED HEREIN, AS AN INSTRUMENT OF PROFESSIONAL SERVICE, IS THE PROPERTY OF CH2M HILL AND IS NOT TO BE USED, IN WHOLE OR IN PART, FOR ANY OTHER PROJECT WITHOUT THE WRITTEN AUTHORIZATION OF CH2MHILL. ©CH2M HILL

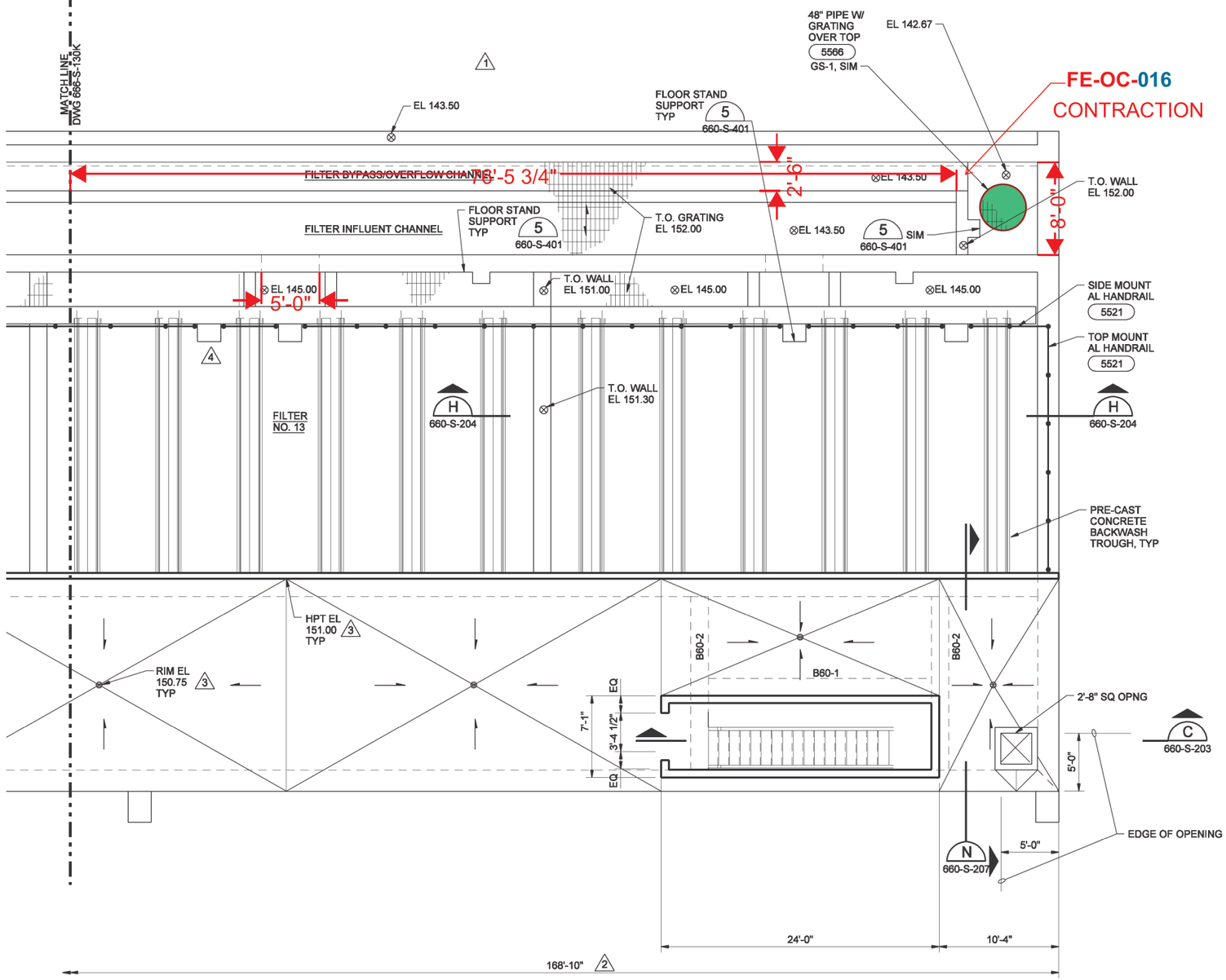

LEGEND:

B60-1 CONCRETE BEAM TYPE. FOR REINF & DETAIL SEE 3366

GROUND LEVEL PLAN

3/16"=1'-0"

RECORD DRAWINGS

Revisions Drawn By AM VARGAS Date OCT 2005

THESE RECORD DRAWINGS HAVE BEEN PREPARED, IN PART, ON THE BASIS OF INFORMATION COMPILED BY OTHERS. THEY ARE NOT INTENDED TO REPRESENT IN DETAIL THE EXACT LOCATION, TYPE OF COMPONENT NOR MANNER OF CONSTRUCTION. THE ENGINEER WILL NOT BE RESPONSIBLE FOR ANY ERRORS OR OMISSIONS WHICH HAVE BEEN INCORPORATED INTO THE RECORD DRAWINGS.

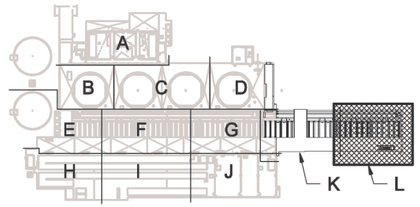

KEY PLAN

FOR SIGNATURES AND SEALS REFER TO ORIGINAL DRAWINGS DATED OCTOBER 2003

NO.	DATE	REVISION	BY	APVD
4	2/05	RFI 102, 102.1	LJP	LJP
	10/05	RECORD DRAWINGS	AMV	LJP
3	10/04	FO 017	SMK	LJP
2	4/04	RFI 029	LJP	LJP
1	11/03	ADDENDUM NO. 2	MJM	JEG

DSGN MJ MERKLEIN
DR KL AQUINO
CHK S PITKIN
APVD JF GRIFFITHS

VERIFY SCALE
BAR IS ONE INCH ON ORIGINAL DRAWING.
0 1"
IF NOT ONE INCH ON THIS SHEET, ADJUST SCALES ACCORDINGLY.

CH2MHILL

ROCK CREEK FACILITY
PHASE 6A
EXPANSION AND UPGRADES
CLEAN WATER SERVICES
WASHINGTON COUNTY, OREGON

EAST FILTRATION
STRUCTURAL
GROUND LEVEL PLAN - AREA L

SHEET	111
DWG	660-S-130L
DATE	MARCH 2004
PROJ	173962.CD

FILENAME: r660ns130ld.dgn PLOT DATE: 26-OCT-2005 PLOT TIME: 09:21:34

REUSE OF DOCUMENTS: THIS DOCUMENT, AND THE IDEAS AND DESIGNS INCORPORATED HEREIN, AS AN INSTRUMENT OF PROFESSIONAL SERVICE, IS THE PROPERTY OF CH2M HILL AND IS NOT TO BE USED, IN WHOLE OR IN PART, FOR ANY OTHER PROJECT WITHOUT THE WRITTEN AUTHORIZATION OF CH2MHILL. ©CH2M HILL

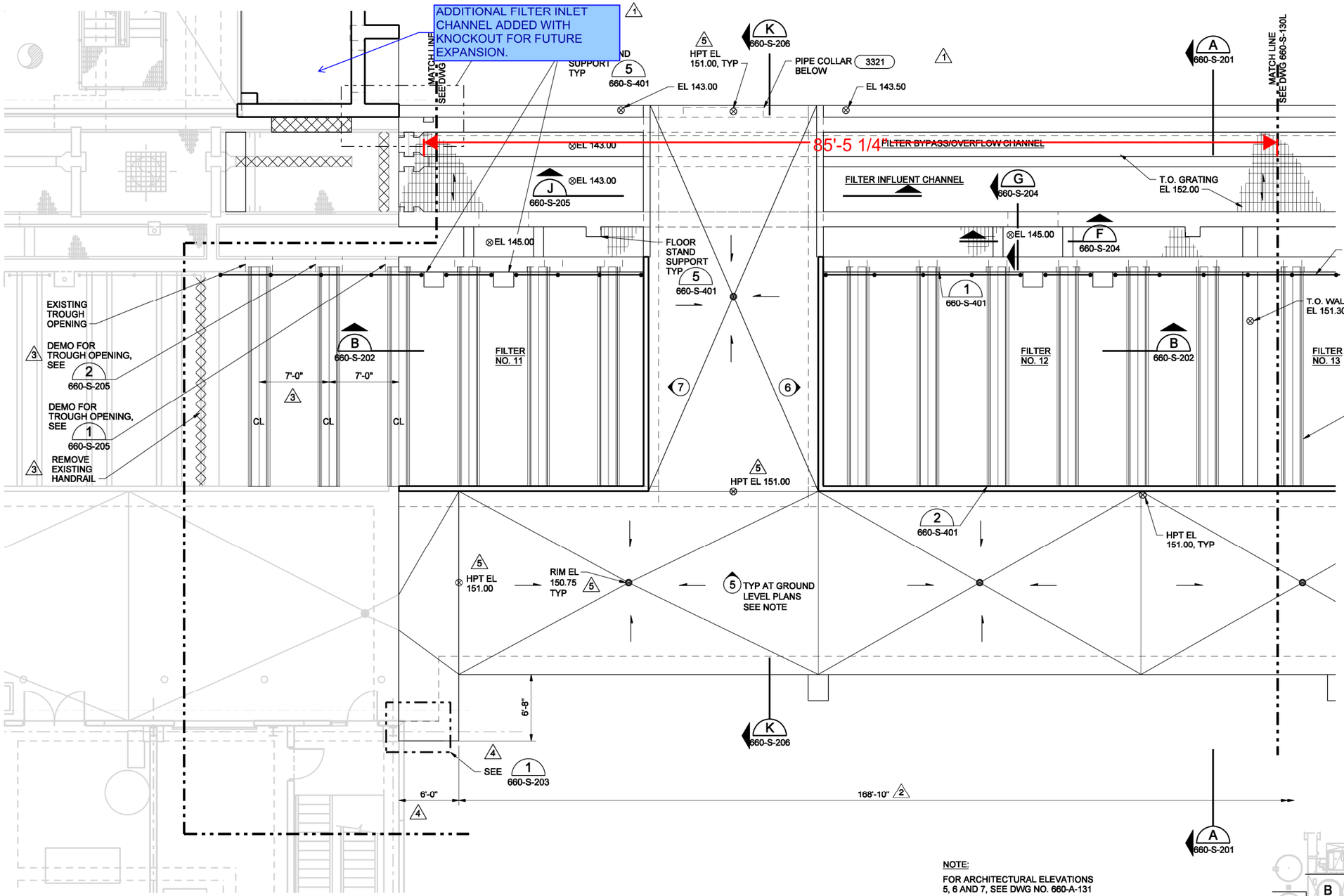

NOTE:
FOR ARCHITECTURAL ELEVATIONS 5, 6 AND 7, SEE DWG NO. 660-A-131

RECORD DRAWINGS
Revisions Drawn By GS MCFARLAND Date OCT 2005
THESE RECORD DRAWINGS HAVE BEEN PREPARED, IN PART, ON THE BASIS OF INFORMATION COMPILED BY OTHERS. THEY ARE NOT INTENDED TO REPRESENT IN DETAIL THE EXACT LOCATION, TYPE OF COMPONENT NOR MANNER OF CONSTRUCTION. THE ENGINEER WILL NOT BE RESPONSIBLE FOR ANY ERRORS OR OMISSIONS WHICH HAVE BEEN INCORPORATED INTO THE RECORD DRAWINGS.

REUSE OF DOCUMENTS: THIS DOCUMENT, AND THE IDEAS AND DESIGNS INCORPORATED HEREIN, AS AN INSTRUMENT OF PROFESSIONAL SERVICE, IS THE PROPERTY OF CH2M HILL AND IS NOT TO BE USED, IN WHOLE OR IN PART, FOR ANY OTHER PROJECT WITHOUT THE WRITTEN AUTHORIZATION OF CH2MHILL. ©CH2M HILL

KEY PLAN
A B C D E F G H I J K L

GROUND LEVEL PLAN
3/16"=1'-0"

NO.	DATE	REVISION	BY	APVD
	10/05	RECORD DRAWINGS	GSM	LJP
5	10/04	FO 017	SMK	LJP
4	4/04	RFI 032	TSP	LJP
3	4/04	RFQ 002	TSP	LJP
2	4/04	RFI 029	LJP	LJP
1	11/03	ADDENDUM NO. 2	MJM	JEG

FOR SIGNATURES AND SEALS REFER TO ORIGINAL DRAWINGS DATED OCTOBER 2003

DSGN MJ MERKLEIN
DR KL AQUINO
CHK S PITKIN
APVD JF GRIFFITHS

VERIFY SCALE
BAR IS ONE INCH ON ORIGINAL DRAWING. 0 1"
IF NOT ONE INCH ON THIS SHEET, ADJUST SCALES ACCORDINGLY.

CH2MHILL

ROCK CREEK FACILITY
PHASE 6A
EXPANSION AND UPGRADES
CLEAN WATER SERVICES
WASHINGTON COUNTY, OREGON

EAST FILTRATION
STRUCTURAL
GROUND LEVEL PLAN - AREA K

SHEET	110
DWG	660-S-130K
DATE	MARCH 2004
PROJ	173962.CD

FILENAME: r660ns130kd.dgn PLOT DATE: 26-OCT-2005 PLOT TIME: 08:29:23

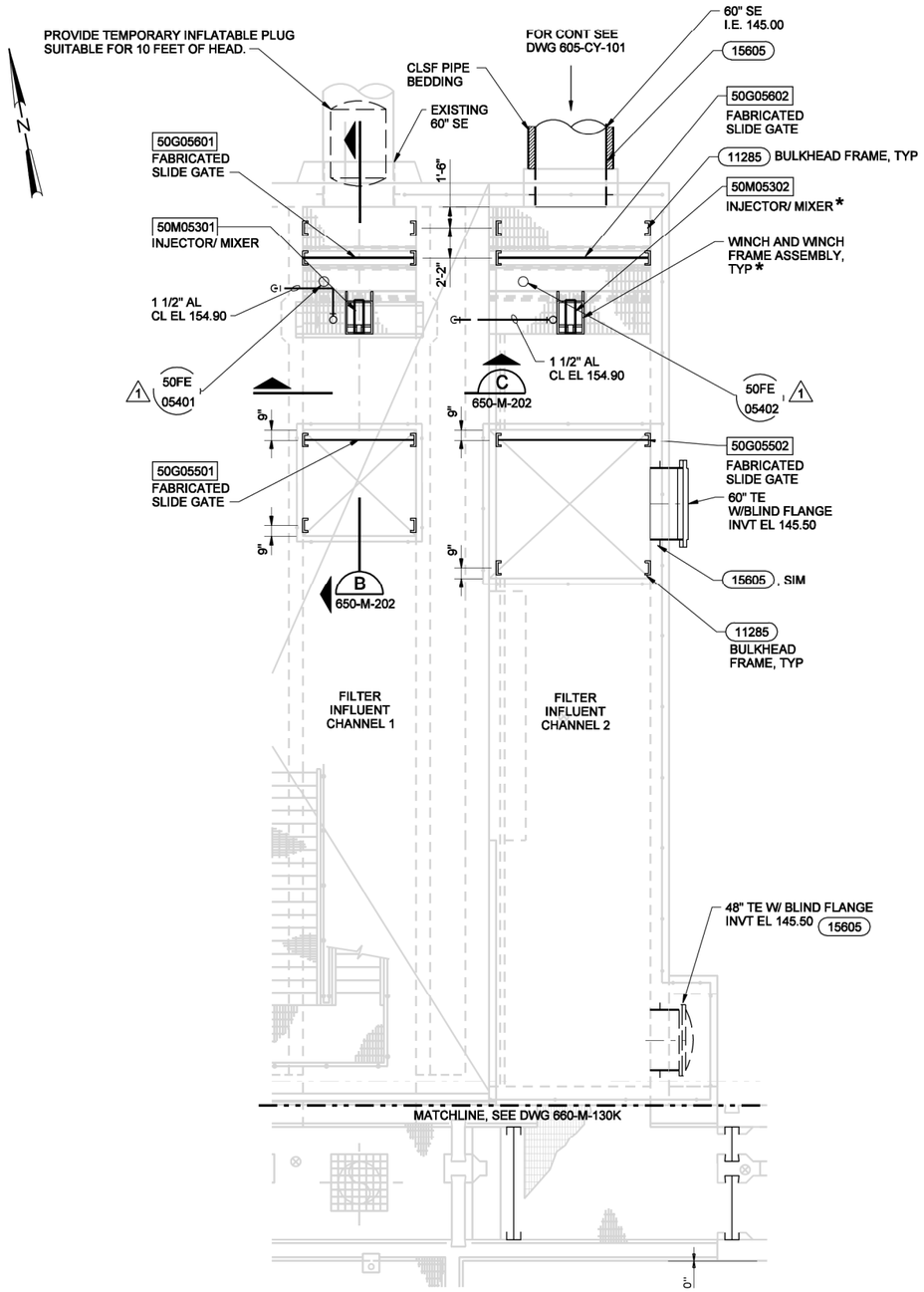

RECORD DRAWINGS

Revisions Drawn By AM VARGAS Date OCT 2005

THESE RECORD DRAWINGS HAVE BEEN PREPARED, IN PART, ON THE BASIS OF INFORMATION COMPILED BY OTHERS. THEY ARE NOT INTENDED TO REPRESENT IN DETAIL THE EXACT LOCATION, TYPE OF COMPONENT NOR MANNER OF CONSTRUCTION. THE ENGINEER WILL NOT BE RESPONSIBLE FOR ANY ERRORS OR OMISSIONS WHICH HAVE BEEN INCORPORATED INTO THE RECORD DRAWINGS.

NOTES:

* SUPPLIED BY ALUM INJECTOR/ MIXER SUPPLIER.

GROUND FLOOR PARTIAL PLAN - AREA D

3/16"=1'-0"

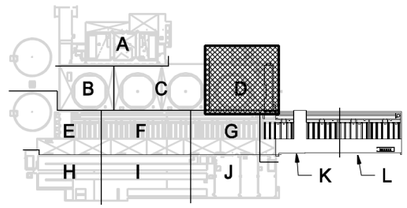

KEY PLAN

THIS DOCUMENT, AND THE IDEAS AND DESIGNS INCORPORATED HEREIN, AS AN INSTRUMENT OF PROFESSIONAL SERVICE, IS THE PROPERTY OF CH2M HILL AND IS NOT TO BE USED, IN WHOLE OR IN PART, FOR ANY OTHER PROJECT WITHOUT THE WRITTEN AUTHORIZATION OF CH2MHILL. ©CH2M HILL

REUSE OF DOCUMENTS:

FOR SIGNATURES AND SEALS REFER TO ORIGINAL DRAWINGS DATED OCTOBER 2003

DSGN J.McCORMICK						VERIFY SCALE
DR G.JAMROS		10/04	RECORD DRAWINGS	GSM	LJP	BAR IS ONE INCH ON ORIGINAL DRAWING. 0 1"
CHK K.CLEGG	1	6/04	RFI 051	LJP	LJP	IF NOT ONE INCH ON THIS SHEET, ADJUST SCALES ACCORDINGLY.
APVD JF GRIFFITHS	NO.	DATE	REVISION	BY	APVD	

CH2MHILL

ROCK CREEK FACILITY
PHASE 6A
EXPANSION AND UPGRADES
CLEAN WATER SERVICES
WASHINGTON COUNTY, OREGON

EAST TERTIARY TREATMENT
MECHANICAL
GROUND FLOOR PARTIAL PLAN - AREA D

SHEET	88
DWG	650-M-130D
DATE	MARCH 2004
PROJ	173962.CD

FILENAME: r650nm130dd.dgn PLOT DATE: 24-OCT-2005 PLOT TIME: 13:19:55

DATE: 6/28/93 VERSION NO. 13
DGN NAME: M2/MECH/RC4EM100.DGN

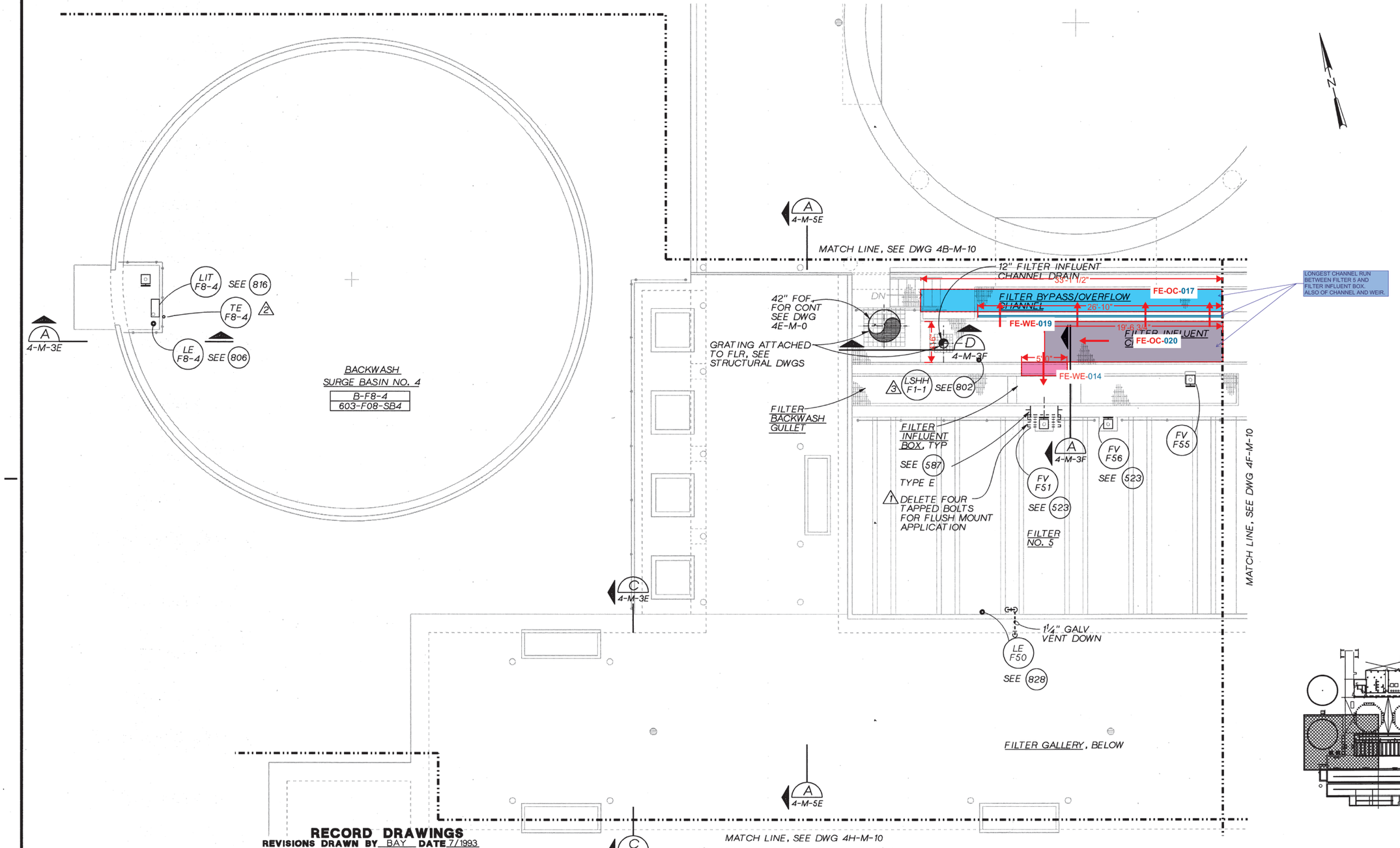

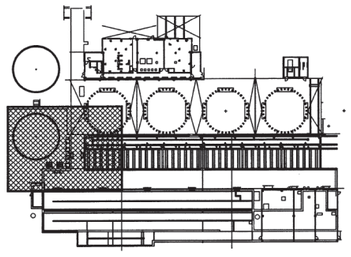

GROUND LEVEL PLAN

3/16 "=1'-0"

RECORD DRAWINGS
REVISIONS DRAWN BY BAY **DATE** 7/1993

THESE RECORD DRAWINGS HAVE BEEN PREPARED, IN PART, ON THE BASIS OF INFORMATION COMPILED BY OTHERS. THEY ARE NOT INTENDED TO REPRESENT IN DETAIL THE EXACT LOCATION, TYPE OF COMPONENT NOR MANNER OF CONSTRUCTION. THE ENGINEER WILL NOT BE RESPONSIBLE FOR ANY ERRORS OR OMISSIONS WHICH HAVE BEEN INCORPORATED INTO THE RECORD DRAWINGS.

CH2M HILL

DSGN	D WALTERS
DR	KL MCCOY
CHK	E SEEGMUELLER
APVD	RM BRACKEN

NO.	DATE	REVISION	BY	APVD
3	7/93	RECORD DRAWING	BAY	RMB
2	2/93	CL-T-286		
1	10/92	CL-T-257		
	6/91	CL-T-61		

REUSE OF DOCUMENTS
THIS DOCUMENT, AND THE IDEAS AND DESIGNS INCORPORATED HEREIN, AS AN INSTRUMENT OF PROFESSIONAL SERVICE, IS THE PROPERTY OF CH2M HILL AND IS NOT TO BE USED, IN WHOLE OR IN PART, FOR ANY OTHER PROJECT WITHOUT THE WRITTEN AUTHORIZATION OF CH2M HILL.
©CH2M HILL

VERIFY SCALE
BAR IS ONE INCH ON ORIGINAL DRAWING.
0 1"
IF NOT ONE INCH ON THIS SHEET, ADJUST SCALES ACCORDINGLY.

ROCK CREEK
ADVANCED WASTE TREATMENT PLANT
UNIFIED SEWERAGE AGENCY
WASHINGTON COUNTY, OREGON

TERTIARY COMPLEX
MECHANICAL
GROUND LEVEL PLAN E

SHEET	154
DWG NO.	4E-M-10
DATE	NOV 1990
PROJ NO.	PDX21262.M1

DATE: 30/OCT/90 VERSION NO. 10
DGN NAME: I:/P21262/M1/MECH/RC4FM100.DGN

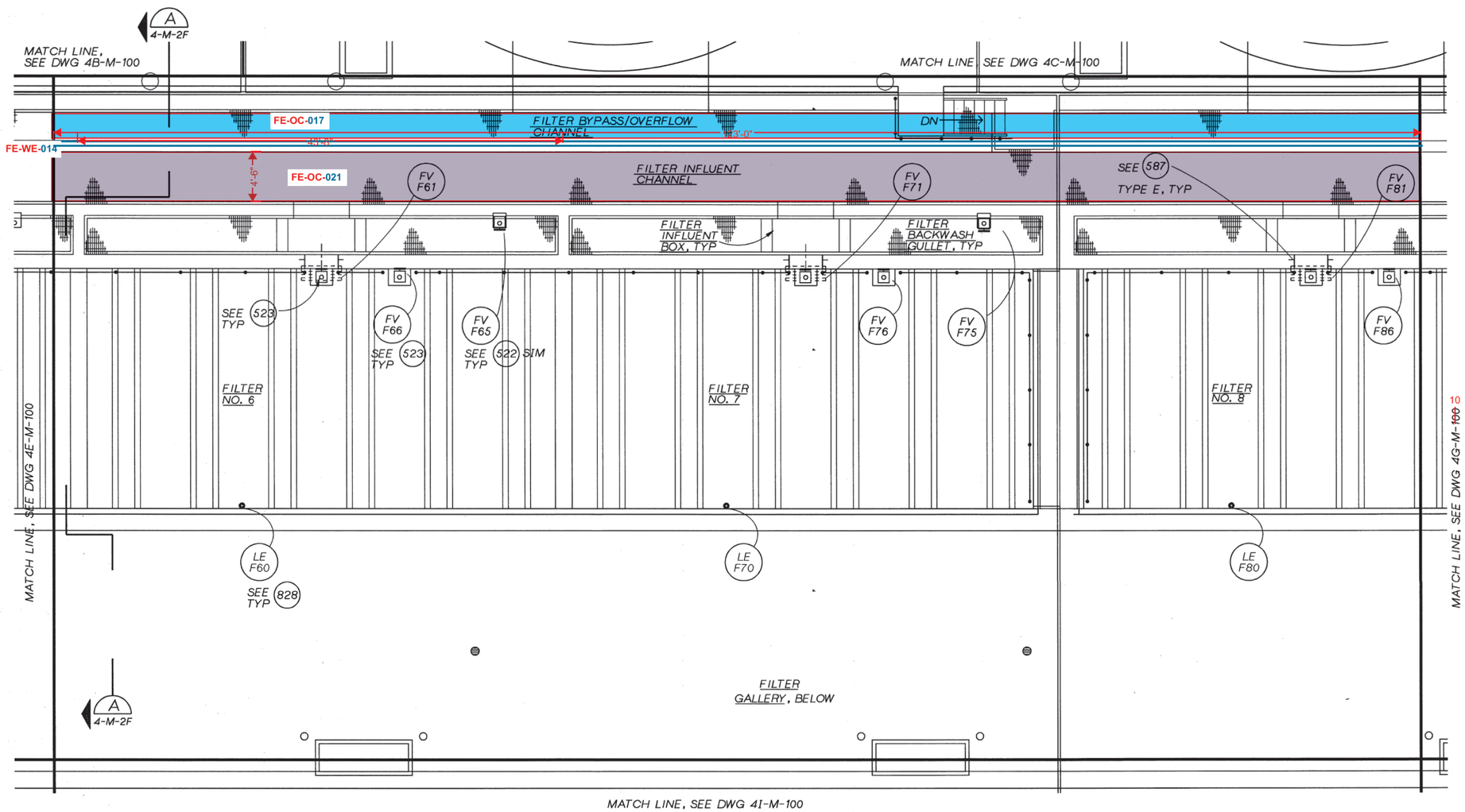

GROUND FLOOR PLAN

3/16"=1'-0"

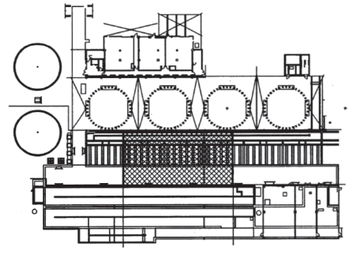

RECORD DRAWINGS

REVISIONS DRAWN BY BAY **DATE** 7/1993

THESE RECORD DRAWINGS HAVE BEEN PREPARED, IN PART, ON THE BASIS OF INFORMATION COMPILED BY OTHERS. THEY ARE NOT INTENDED TO REPRESENT IN DETAIL THE EXACT LOCATION, TYPE OF COMPONENT NOR MANNER OF CONSTRUCTION. THE ENGINEER WILL NOT BE RESPONSIBLE FOR ANY ERRORS OR OMISSIONS WHICH HAVE BEEN INCORPORATED INTO THE RECORD DRAWINGS.

DSGN	D WALTERS
DR	KL MCCOY
CHK	E SEEGMUELLER
APVD	RM BRACKEN

NO.	DATE	REVISION	BY	APVD
-	7/93	RECORD DRAWING	BAY	RMB

REUSE OF DOCUMENTS
THIS DOCUMENT, AND THE IDEAS AND DESIGNS INCORPORATED HEREIN, AS AN INSTRUMENT OF PROFESSIONAL SERVICE, IS THE PROPERTY OF CH2M HILL AND IS NOT TO BE USED, IN WHOLE OR IN PART, FOR ANY OTHER PROJECT WITHOUT THE WRITTEN AUTHORIZATION OF CH2M HILL.
©CH2M HILL

VERIFY SCALE
BAR IS ONE INCH ON ORIGINAL DRAWING.
0 1"
IF NOT ONE INCH ON THIS SHEET, ADJUST SCALES ACCORDINGLY.

ROCK CREEK
ADVANCED WASTE TREATMENT PLANT
UNIFIED SEWERAGE AGENCY
WASHINGTON COUNTY, OREGON

TERTIARY COMPLEX
MECHANICAL

GROUND LEVEL
PLAN F

SHEET	155
DWG NO.	4F-M-10
DATE	NOV 1990
PROJ NO.	PDX21262.M1

DATE: 31/OCT/90 VERSION NO.13
DGN NAME: I:/P21262/M1/MECH/RC4GM100.DGN

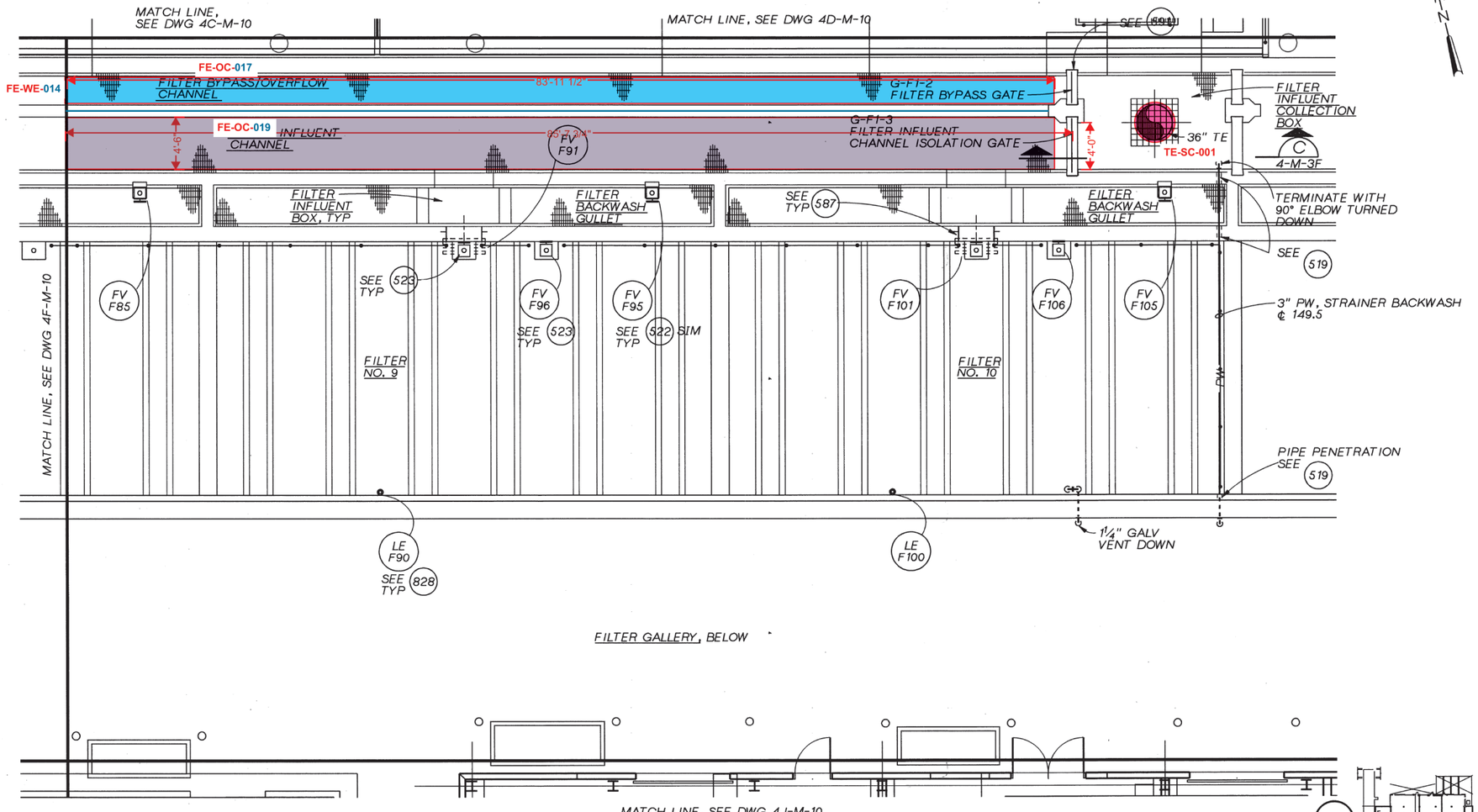

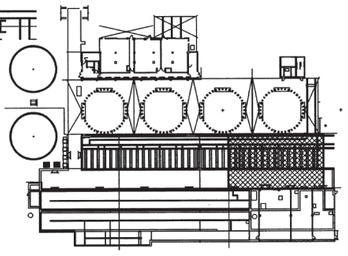

GROUND LEVEL PLAN

3/16 "=1'-0"

RECORD DRAWINGS
REVISIONS DRAWN BY BAY **DATE** 7/1993

THESE RECORD DRAWINGS HAVE BEEN PREPARED, IN PART, ON THE BASIS OF INFORMATION COMPILED BY OTHERS. THEY ARE NOT INTENDED TO REPRESENT IN DETAIL THE EXACT LOCATION, TYPE OF COMPONENT NOR MANNER OF CONSTRUCTION. THE ENGINEER WILL NOT BE RESPONSIBLE FOR ANY ERRORS OR OMISSIONS WHICH HAVE BEEN INCORPORATED INTO THE RECORD DRAWINGS.

CH2M HILL

DSGN	D WALTERS
DR	KL MCCOY
CHK	E SEEGMUELLER
APVD	RM BRACKEN

NO.	DATE	REVISION	BY	APVD
-	7/93	RECORD DRAWING	BAY	RMB

REUSE OF DOCUMENTS
THIS DOCUMENT, AND THE IDEAS AND DESIGNS INCORPORATED HEREIN, AS AN INSTRUMENT OF PROFESSIONAL SERVICE, IS THE PROPERTY OF CH2M HILL AND IS NOT TO BE USED, IN WHOLE OR IN PART, FOR ANY OTHER PROJECT WITHOUT THE WRITTEN AUTHORIZATION OF CH2M HILL.
©CH2M HILL

VERIFY SCALE
BAR IS ONE INCH ON ORIGINAL DRAWING.
0 1"
IF NOT ONE INCH ON THIS SHEET, ADJUST SCALES ACCORDINGLY.

ROCK CREEK
ADVANCED WASTE TREATMENT PLANT
UNIFIED SEWERAGE AGENCY
WASHINGTON COUNTY, OREGON

TERTIARY COMPLEX
MECHANICAL
GROUND LEVEL PLAN G

SHEET	156
DWG NO.	4G-M-10
DATE	NOV 1990
PROJ NO.	PDX21262.M1

Rock Creek Filtration Design Intent

The filtration process is designed to remove suspended solids from the wastewater following either secondary or tertiary treatment to reliably meet plant permit requirements. The filters are designed to meet the dry season total mass discharge limit (TMDL) for phosphorus and suspended solids and the wet season TMDL for suspended solids. In addition, the filters provide a barrier to prevent most of the solids from being discharged during a secondary or tertiary treatment process upset.

Filters 1-4 (west)

Filters 5-10 were constructed in 1992 and removed from service around 2015. Filters 11-14 were constructed in 2005. The filters are configured as mono-media down flow gravity filters with backwash including air scour. The filters are operated as constant level filters.

SCADA Manual

SCADA manual mode in most control scenarios around the Rock Creek Facility allows operators to manually control equipment from SCADA that normally may be controlled via a sequence in SCADA Auto. In the case of the filters SCADA manual controls are not provided, and therefore, the only way to manually control the filter equipment is via hard manual. In SCADA control, the only way to go through a backwash sequence is through the PLC controlled sequence.

SCADA Auto

Each filter has an Online and Offline status associated with it, controllable by the operator. When a filter is offline, all valves are closed, prohibiting the filter from receiving any water, or draining any water. When online, the filter is capable of receiving influent and if necessary, backwashing via the backwash sequence.

The level control valve associated with each filter will modulate as necessary in order to maintain a constant filter level. These valves are controlled by individual level controllers. When the controller is in Manual, the level control valve position is manually entered by the operator. When the controller is in Auto, the controller will modulate the valve position in order to maintain the operator entered set point.

There are three different modes and three different criteria selections available for backwashing the filters. The backwash modes are selectable via a hand switch on the tertiary complex control panel LP-T1. The mode selected from his hand switch will be applied to filters 5-14. the available modes are:

> **Manual:** All equipment associated with a filter backwash is controlled by the operator in hard manual. No automatic starting of the backwash sequence is available. For filters 11-14 only, when any of the valves associated with a filter is in Field, the backwash sequence for that filter is

TE EAST TERTIARY TREATMENT

DATE: 6/30/93 VERSION NO. 8
DGN NAME: M2/MECH/RC4M03F.DGN

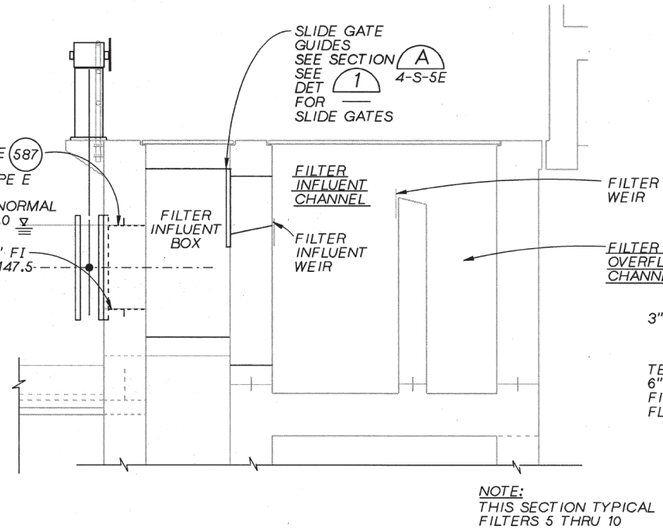

SECTION A
3/8"=1'-0" 4E-M-10

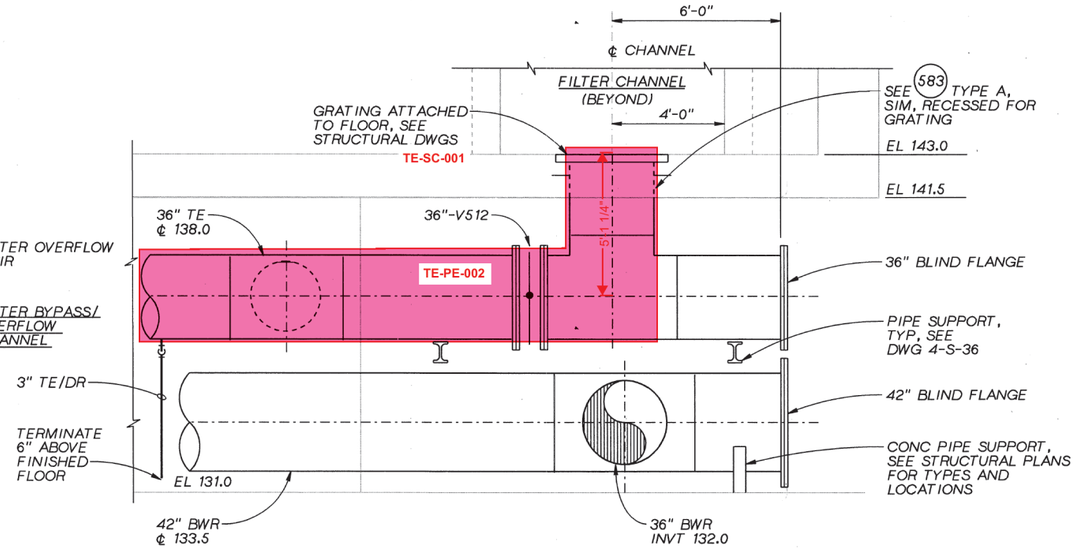

SECTION C
3/8" = 1'-0" 4G-M-0 4G-M-10

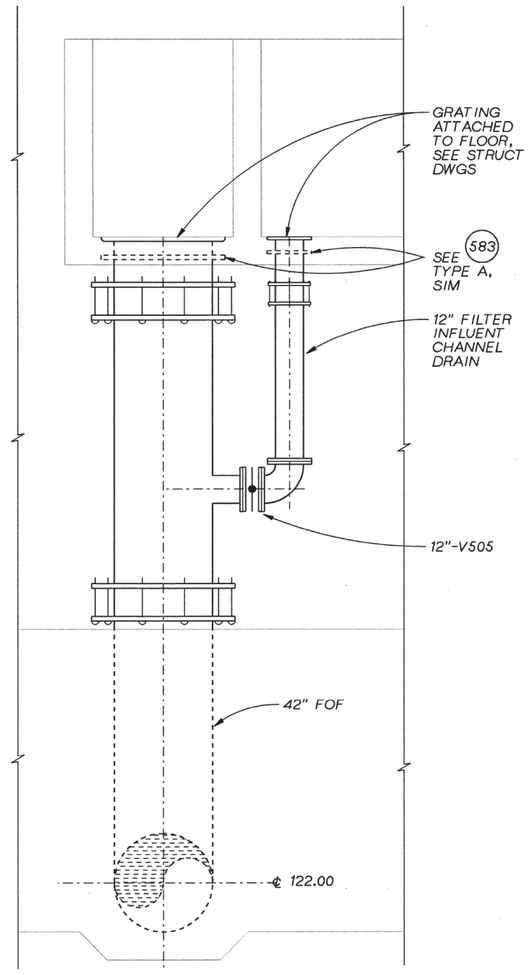

SECTION D
NTS 4E-M-0 4E-M-10

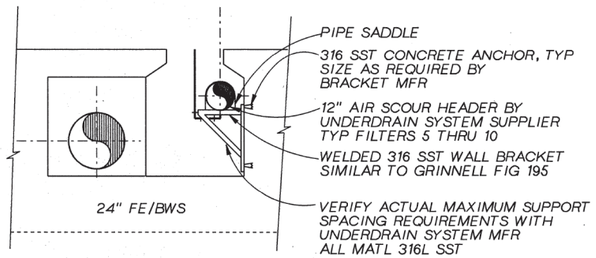

SECTION B
3/8" = 1'-0" 4E-M-0

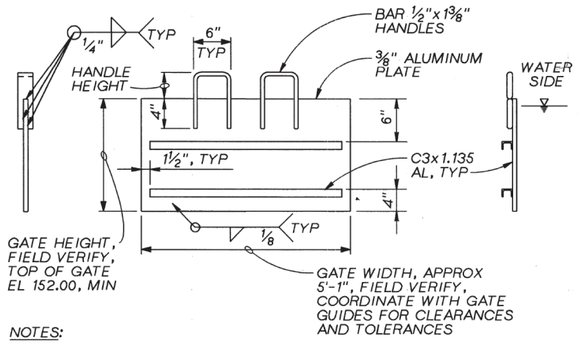

NOTES:
1. LOCATE HANDLES AT THIRD POINTS.
2. ALL GATES TO BE ALUMINUM AS SPECIFIED.
3. PROVIDE THREE GATES, TOTAL.

SLIDE GATE DETAIL 1
NTS

RECORD DRAWINGS
REVISIONS DRAWN BY BAY **DATE** 7/1993

THESE RECORD DRAWINGS HAVE BEEN PREPARED, IN PART, ON THE BASIS OF INFORMATION COMPILED BY OTHERS. THEY ARE NOT INTENDED TO REPRESENT IN DETAIL THE EXACT LOCATION, TYPE OF COMPONENT NOR MANNER OF CONSTRUCTION. THE ENGINEER WILL NOT BE RESPONSIBLE FOR ANY ERRORS OR OMISSIONS WHICH HAVE BEEN INCORPORATED INTO THE RECORD DRAWINGS.

DSGN	D WALTERS/B SNYDER					
DR	RC4M03F.DGN D MCPHERSON					
CHK	E SEEGMUELLER	–	7/93	RECORD DRAWING	BAY	RMB
APVD	RM BRACKEN	NO.	DATE	REVISION	BY	APVD

REUSE OF DOCUMENTS
THIS DOCUMENT, AND THE IDEAS AND DESIGNS INCORPORATED HEREIN, AS AN INSTRUMENT OF PROFESSIONAL SERVICE, IS THE PROPERTY OF CH2M HILL AND IS NOT TO BE USED, IN WHOLE OR IN PART, FOR ANY OTHER PROJECT WITHOUT THE WRITTEN AUTHORIZATION OF CH2M HILL.
©CH2M HILL

VERIFY SCALE
BAR IS ONE INCH ON ORIGINAL DRAWING.
0 1"
IF NOT ONE INCH ON THIS SHEET, ADJUST SCALES ACCORDINGLY.

ROCK CREEK
ADVANCED WASTE TREATMENT PLANT
UNIFIED SEWERAGE AGENCY
WASHINGTON COUNTY, OREGON

TERTIARY COMPLEX
MECHANICAL

FILTER SECTIONS AND DETAILS

SHEET	179
DWG NO.	4-M-3F
DATE	NOV 1990
PROJ NO.	PDX21262.M1

DATE: 1-7-93 VERSION NO. 17
DGN NAME:M2/MECH/RC4GM000.DGN

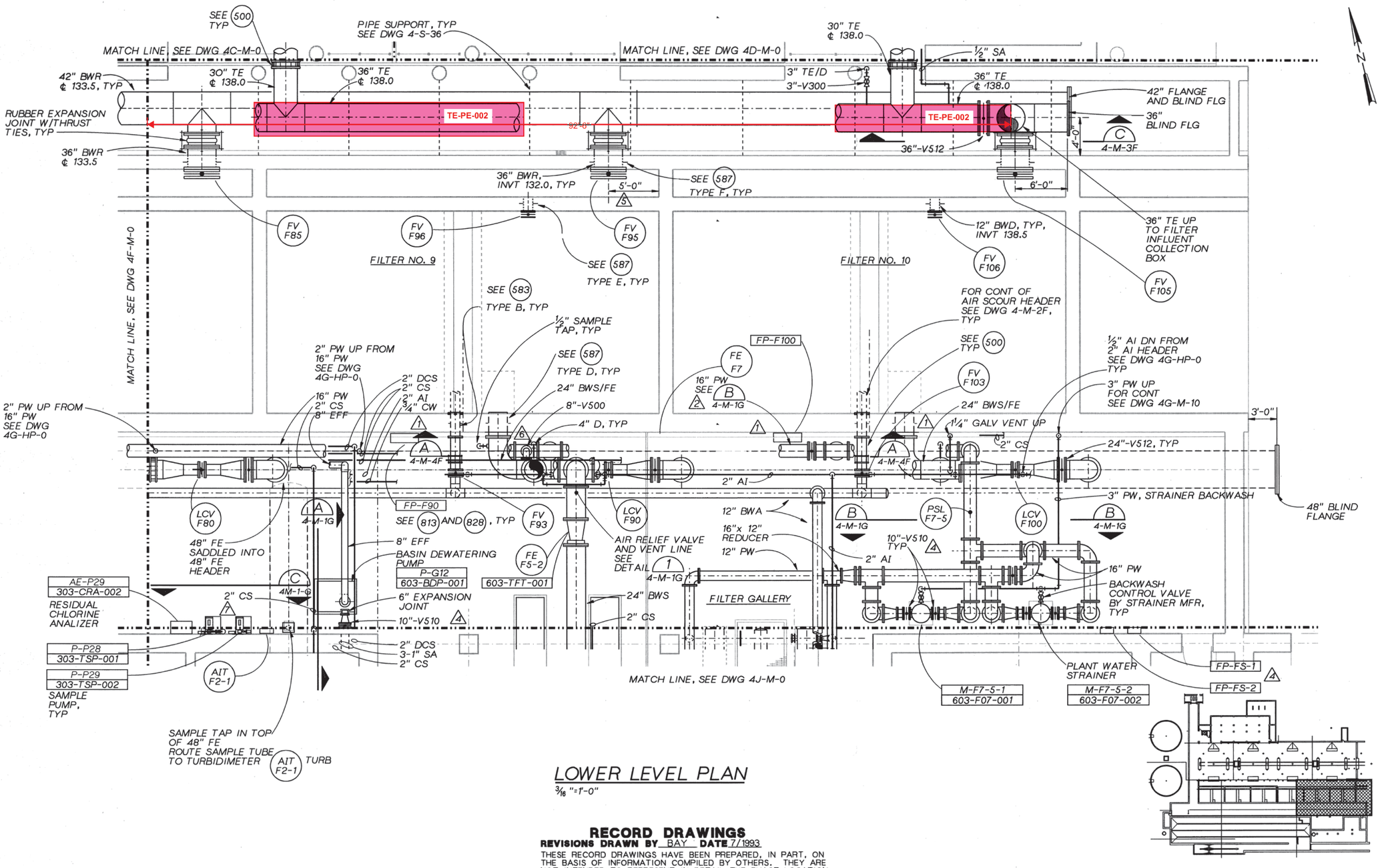

LOWER LEVEL PLAN

3/16 "=1'-0"

RECORD DRAWINGS

REVISIONS DRAWN BY BAY **DATE** 7/1993

THESE RECORD DRAWINGS HAVE BEEN PREPARED, IN PART, ON THE BASIS OF INFORMATION COMPILED BY OTHERS. THEY ARE NOT INTENDED TO REPRESENT IN DETAIL THE EXACT LOCATION, TYPE OF COMPONENT NOR MANNER OF CONSTRUCTION. THE ENGINEER WILL NOT BE RESPONSIBLE FOR ANY ERRORS OR OMISSIONS WHICH HAVE BEEN INCORPORATED INTO THE RECORD DRAWINGS.

NO.	DATE	REVISION	BY	APVD
–	7/93	RECORD DRAWING	BAY	RMB
7	1/93	CL-T-281		
6	8/91	CL-T-92		
5	3/91	CL-T-5		
4	12/90	ADDENDUM NO. 3		
2	1/92	CL-T-173		
1	1/91	ADDENDUM NO. 4	WJS	RMB

CH2MHILL

DSGN JD HAYES / B SNYDER/D WALTERS
DR D MCPHERSON
CHK E SEEGMUELLER
APVD RM BRACKEN

REUSE OF DOCUMENTS
THIS DOCUMENT, AND THE IDEAS AND DESIGNS INCORPORATED HEREIN, AS AN INSTRUMENT OF PROFESSIONAL SERVICE, IS THE PROPERTY OF CH2M HILL AND IS NOT TO BE USED, IN WHOLE OR IN PART, FOR ANY OTHER PROJECT WITHOUT THE WRITTEN AUTHORIZATION OF CH2M HILL.
©CH2M HILL

VERIFY SCALE
BAR IS ONE INCH ON ORIGINAL DRAWING.
0 1"
IF NOT ONE INCH ON THIS SHEET, ADJUST SCALES ACCORDINGLY.

ROCK CREEK
ADVANCED WASTE TREATMENT PLANT
UNIFIED SEWERAGE AGENCY
WASHINGTON COUNTY, OREGON

TERTIARY COMPLEX
MECHANICAL
LOWER LEVEL
PLAN G

SHEET 146
DWG NO. 4G-M-0
DATE NOV 1990
PROJ NO. PDX21262.M1

DATE: 7-1-93 VERSION NO.16
DGN NAME:M2/MECH/RC4FM000.DGN

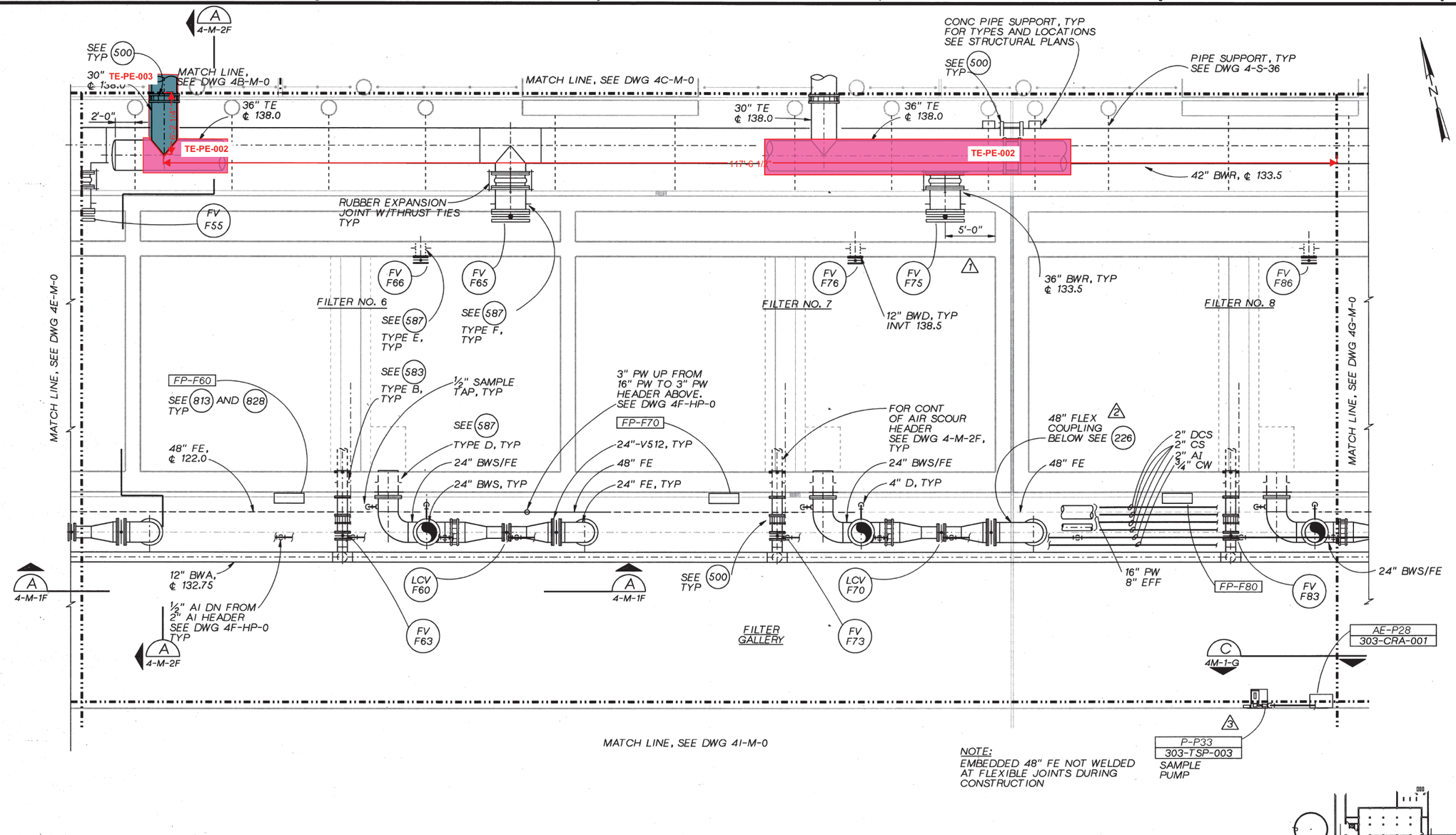

NOTE:
EMBEDDED 48" FE NOT WELDED AT FLEXIBLE JOINTS DURING CONSTRUCTION

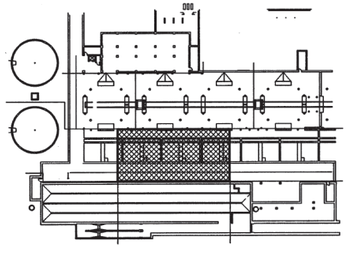

LOWER LEVEL PLAN

3/16 "=1'-0"

RECORD DRAWINGS

REVISIONS DRAWN BY BAY **DATE** 7/1993

THESE RECORD DRAWINGS HAVE BEEN PREPARED, IN PART, ON THE BASIS OF INFORMATION COMPILED BY OTHERS. THEY ARE NOT INTENDED TO REPRESENT IN DETAIL THE EXACT LOCATION, TYPE OF COMPONENT NOR MANNER OF CONSTRUCTION. THE ENGINEER WILL NOT BE RESPONSIBLE FOR ANY ERRORS OR OMISSIONS WHICH HAVE BEEN INCORPORATED INTO THE RECORD DRAWINGS.

CH2M HILL

DSGN	B SNYDER/D WALTERS
DR	D MCPHERSON
CHK	E SEEGMUELLER
APVD	RM BRACKEN

NO.	DATE	REVISION	BY	RMB
3	7/93	RECORD DRAWING	BAY	
2	1/93	CL-T-281		
1	10/91	CL-T-138		
	3/91	CL-T-5		APVD

REUSE OF DOCUMENTS
THIS DOCUMENT, AND THE IDEAS AND DESIGNS INCORPORATED HEREIN, AS AN INSTRUMENT OF PROFESSIONAL SERVICE, IS THE PROPERTY OF CH2M HILL AND IS NOT TO BE USED, IN WHOLE OR IN PART, FOR ANY OTHER PROJECT WITHOUT THE WRITTEN AUTHORIZATION OF CH2M HILL.
©CH2M HILL

VERIFY SCALE
BAR IS ONE INCH ON ORIGINAL DRAWING.
0 1"
IF NOT ONE INCH ON THIS SHEET, ADJUST SCALES ACCORDINGLY.

ROCK CREEK
ADVANCED WASTE TREATMENT PLANT
UNIFIED SEWERAGE AGENCY
WASHINGTON COUNTY, OREGON

TERTIARY COMPLEX
MECHANICAL
LOWER LEVEL PLAN F

SHEET	145
DWG NO.	4F-M-0
DATE	NOV 1990
PROJ NO.	PDX21262.M1

DATE: 6/29/93 VERSION NO. X
DGN NAME: m2/MECH/RC4M01C.DGN

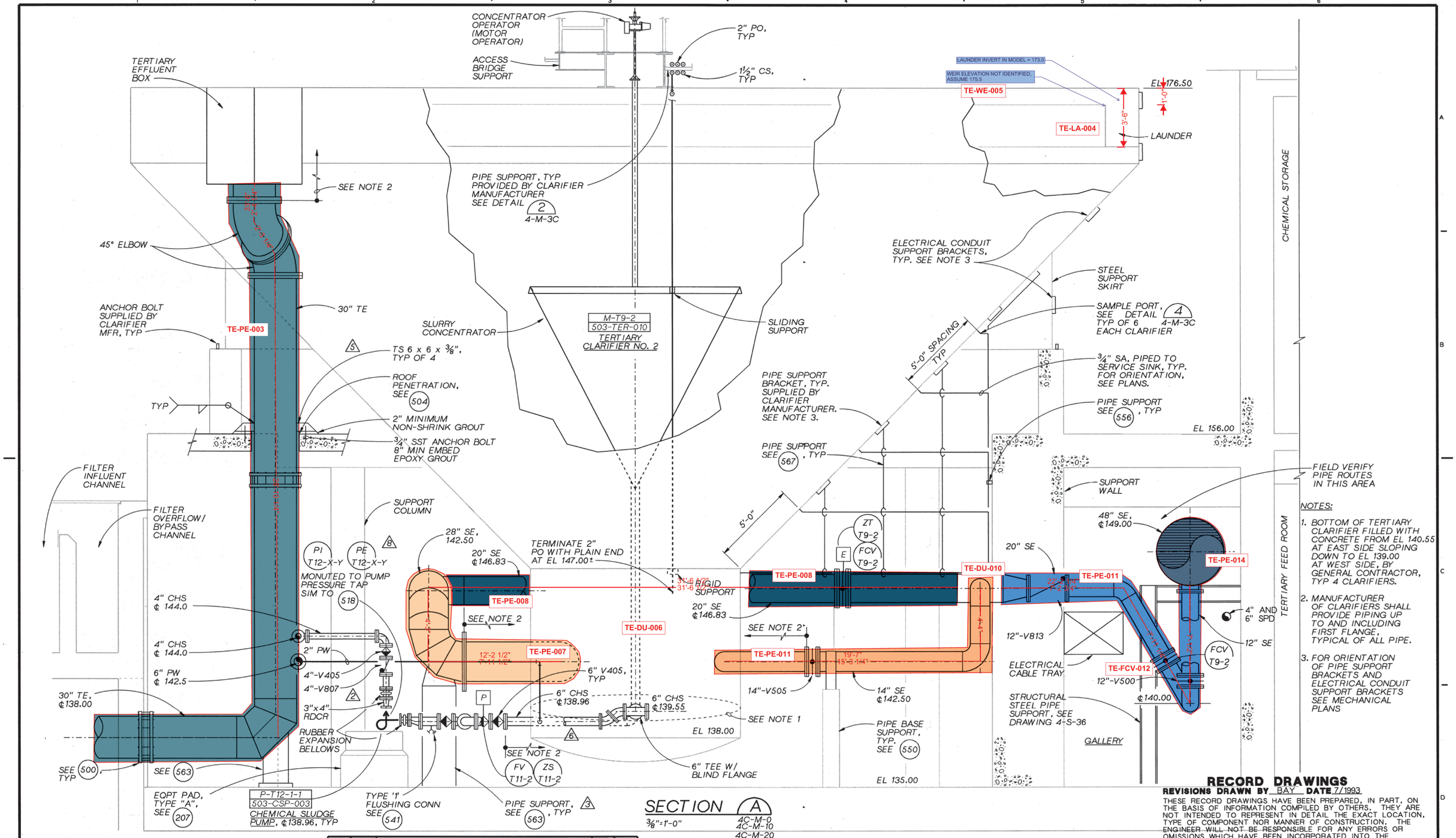

SECTION A

3/8"=1'-0"

4C-M-0
4C-M-10
4C-M-20

NOTES:

1. BOTTOM OF TERTIARY CLARIFIER FILLED WITH CONCRETE FROM EL 140.55 AT EAST SIDE SLOPING DOWN TO EL 139.00 AT WEST SIDE, BY GENERAL CONTRACTOR, TYP 4 CLARIFIERS.
2. MANUFACTURER OF CLARIFIERS SHALL PROVIDE PIPING UP TO AND INCLUDING FIRST FLANGE, TYPICAL OF ALL PIPE.
3. FOR ORIENTATION OF PIPE SUPPORT BRACKETS AND ELECTRICAL CONDUIT SUPPORT BRACKETS SEE MECHANICAL PLANS

RECORD DRAWINGS
REVISIONS DRAWN BY BAY **DATE** 7/1993

THESE RECORD DRAWINGS HAVE BEEN PREPARED, IN PART, ON THE BASIS OF INFORMATION COMPILED BY OTHERS. THEY ARE NOT INTENDED TO REPRESENT IN DETAIL THE EXACT LOCATION, TYPE OF COMPONENT NOR MANNER OF CONSTRUCTION. THE ENGINEER WILL NOT BE RESPONSIBLE FOR ANY ERRORS OR OMISSIONS WHICH HAVE BEEN INCORPORATED INTO THE RECORD DRAWINGS.

NO.	DATE	REVISION	BY	APVD
-	7/93	RECORD DRAWING	BAY	RMB
4	10/91	CL-T-143		
3	5/91	CL-T-62		
2	3/91	CL-T-11		
1	12/90	ADDENDUM NO. 3		
6	2/93	CL-T-302		
5	1/92	CL-T-170		
4	11/91	CL-T-162		
3	11/91	CL-T-156		

CH2M HILL

DSGN B YOUKER
DR KL MCCOY
CHK E SEEGMUELLER
APVD RM BRACKEN

REUSE OF DOCUMENTS
THIS DOCUMENT, AND THE IDEAS AND DESIGNS INCORPORATED HEREIN, AS AN INSTRUMENT OF PROFESSIONAL SERVICE, IS THE PROPERTY OF CH2M HILL AND IS NOT TO BE USED, IN WHOLE OR IN PART, FOR ANY OTHER PROJECT WITHOUT THE WRITTEN AUTHORIZATION OF CH2M HILL.
©CH2M HILL

VERIFY SCALE
BAR IS ONE INCH ON ORIGINAL DRAWING.
0 1"
IF NOT ONE INCH ON THIS SHEET, ADJUST SCALES ACCORDINGLY.

ROCK CREEK
ADVANCED WASTE TREATMENT PLANT
UNIFIED SEWERAGE AGENCY
WASHINGTON COUNTY, OREGON

TERTIARY COMPLEX
MECHANICAL
TERTIARY CLARIFIER SECTION

SHEET 169
DWG NO. 4-M-1C
DATE NOV 1990
PROJ NO. PDX21262.M1

DATE: 10/22/90 VERSION NO. X
DGN NAME: I:/P21262/M1/MECH/RC4BM200.DGN

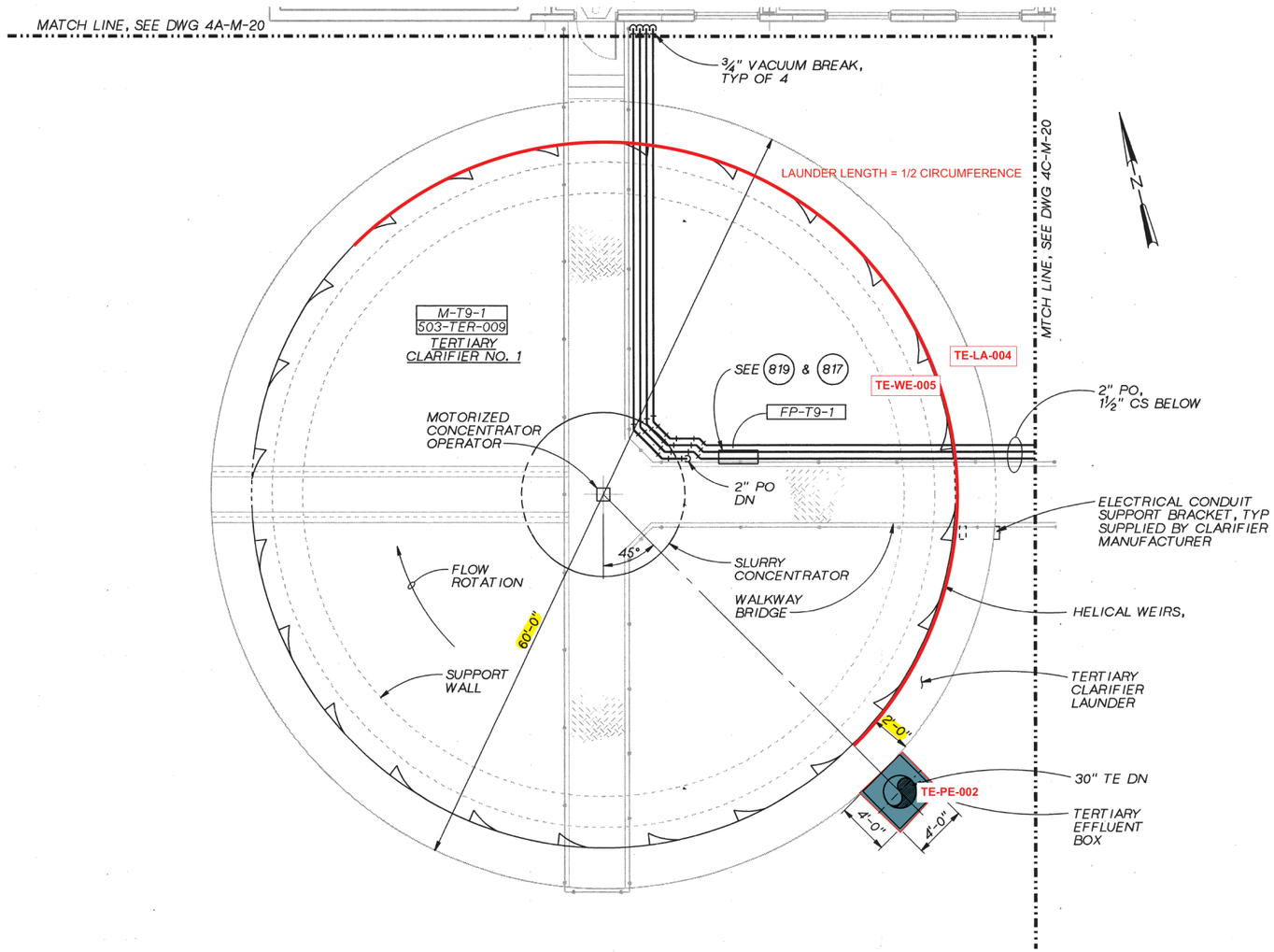

UPPER LEVEL PLAN

3/16 "=1'-0"

RECORD DRAWINGS

REVISIONS DRAWN BY BAY **DATE** 7/1993

THESE RECORD DRAWINGS HAVE BEEN PREPARED, IN PART, ON THE BASIS OF INFORMATION COMPILED BY OTHERS. THEY ARE NOT INTENDED TO REPRESENT IN DETAIL THE EXACT LOCATION, TYPE OF COMPONENT NOR MANNER OF CONSTRUCTION. THE ENGINEER WILL NOT BE RESPONSIBLE FOR ANY ERRORS OR OMISSIONS WHICH HAVE BEEN INCORPORATED INTO THE RECORD DRAWINGS.

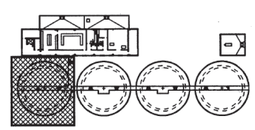

CH2M HILL

DSGN	B YOUKER				
DR	KL MCCOY				
CHK	E SEEGMUELLER				
APVD	RM BRACKEN	–	7/93	RECORD DRAWING	BAY RMB
		NO.	DATE	REVISION	BY APVD

REUSE OF DOCUMENTS
THIS DOCUMENT, AND THE IDEAS AND DESIGNS INCORPORATED HEREIN, AS AN INSTRUMENT OF PROFESSIONAL SERVICE, IS THE PROPERTY OF CH2M HILL AND IS NOT TO BE USED, IN WHOLE OR IN PART, FOR ANY OTHER PROJECT WITHOUT THE WRITTEN AUTHORIZATION OF CH2M HILL.
©CH2M HILL

VERIFY SCALE
BAR IS ONE INCH ON ORIGINAL DRAWING.
0 1"
IF NOT ONE INCH ON THIS SHEET, ADJUST SCALES ACCORDINGLY.

ROCK CREEK
ADVANCED WASTE TREATMENT PLANT
UNIFIED SEWERAGE AGENCY
WASHINGTON COUNTY, OREGON

TERTIARY COMPLEX
MECHANICAL
UPPER LEVEL
PLAN B

SHEET	160
DWG NO.	4B-M-20
DATE	NOV 1990
PROJ NO.	PDX21262.M1

DATE: 10/31/90 VERSION NO. 10
DGN NAME: I:/P21262/M1/MECH/RC4BM000.DGN

14" BWR FOR CONT SEE DWG 1-C-33

BACKWASH SURGE BASIN NO. 3
B-F8-3
603-F08-SB3

SEE (587) TYPE B

SEE (587) TYPE C

SEE (519)

℄ 150.17

SURGE BASIN DISTRIBUTION BOX

G-F8-3

G-F8-4

42" BWR ℄ 127.75

42" BWR ℄126.75

3" NaOCl/DR INVT 143.83

4" SPD

SEE (505)

SEE (587) TYPE C

42" BWR ℄ 127.75

FLANGED COUPLING ADAPTER, TYP OF 2

NOTES:

1. FOR PIPE SUPPORT DETAILS, SEE DWG 4-S-36.
2. GENERAL CONTRACTOR SHALL FILL WITH CONCRETE FILL AFTER CLARIFIER MANUFACTURER HAS INSTALLED CLARIFIER

RECORD DRAWINGS
REVISIONS DRAWN BY BAY **DATE** 7/1993
THESE RECORD DRAWINGS HAVE BEEN PREPARED, IN PART, ON THE BASIS OF INFORMATION COMPILED BY OTHERS. THEY ARE NOT INTENDED TO REPRESENT IN DETAIL THE EXACT LOCATION, TYPE OF COMPONENT NOR MANNER OF CONSTRUCTION. THE ENGINEER WILL NOT BE RESPONSIBLE FOR ANY ERRORS OR OMISSIONS WHICH HAVE BEEN INCORPORATED INTO THE RECORD DRAWINGS.

BACKWASH SURGE BASIN NO. 4
B-F8-4
603-F08-SB4

B 4-M-6E

CONNECTED W/SERVICE SADDLE

SEE ALUM INJECTION DETAIL 1 4-M-3C

2" AL, ℄142.50

3" NaOCL/D

¾" STL V, ℄147.00

2" CS, FOR CONTINUATION, SEE DWG 4A-M-0, TYP

WALL SLEEVE, SEE (509)

FACE OF WALL

4'-6"

MATCH LINE, SEE DWG 4A-M-0

6" SPD

3" NaOCL/D

FCV T8-1 ZT T8-1

IN VERT, SEE SECT B 4-M-2C SIM

24"-V510

AF-PE-020

AF-PE-019

TE-DU-013

TE-PE-014

TE-PE-011

20"-V813

FE T8-1

FIT T8-1 SEE (813)

20"x12" RDCR

16" BWR ℄147.50

3'-8 3/4"

11'-0"

HATCH TE-DU-010

E

20"X20"X14" TEE

ZT T9-1 FCV T9-1

14" SE ℄146.83

14" SE ℄ 142.50

TE-PE-009

20" SE, ℄ 146.83

SEE (562) TYP

14"-V505

16" SE ℄138.00

FE T13

6"CHS, ℄ 139.55

2" THREADED CPLG INSTALLED BY CLARIFIER MFR

6" TEE WITH BLIND FLANGE

M-T9-1 503-TER-009 TERTIARY CLARIFIER NO. 1

139.25

6-¾" SA, DOWN TO SERVICE SINK, TYP SEE DETAIL 3 4-M-3C

FCV T13

℄ TERTIARY CLARIFIER

7'-6"

TE-PE-008

6" CHS

6 V405, TYP

140.25 SEE NOTE 2

TE-DU-006

2" V300, TYP

FV T10-1

ZS T11-1 FV T11-1

24"-V510

FIT T15

SEE (813)

28" SE, ℄142.50

20"x28" RDCR

TE-PE-007

20 SE ℄146.83

6" TEE WITH BLIND FLANGE

6' CHS, ℄ 138.96

2" PW FOR CONT, SEE DWG 4B-HP-0

6" CHS, ℄143.00

P-T12-1-1 503-CSP-001 CHEMICAL SLUDGE PUMP

6" V405, TYP

4" CHS

4" CHS, ℄ 144.0

4" x 3" RDCR

3" CHS 8'-0"

FE T15

TE-PE-003

FLEX CPLG IN VERT, SEE SECT A 4-M-1C

MATCH LINE, SEE DWG 4E-M-0

1½" CS, FOR CONT UP, SEE DWG 4B-M-10

A 4-M-2C

TE-PE-014

SEE (500) TYP

48" SE, ℄149.00

PIPE SUPPORT, TYP, SEE NOTE 1

MATCH LINE, SEE DWG 4C-M-0

B 4-M-6E

LOWER LEVEL PLAN

3/16" = 1'-0"

NO.	DATE	REVISION	BY	APVD
-	7/93	RECORD DRAWING	BAY	RMB
5	2/93	CLT-292		
3	10/91	CLT-143		
2	5/91	CLT-60		
1	1/92	CLT-173		

DSGN B YOUKER
B SNYDER/D WALTERS
DR KJ RITTER
CHK E SEEGMUELLER
APVD RM BRACKEN

CH2M HILL

REUSE OF DOCUMENTS
THIS DOCUMENT, AND THE IDEAS AND DESIGNS INCORPORATED HEREIN, AS AN INSTRUMENT OF PROFESSIONAL SERVICE, IS THE PROPERTY OF CH2M HILL AND IS NOT TO BE USED, IN WHOLE OR IN PART, FOR ANY OTHER PROJECT WITHOUT THE WRITTEN AUTHORIZATION OF CH2M HILL.
©CH2M HILL

VERIFY SCALE
BAR IS ONE INCH ON ORIGINAL DRAWING.
0 1"
IF NOT ONE INCH ON THIS SHEET, ADJUST SCALES ACCORDINGLY.

ROCK CREEK
ADVANCED WASTE TREATMENT PLANT
UNIFIED SEWERAGE AGENCY
WASHINGTON COUNTY, OREGON

TERTIARY COMPLEX
MECHANICAL
LOWER LEVEL
PLAN B

SHEET 141
DWG NO. 4B-M-0
DATE NOV 1990
PROJ NO. PDX21262.M1

DATE: 6/25/93 VERSION NO. X
DGN NAME: M2/MECH/RC4CM000.DGN

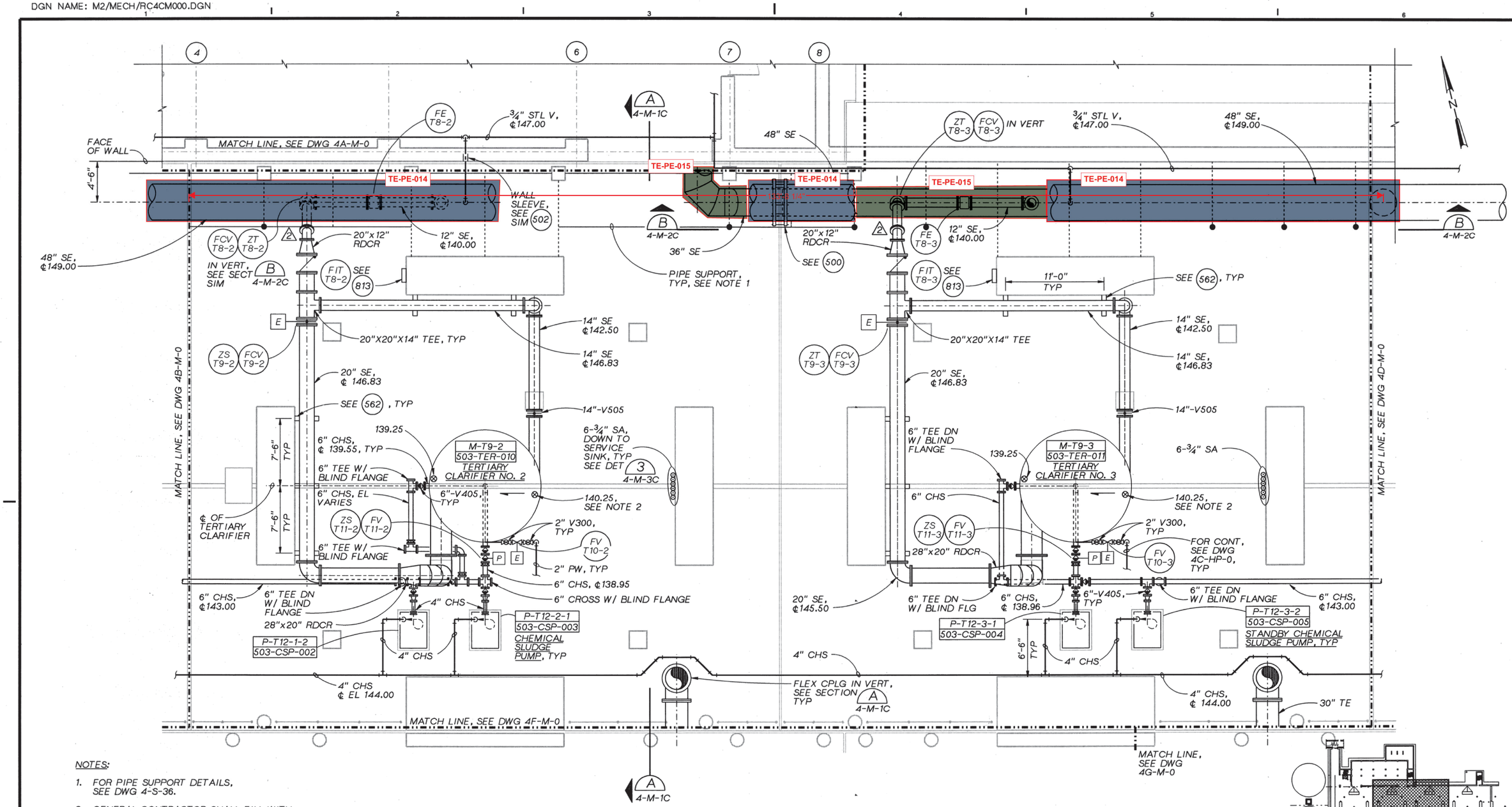

NOTES:

1. FOR PIPE SUPPORT DETAILS, SEE DWG 4-S-36.
2. GENERAL CONTRACTOR SHALL FILL WITH CONCRETE FILL AFTER CLARIFIER MANUFACTURER HAS INSTALLED CLARIFIER, TYP.

LOWER LEVEL PLAN

3/16 "=1'-0"

RECORD DRAWINGS

REVISIONS DRAWN BY BAY **DATE** 7/1993

THESE RECORD DRAWINGS HAVE BEEN PREPARED, IN PART, ON THE BASIS OF INFORMATION COMPILED BY OTHERS. THEY ARE NOT INTENDED TO REPRESENT IN DETAIL THE EXACT LOCATION, TYPE OF COMPONENT NOR MANNER OF CONSTRUCTION. THE ENGINEER WILL NOT BE RESPONSIBLE FOR ANY ERRORS OR OMISSIONS WHICH HAVE BEEN INCORPORATED INTO THE RECORD DRAWINGS.

CH2MHILL

DSGN	B YOUKER	–	7/93	RECORD DRAWING	BAY RMB
DR	KL MCCOY	2	10/91	CL-T-193	
CHK	E SEEGMUELLER	1	12/90	ADDENDUM NO. 3	
APVD	RM BRACKEN	NO.	DATE	REVISION	BY APVD

REUSE OF DOCUMENTS
THIS DOCUMENT, AND THE IDEAS AND DESIGNS INCORPORATED HEREIN, AS AN INSTRUMENT OF PROFESSIONAL SERVICE, IS THE PROPERTY OF CH2M HILL AND IS NOT TO BE USED, IN WHOLE OR IN PART, FOR ANY OTHER PROJECT WITHOUT THE WRITTEN AUTHORIZATION OF CH2M HILL.
©CH2M HILL

VERIFY SCALE
BAR IS ONE INCH ON ORIGINAL DRAWING.
0 1"
IF NOT ONE INCH ON THIS SHEET, ADJUST SCALES ACCORDINGLY.

ROCK CREEK
ADVANCED WASTE TREATMENT PLANT
UNIFIED SEWERAGE AGENCY
WASHINGTON COUNTY, OREGON

TERTIARY COMPLEX
MECHANICAL
LOWER LEVEL
PLAN C

SHEET 142
DWG NO. 4C-M-0
DATE NOV 1990
PROJ NO. PDX21262.M1

DATE: 6/29/93 VERSION NO. X
M2/MECH/RC4M02C.DGN

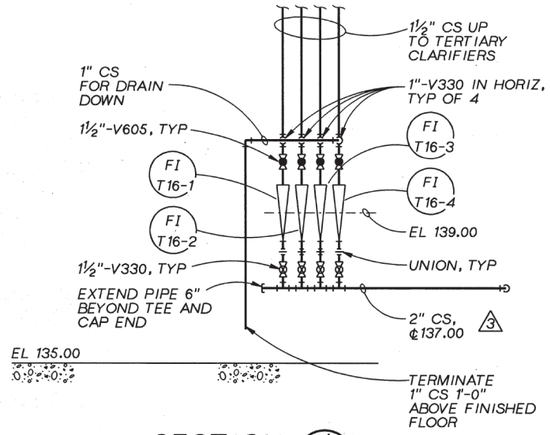

SECTION A
½"=1'-0" 4B-M-0

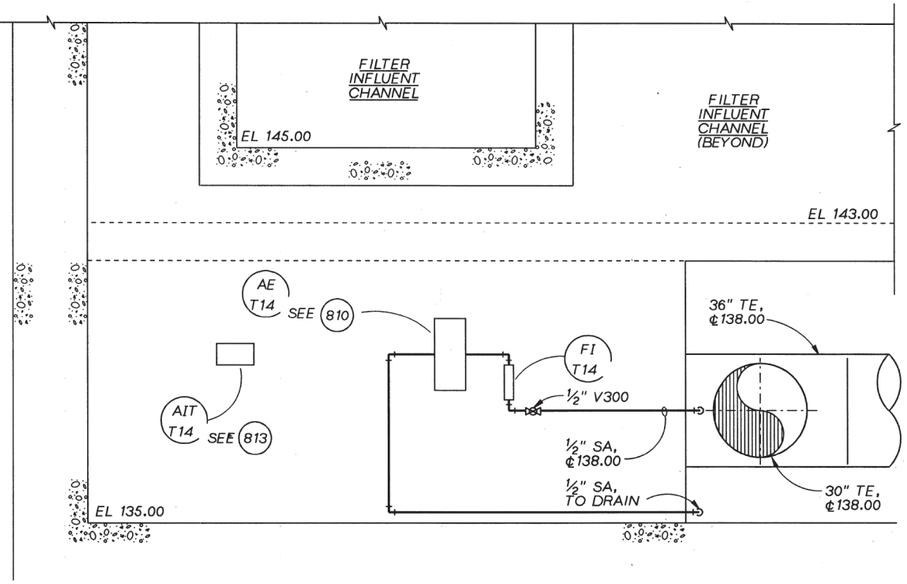

SECTION C
½"=1'-0" 4D-M-0

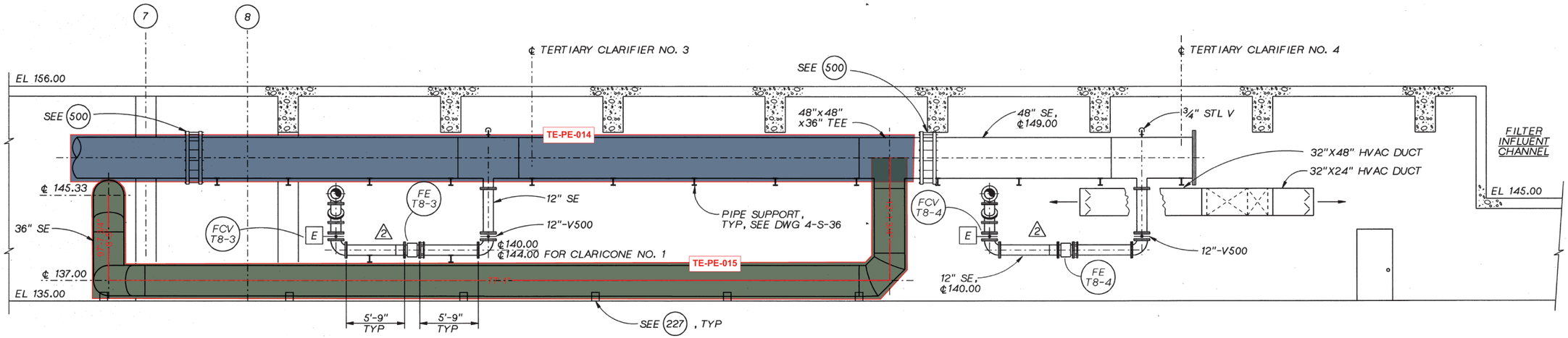

NOTE:
FOR HVAC DUCT PLAN, SEE DWG 4D-HP-0.

SECTION B
3/16"=1'-0" 4C-M-0 4D-M-0

RECORD DRAWINGS
REVISIONS DRAWN BY BAY **DATE** 7/1993

THESE RECORD DRAWINGS HAVE BEEN PREPARED, IN PART, ON THE BASIS OF INFORMATION COMPILED BY OTHERS. THEY ARE NOT INTENDED TO REPRESENT IN DETAIL THE EXACT LOCATION, TYPE OF COMPONENT NOR MANNER OF CONSTRUCTION. THE ENGINEER WILL NOT BE RESPONSIBLE FOR ANY ERRORS OR OMISSIONS WHICH HAVE BEEN INCORPORATED INTO THE RECORD DRAWINGS.

NO.	DATE	REVISION	BY	APVD
–	7/93	RECORD DRAWING	BAY	RMB
3	3/93	CL-T-301		
2	5/92	CL-T-204		
1	12/90	ADDENDUM NO. 3		

DSGN B YOUKER
DR RC4M02C D McPHERSON
CHK E SEEGMUELLER
APVD RM BRACKEN

REUSE OF DOCUMENTS
THIS DOCUMENT, AND THE IDEAS AND DESIGNS INCORPORATED HEREIN, AS AN INSTRUMENT OF PROFESSIONAL SERVICE, IS THE PROPERTY OF CH2M HILL AND IS NOT TO BE USED, IN WHOLE OR IN PART, FOR ANY OTHER PROJECT WITHOUT THE WRITTEN AUTHORIZATION OF CH2M HILL.
©CH2M HILL

VERIFY SCALE
BAR IS ONE INCH ON ORIGINAL DRAWING.
0 1"
IF NOT ONE INCH ON THIS SHEET, ADJUST SCALES ACCORDINGLY.

ROCK CREEK
ADVANCED WASTE TREATMENT PLANT
UNIFIED SEWERAGE AGENCY
WASHINGTON COUNTY, OREGON

TERTIARY COMPLEX
MECHANICAL
TERTIARY CLARIFIER SECTION

SHEET 170
DWG NO. 4-M-2C
DATE NOV 1990
PROJ NO. PDX21262.M1

DATE: 6/25/93 VERSION NO. 18
DGN NAME: M2/MECH/RC4AM000.DGN

FOR CONTINUATION SEE DWG 5-G-17

2" AL
10" PW
2" AI
4" CW
4" CHS
16" BWR

2" NaOCl
2" CS
2" CS

T-T19
603-ADT-001
ALUM DAY TANK

LE T19 SEE 800

LSHH T19 SEE 804

CALIBRATION COLUMN

SEE ISOMETRIC DETAIL C 4-M-1A

MECHANICAL PIPING MODIFIED IN THIS AREA. SEE FIELD CONDITIONS

P-T20-1 603-N11-004

P-T20-2 603-N11-005

P-T20-3 603-N11-006
ALUM FEED PUMP, TYP

3" NaOCl/D FOR CONT SEE DWG 4-M-2A

3"-V331

SLOPE UNIFORMLY @ 1/4"/FT TO SURGE BASINS

2" AL ℄147.00

2" AL, ℄142.50

3" CW, ℄ 143.5, TYP
6" PW
1" AI
2" AL
2" NaOCl
2-2" CS
2" DCS
3-2" CS

GALLERY

3" CW, 2" AL, ℄ 151.5
6" PW, ℄ 152.5
1" AI, ℄ 152.5

2" NaOCl, ℄ 153.5
2" CS, ℄153.5

6" SPD, ℄ 143.5

3" CW, ℄ 151.5

2" AL, ℄142.0
2" DCS, ℄152.5
2" CS, ℄152.5

FP-T20-1
FP-T20-2
FP-T20-3

LIT T19 SEE 813

2" AL, ℄143.00
2" AL, ℄143.00
2" AL, ℄147.00
2" AL, ℄142.50

¾" STL V, ℄147.00

2" CS, ℄ 137.00, FOR CONT UP, SEE DWG 4-M-2A

NaOCL/D

INVT 146.50

FOR CONT, SEE DWG 4B-M-0

MATCH LINE, SEE DWG 4B-M-0

MATCH LINE, SEE DWG 4C-M-0

WALL SLEEVE, SEE TYP 502 SIM

WALL SLEEVE, SEE TYP 509

42" SE

24"-V510, TYP

24"-V813 TYP

P-T1-1
603-TFP-001
TERTIARY FEED PUMP, TYP

P-T1-2 603-TFP-002

P-T1-3 603-TFP-003

4'-6" 10'-0" 11'-0"

TERMINATE 1" STL V AT EL 153.00 SEE NOTE 1

3'-8"

36" SE

20" SE TYP

FIT T13 SEE 813

SEE NOTE 1

PIPE SUPPORT, TYP

SEE ALUM INJECTOR DETAIL 1 4-M-3C

2" AL, ℄143.00

VALVE OPERATOR & STEM GUIDE, TYP

9" TYP

60"-V511, OPERATOR ROTATED 90°, EXTENDED TO SURFACE

60" SE, INVT 145.00 SEE NOTE 3

ES-PE-002

LE T2 SEE NOTE 2

FP-T2 SEE LIT T2 828

42" SE, INVT 141.00, TYP

BLIND FLG, TYP.

TE-PE-015

CS-T1-1
CS-T1-2
CS-T1-3

WALL PIPE, SEE TYP 505

PEXFLG WALL PIPE, SEE TYP 583

LSL T2 EL 141.00

LSLL T2 EL 140.00 SEE 802

1" STL V, ℄143.00
1"-V300
1"x¾" RDCR, TYP OF 2

9'-0" 8'-0" 7'-0"

RECORD DRAWINGS

REVISIONS DRAWN BY BAY **DATE** 7/1993

THESE RECORD DRAWINGS HAVE BEEN PREPARED, IN PART, ON THE BASIS OF INFORMATION COMPILED BY OTHERS. THEY ARE NOT INTENDED TO REPRESENT IN DETAIL THE EXACT LOCATION, TYPE OF COMPONENT NOR MANNER OF CONSTRUCTION. THE ENGINEER WILL NOT BE RESPONSIBLE FOR ANY ERRORS OR OMISSIONS WHICH HAVE BEEN INCORPORATED INTO THE RECORD DRAWINGS.

NOTES:

1. FOR PIPE SUPPORT DETAILS, SEE DWG 4-S-36.
2. TERMINATE BUBBLER TUBE AT EL 137.00.
3. FOR CONTINUATION, SEE DWG 1-C-33

PLAN A

3/16 "=1'-0"

CH2MHILL

DSGN B A YOUKER
B SNYDER/D WALTERS
DR KL MCCOY
CHK E SEEGMUELLER
APVD RM BRACKEN

NO.	DATE	REVISION	BY	APVD
3	7/93	RECORD DRAWING	BAY	RMB
2	9/91	ADDENDUM NO. 4		
1	12/90	ADDENDUM NO. 3		

REUSE OF DOCUMENTS
THIS DOCUMENT, AND THE IDEAS AND DESIGNS INCORPORATED HEREIN, AS AN INSTRUMENT OF PROFESSIONAL SERVICE, IS THE PROPERTY OF CH2M HILL AND IS NOT TO BE USED, IN WHOLE OR IN PART, FOR ANY OTHER PROJECT WITHOUT THE WRITTEN AUTHORIZATION OF CH2M HILL.
©CH2M HILL

VERIFY SCALE
BAR IS ONE INCH ON ORIGINAL DRAWING.
0 1"
IF NOT ONE INCH ON THIS SHEET, ADJUST SCALES ACCORDINGLY.

ROCK CREEK
ADVANCED WASTE TREATMENT PLANT
UNIFIED SEWERAGE AGENCY
WASHINGTON COUNTY, OREGON

TERTIARY COMPLEX
MECHANICAL
LOWER LEVEL
PLAN A

SHEET 140
DWG NO. 4A-M-0
DATE NOV 1990
PROJ NO. PDX21262.M1

DATE: 06/29/93 VERSION NO. 2
DGN NAME:/M2/MECH/RC4M01A.DGN

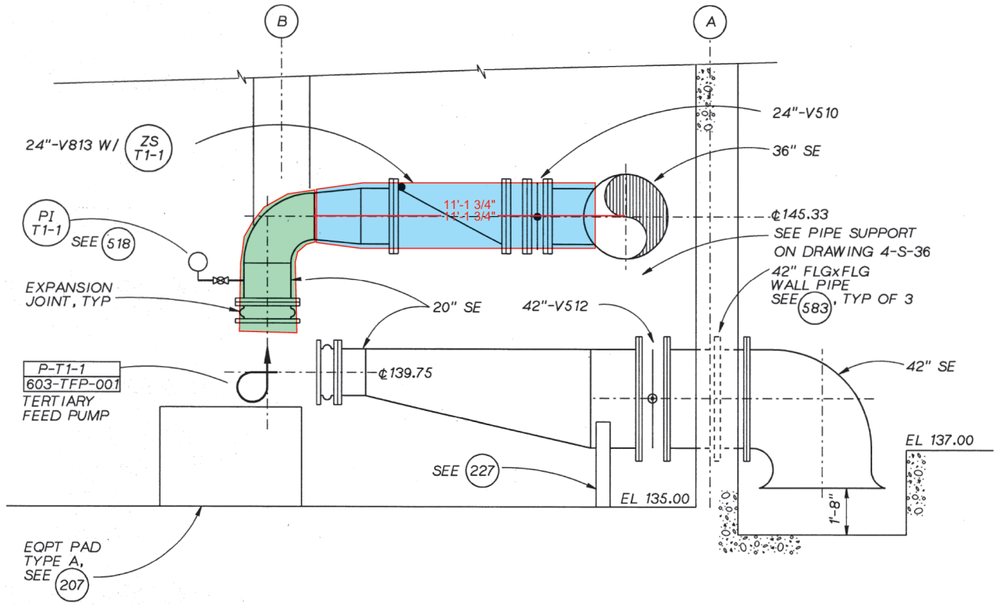

SECTION A
3/8"=1'-0" 4-A-M-0

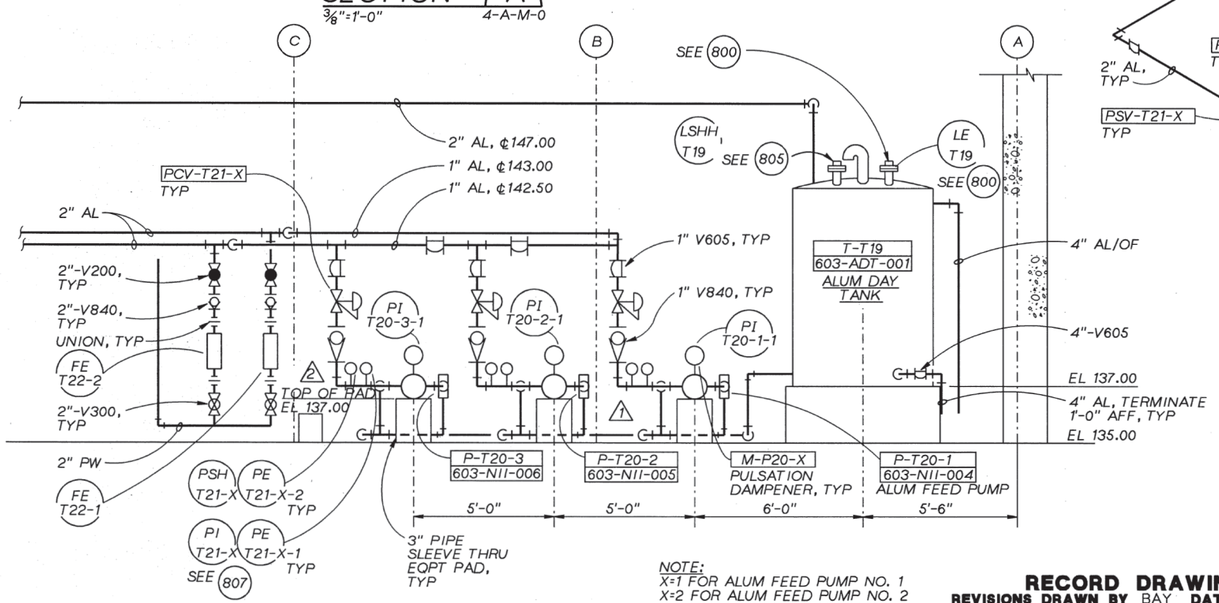

SECTION B
3/8"=1'-0" 4A-M-0

NOTE:
X=1 FOR ALUM FEED PUMP NO. 1
X=2 FOR ALUM FEED PUMP NO. 2
X=3 FOR ALUM FEED PUMP NO. 3

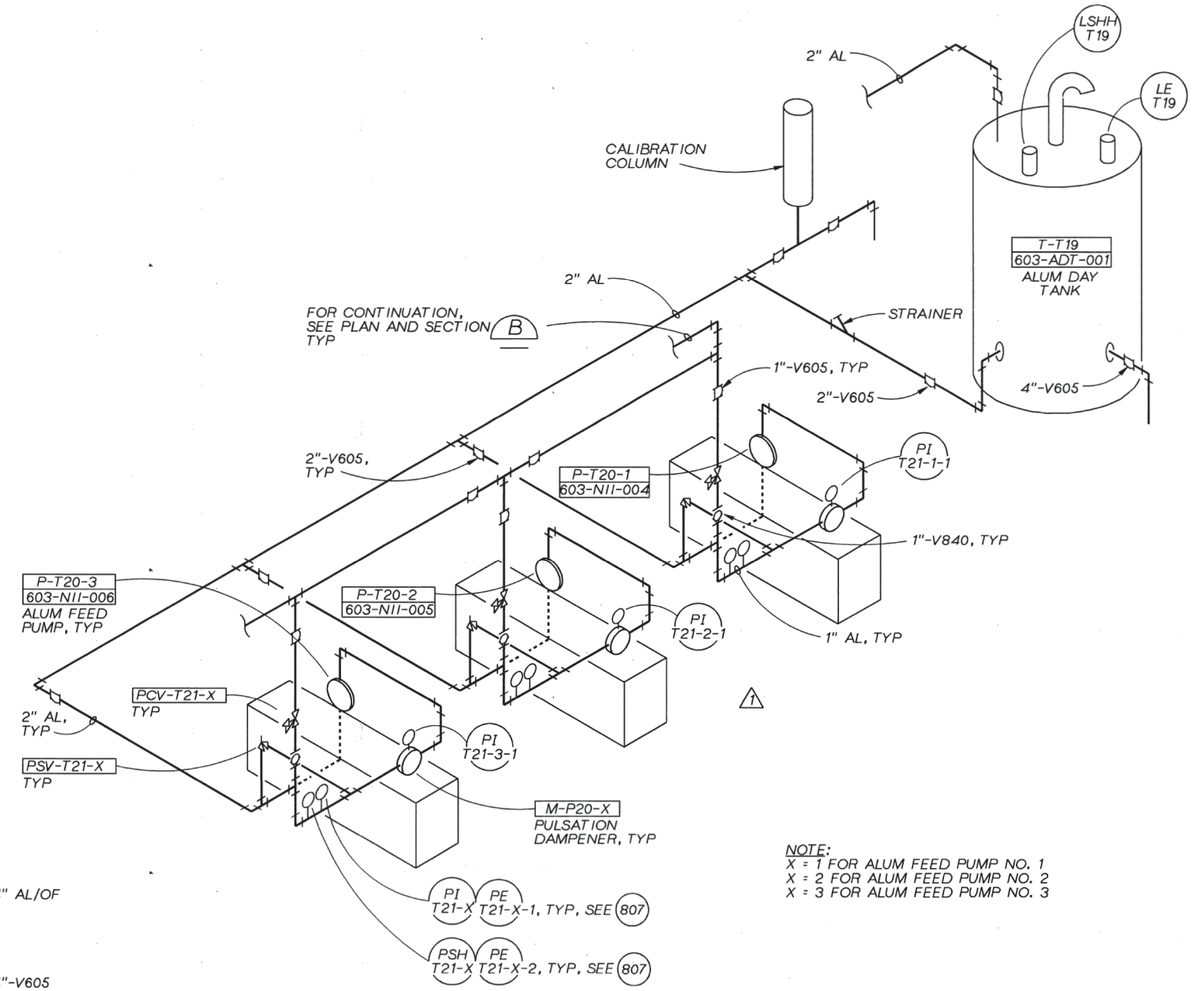

NOTE:
X = 1 FOR ALUM FEED PUMP NO. 1
X = 2 FOR ALUM FEED PUMP NO. 2
X = 3 FOR ALUM FEED PUMP NO. 3

ISOMETRIC DETAIL C
NTS 4A-M-0

NOTE:
FOR PIPING IN ALUM FEED AREA, SEE FIELD CONDITIONS.

RECORD DRAWINGS
REVISIONS DRAWN BY BAY **DATE** 7/1993

THESE RECORD DRAWINGS HAVE BEEN PREPARED, IN PART, ON THE BASIS OF INFORMATION COMPILED BY OTHERS. THEY ARE NOT INTENDED TO REPRESENT IN DETAIL THE EXACT LOCATION, TYPE OF COMPONENT NOR MANNER OF CONSTRUCTION. THE ENGINEER WILL NOT BE RESPONSIBLE FOR ANY ERRORS OR OMISSIONS WHICH HAVE BEEN INCORPORATED INTO THE RECORD DRAWINGS.

CH2MHILL

DSGN BA YOUKER
DR KL MCCOY
CHK E SEEGMUELLER
APVD RM BRACKEN

NO.	DATE	REVISION	BY	APVD
-	7/93	RECORD DRAWING	BAY	RMB
2	1/92	CL-T-176		
1	1/91	ADDENDUM NO. 4	BAY	RMB

REUSE OF DOCUMENTS
THIS DOCUMENT, AND THE IDEAS AND DESIGNS INCORPORATED HEREIN, AS AN INSTRUMENT OF PROFESSIONAL SERVICE, IS THE PROPERTY OF CH2M HILL AND IS NOT TO BE USED, IN WHOLE OR IN PART, FOR ANY OTHER PROJECT WITHOUT THE WRITTEN AUTHORIZATION OF CH2M HILL.
©CH2M HILL

VERIFY SCALE
BAR IS ONE INCH ON ORIGINAL DRAWING.
0 1"
IF NOT ONE INCH ON THIS SHEET, ADJUST SCALES ACCORDINGLY.

ROCK CREEK
ADVANCED WASTE TREATMENT PLANT
UNIFIED SEWERAGE AGENCY
WASHINGTON COUNTY, OREGON

TERTIARY COMPLEX
MECHANICAL

TERTIARY FEED PUMP STATION ISOMETRIC AND SECTIONS

SHEET 163
DWG NO. 4-M-1A
DATE NOV 1990
PROJ NO. PDX21262.M1

AF ACTIFLO

Plot Date: 12-MAR-2014 2:32:21 PM
User: MGabel
Model: Layout1 ColorTable: gshade.ctb DesignScript: Carollo_Std_Pen_v0905.pen PlotScale: 2:1
LAST SAVED BY: mgabel

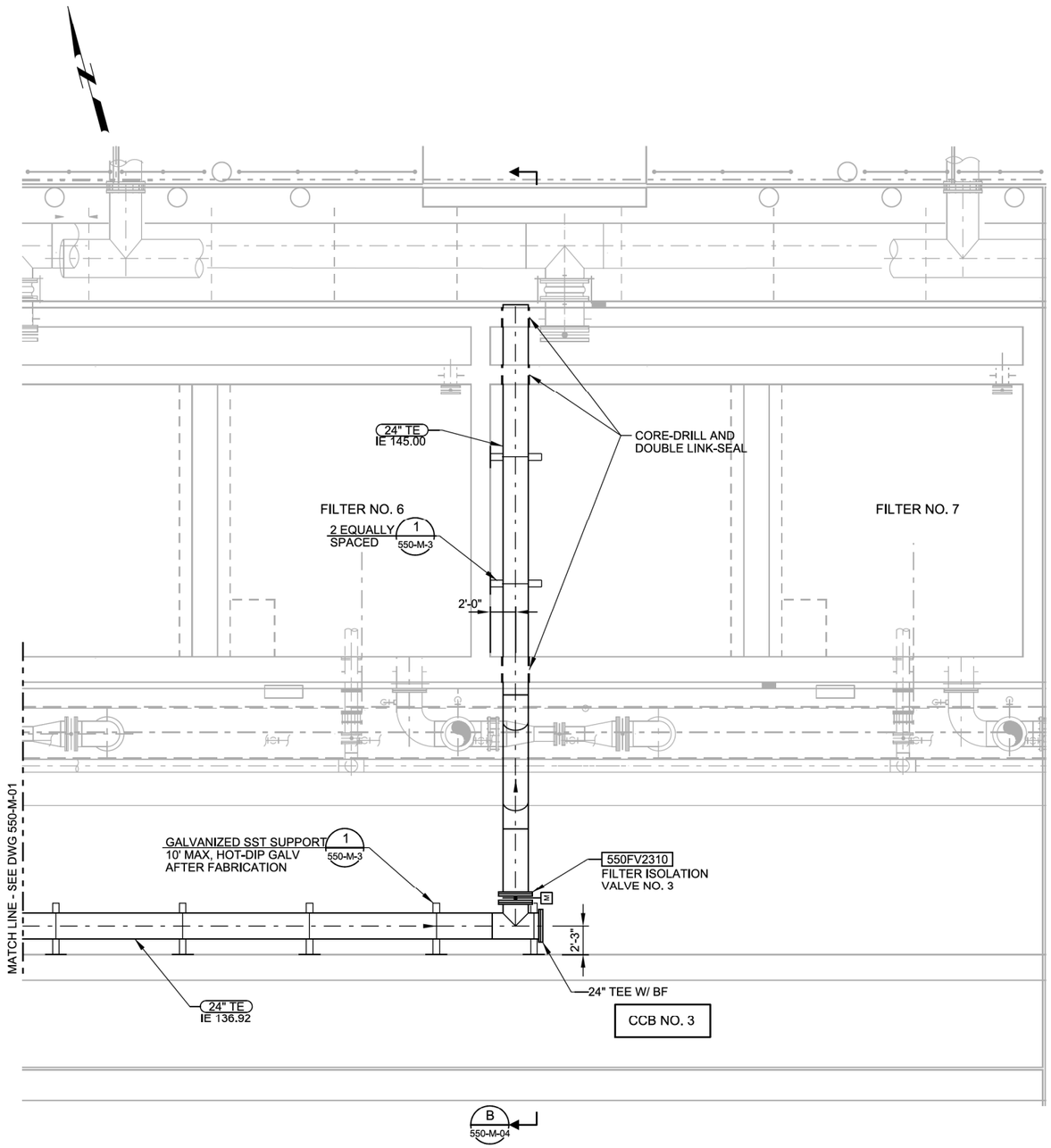

PLAN
SCALE: 3/16" = 1'-0"
FILE: 7182E12-550-050-101

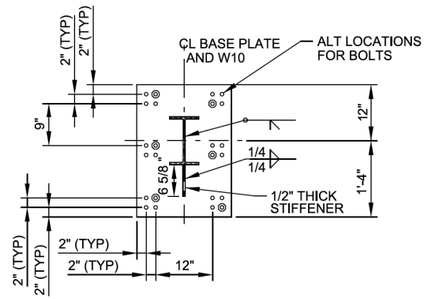

C - SECTION
SCALE: 3/4" = 1'-0"
FILE: 7182E12-590-040-408

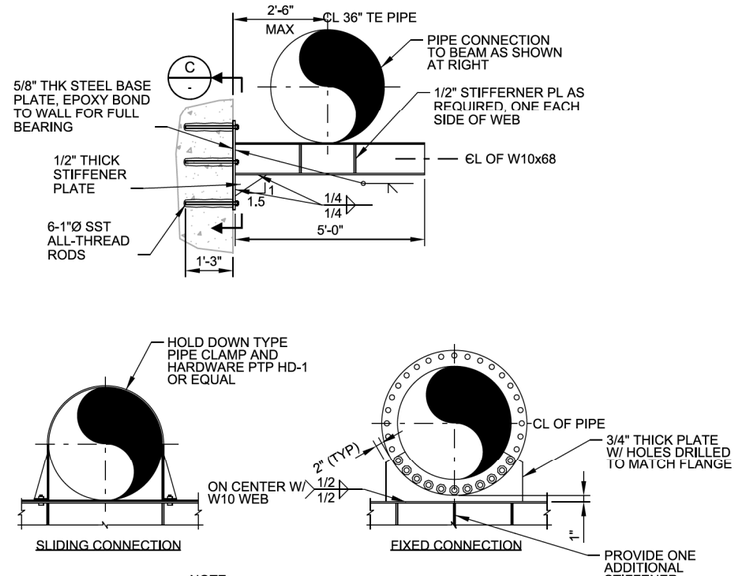

NOTE:
MAX SUPPORT SPACING 12'-0".

2 - DETAIL
SCALE: 1/2" = 1'-0"
FILE: 7182E12-590-040-408

REV	DATE	BY	DESCRIPTION
			RECORD DRAWING

DESIGNED RJN
DRAWN MJG
CHECKED VR
DATE FEB 2014

** ORIGINAL STAMPED BY ROBERT J. NORTON FEB 2012 15286 **

PROJECT ENGINEER

carollo®

CleanWater Services
Our commitment is clear.

CLEAN WATER SERVICES
TERTIARY TREATMENT PROJECT
MECHANICAL
FILTER GALLERY EXPANSION - II

VERIFY SCALES
BAR IS ONE INCH ON ORIGINAL DRAWING
0 1"
IF NOT ONE INCH ON THIS SHEET, ADJUST SCALES ACCORDINGLY

JOB NO. 7182E.12
DRAWING NO. 550-M-02
SHEET NO. 54 OF 144

PROJECT NO. 7182E12 FILE NAME: 7182E12-550-M-002.dgn

Plot Date: 12-MAR-2014 2:32:21 PM
User: MGabel
Model: Layout1 ColorTable: gshade.ctb DesignScript: Carollo_Std_Pen_v0905.pen PlotScale: 2:1
LAST SAVED BY: mgabel

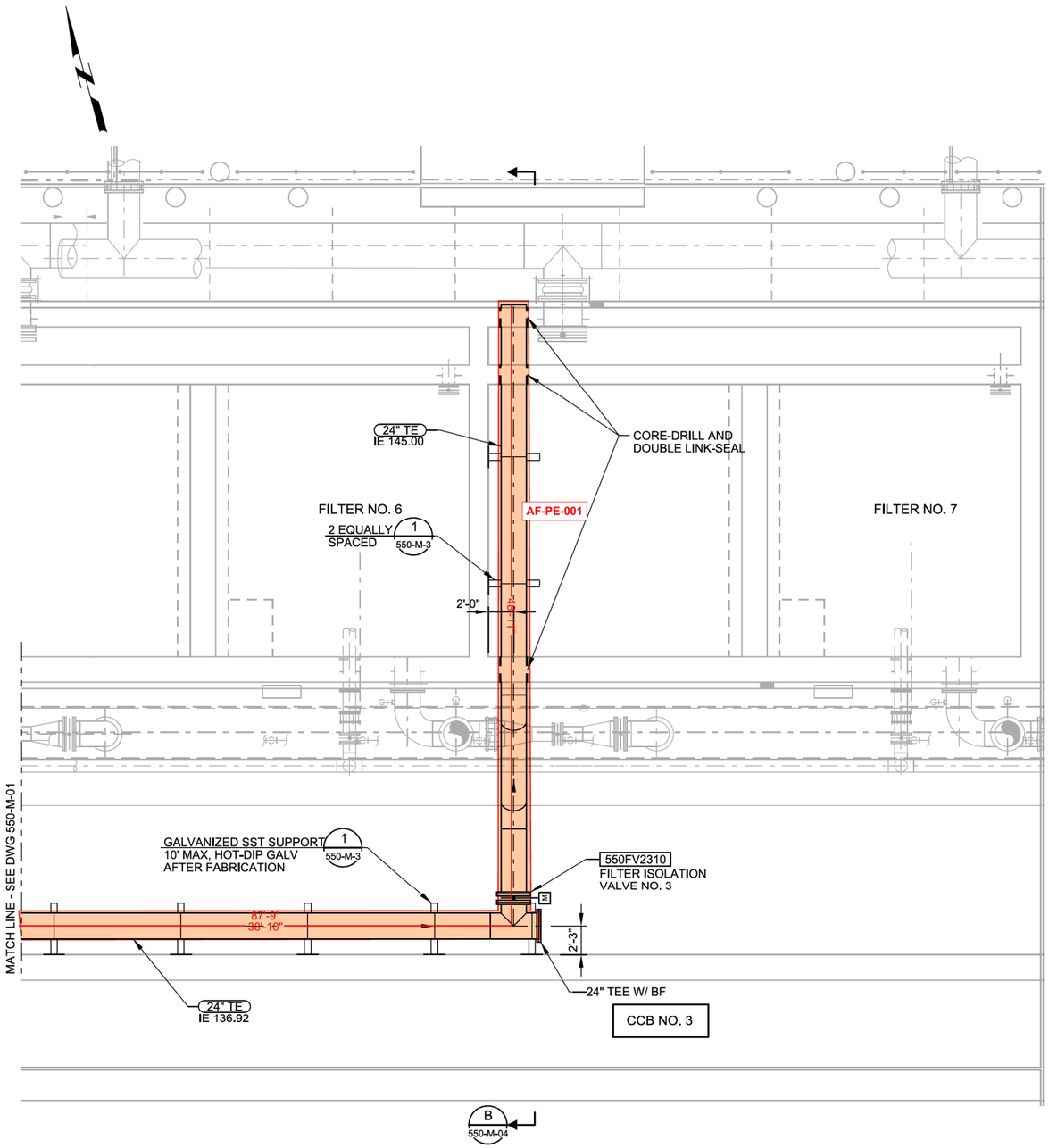

PLAN
SCALE: 3/16" = 1'-0"
FILE: 7182E12-550-050-101

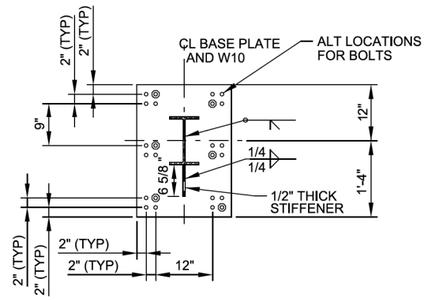

C - SECTION
SCALE: 3/4" = 1'-0"
FILE: 7182E12-590-040-408

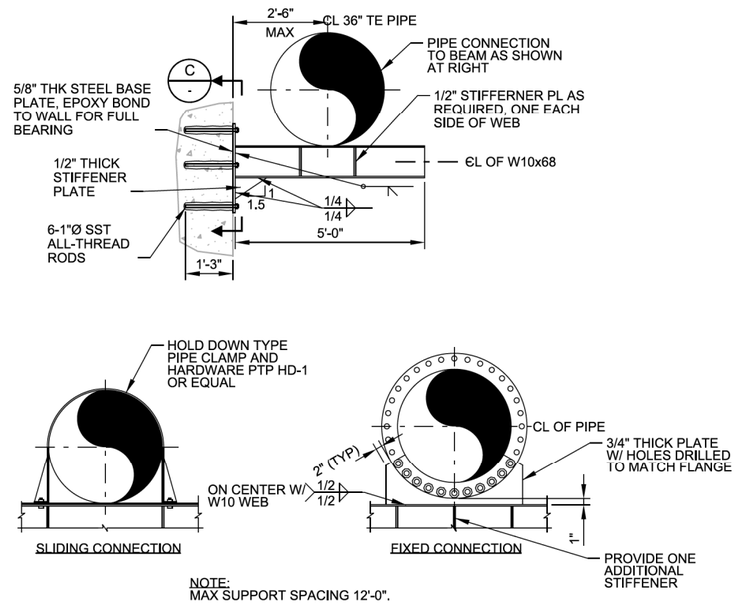

NOTE:
MAX SUPPORT SPACING 12'-0".

2 - DETAIL
SCALE: 1/2" = 1'-0"
FILE: 7182E12-590-040-408

REV	DATE	BY	DESCRIPTION

RECORD DRAWING

DESIGNED RJN
DRAWN MJG
CHECKED VR
DATE FEB 2014

** ORIGINAL STAMPED BY ROBERT J. NORTON FEB 2012 15286 **

PROJECT ENGINEER

carollo®

CleanWater Services
Our commitment is clear.

CLEAN WATER SERVICES
TERTIARY TREATMENT PROJECT
MECHANICAL
FILTER GALLERY EXPANSION - II

VERIFY SCALES
BAR IS ONE INCH ON ORIGINAL DRAWING
0 1"
IF NOT ONE INCH ON THIS SHEET, ADJUST SCALES ACCORDINGLY

JOB NO. 7182E.12
DRAWING NO. 550-M-02
SHEET NO. 54 OF 144

PROJECT NO. 7182E12 FILE NAME: 7182E12-550-M-002.dgn

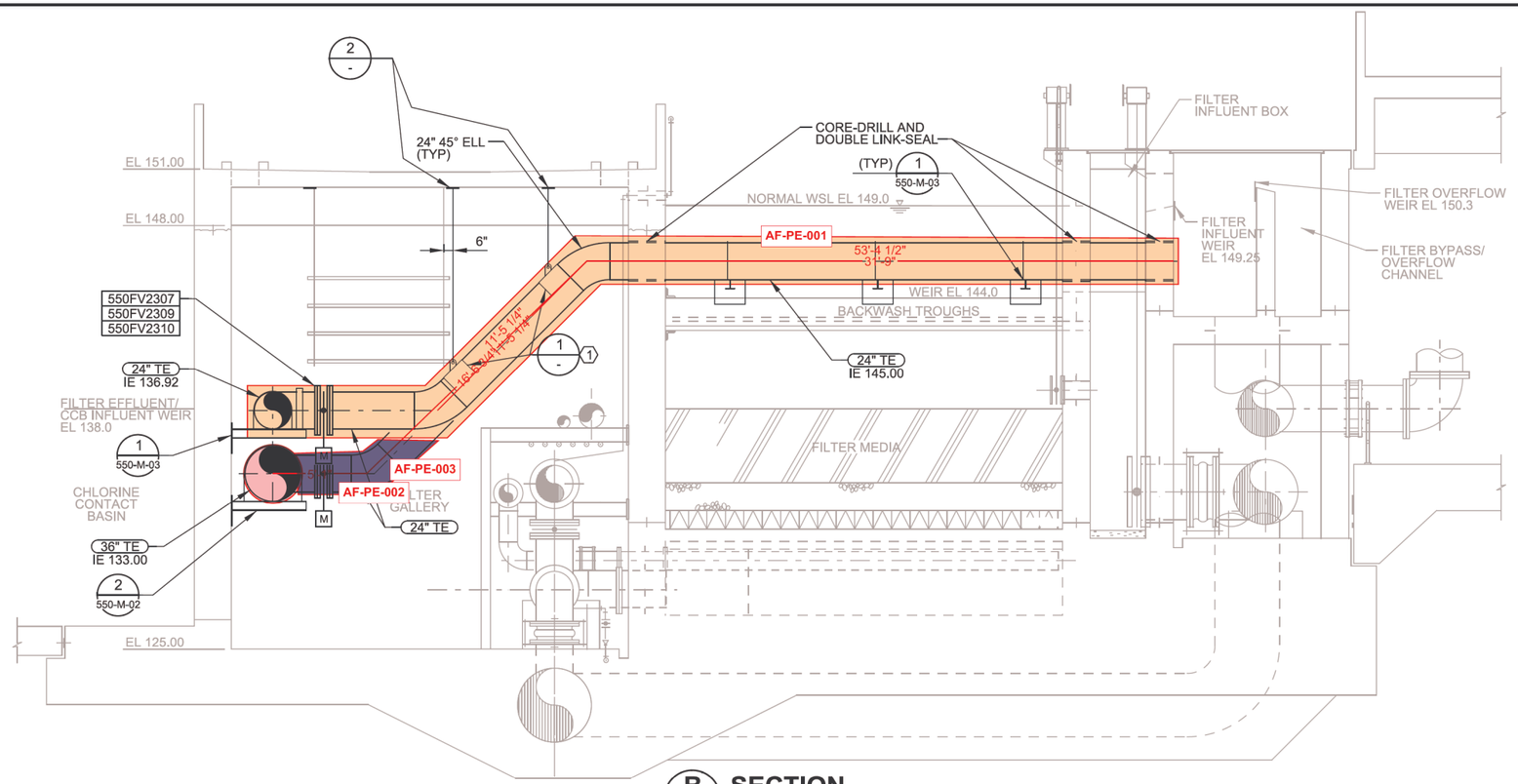

B SECTION

B 550-M-01 — SCALE: 1/4" = 1'-0"
FILE: 7182E10-550-050-301

550-M-02

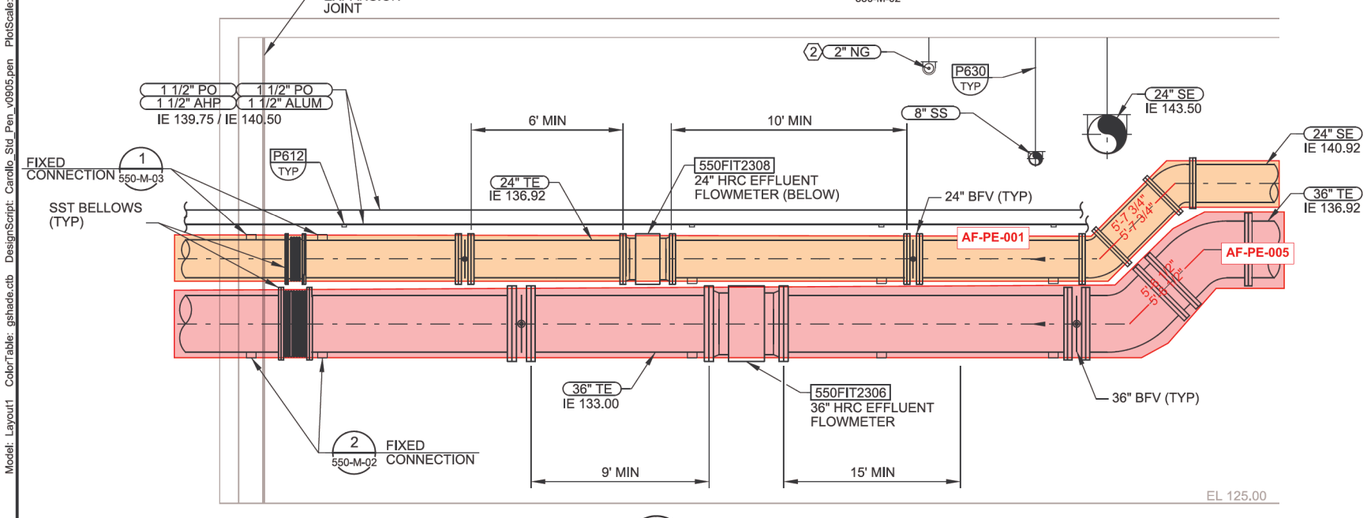

C SECTION

C 550-M-01 — SCALE: 1/4" = 1'-0"
FILE: 7182E10-550-050-304

KEY NOTES:

1. TYPICAL FOR 3 LOCATIONS.
2. ROUTE 2" NG THRU 6" PIPE SLEEVE ENCASED IN CONCRETE BEAM.

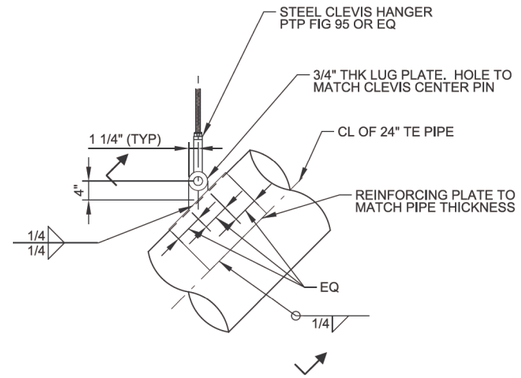

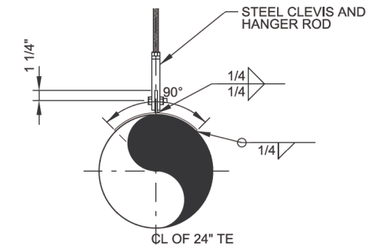

1 DETAIL

1 - SCALE: 3/4" = 1'-0"
FILE: 7182E10-550-050-401

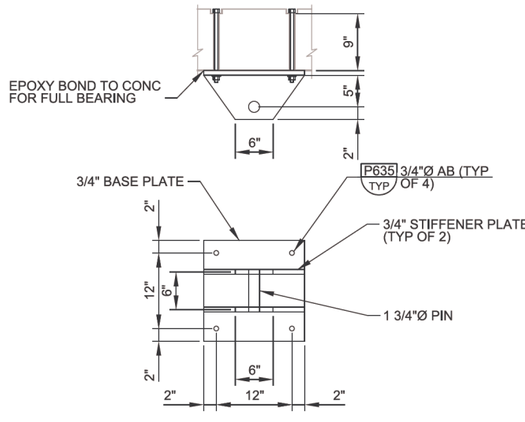

2 DETAIL

2 - SCALE: 1/2" = 1'-0"
FILE: 7182E10-550-040-402

REV	DATE	BY	DESCRIPTION
			RECORD DRAWING
			COR 31, 24
			RFI 19, 88, 94, 102, 111, 133

DESIGNED RJN
DRAWN MJG
CHECKED VR
DATE FEB 2014

** ORIGINAL STAMPED BY ROBERT J. NORTON FEB 2012 15286 **

PROJECT ENGINEER

carollo®

CleanWater Services
Our commitment is clear.

CLEAN WATER SERVICES
TERTIARY TREATMENT PROJECT
MECHANICAL
FILTER GALLERY EXPANSION - SECTIONS

VERIFY SCALES
BAR IS ONE INCH ON ORIGINAL DRAWING
0 1"
IF NOT ONE INCH ON THIS SHEET, ADJUST SCALES ACCORDINGLY

JOB NO. 7182E.12
DRAWING NO. 550-M-04
SHEET NO. 56 OF 144

PROJECT NO. 7182E12 FILE NAME: 7182E12-550-M-004.dgn

LAST SAVED BY: mgabel Model: Layout1 ColorTable: gshade.ctb DesignScript: Carollo_Std_Pen_v0905.pen PlotScale: 2:1 User: MGabel Plot Date: 12-MAR-2014 2:32:49 PM

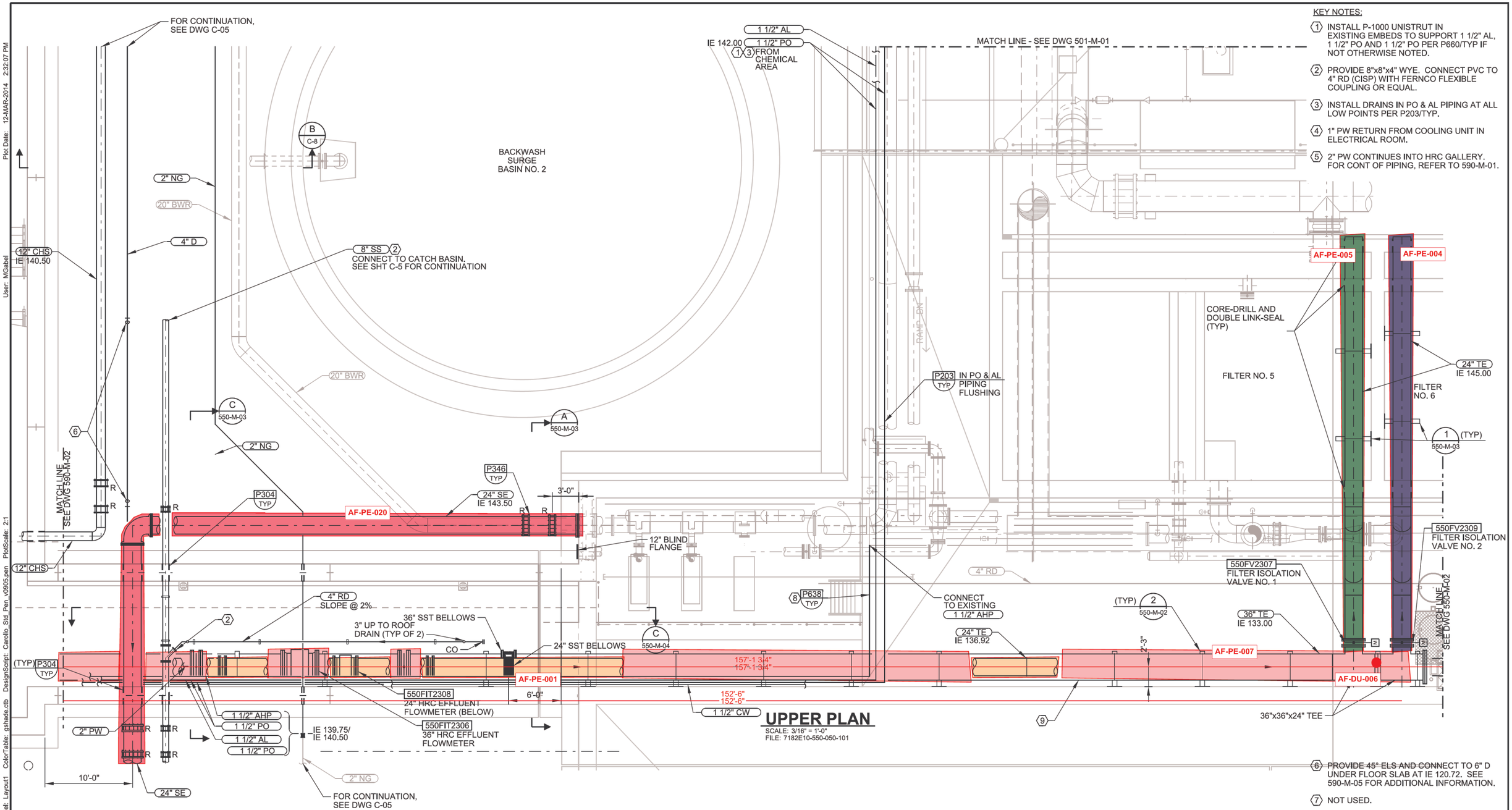

UPPER PLAN

SCALE: 3/16" = 1'-0"
FILE: 7182E10-550-050-101

KEY NOTES:

1. INSTALL P-1000 UNISTRUT IN EXISTING EMBEDS TO SUPPORT 1 1/2" AL, 1 1/2" PO AND 1 1/2" PO PER P660/TYP IF NOT OTHERWISE NOTED.
2. PROVIDE 8"x8"x4" WYE. CONNECT PVC TO 4" RD (CISP) WITH FERNCO FLEXIBLE COUPLING OR EQUAL.
3. INSTALL DRAINS IN PO & AL PIPING AT ALL LOW POINTS PER P203/TYP.
4. 1" PW RETURN FROM COOLING UNIT IN ELECTRICAL ROOM.
5. 2" PW CONTINUES INTO HRC GALLERY. FOR CONT OF PIPING, REFER TO 590-M-01.
6. PROVIDE 45° ELS AND CONNECT TO 6" D UNDER FLOOR SLAB AT IE 120.72. SEE 590-M-05 FOR ADDITIONAL INFORMATION.
7. NOT USED.
8. PROVIDE HANGER RODS IN EXISTING CONCRETE SLAB PER P635/TYP.
9. TWO FIXED SUPPORTS WILL BE PROVIDED FOR BOTH THE 24" x 36" TE PIPES AND LOCATED PER THE ENGINEER'S DIRECTION. THE REMAINDER OF THE SUPPORTS ARE SLIDING CONNECTION TYPE.

REV	DATE	BY	DESCRIPTION
			RECORD DRAWING
			RFI 19, 27, 46, 87, 90, 135, 171
			COR 18, 50

DESIGNED RJN
DRAWN MJG
CHECKED VR
DATE FEB 2014

** ORIGINAL STAMPED BY ROBERT J. NORTON FEB 2012 15286 **

PROJECT ENGINEER

carollo

Clean Water Services
Our commitment is clear.

CLEAN WATER SERVICES
TERTIARY TREATMENT PROJECT
MECHANICAL
FILTER GALLERY EXPANSION PLAN - I

VERIFY SCALES
BAR IS ONE INCH ON ORIGINAL DRAWING
0 1"
IF NOT ONE INCH ON THIS SHEET, ADJUST SCALES ACCORDINGLY

JOB NO. 7182E.12
DRAWING NO. 550-M-01
SHEET NO. 53 OF 144

PROJECT NO. 7182E12 FILE NAME: 7182E12-550-M-001.dgn

Plot Date: 12-MAR-2014 2:32:07 PM
User: MGabel
PlotScale: 2:1
DesignScript: Carollo_Std_Pen_v0905.pen
ColorTable: gshade.ctb
Model: Layout1
LAST SAVED BY: mgabel

Plot Date: 12-MAR-2014 2:33:37 PM
User: MGabel
PlotScale: 2:1
DesignScript: Carollo_Std_Pen_v0905.pen
ColorTable: gshade.ctb
Model: Layout1
LAST SAVED BY: mgabel

KEY NOTES:

1. INSTALL AL PIPE PER M319/TYP.
2. PIPE SUPPORTS MAX EVERY 6'.
3. TUBE SETTLERS NOT SHOWN FOR CLARITY.
4. PROVIDE 2" SND PIPE SPOOL W/ BLIND FLANGE BOTH SIDES FOR FUTURE INSTALLATION.
5. PROVIDED BY HRC SUPPLIER.
6. SEE DETAIL 1/-.

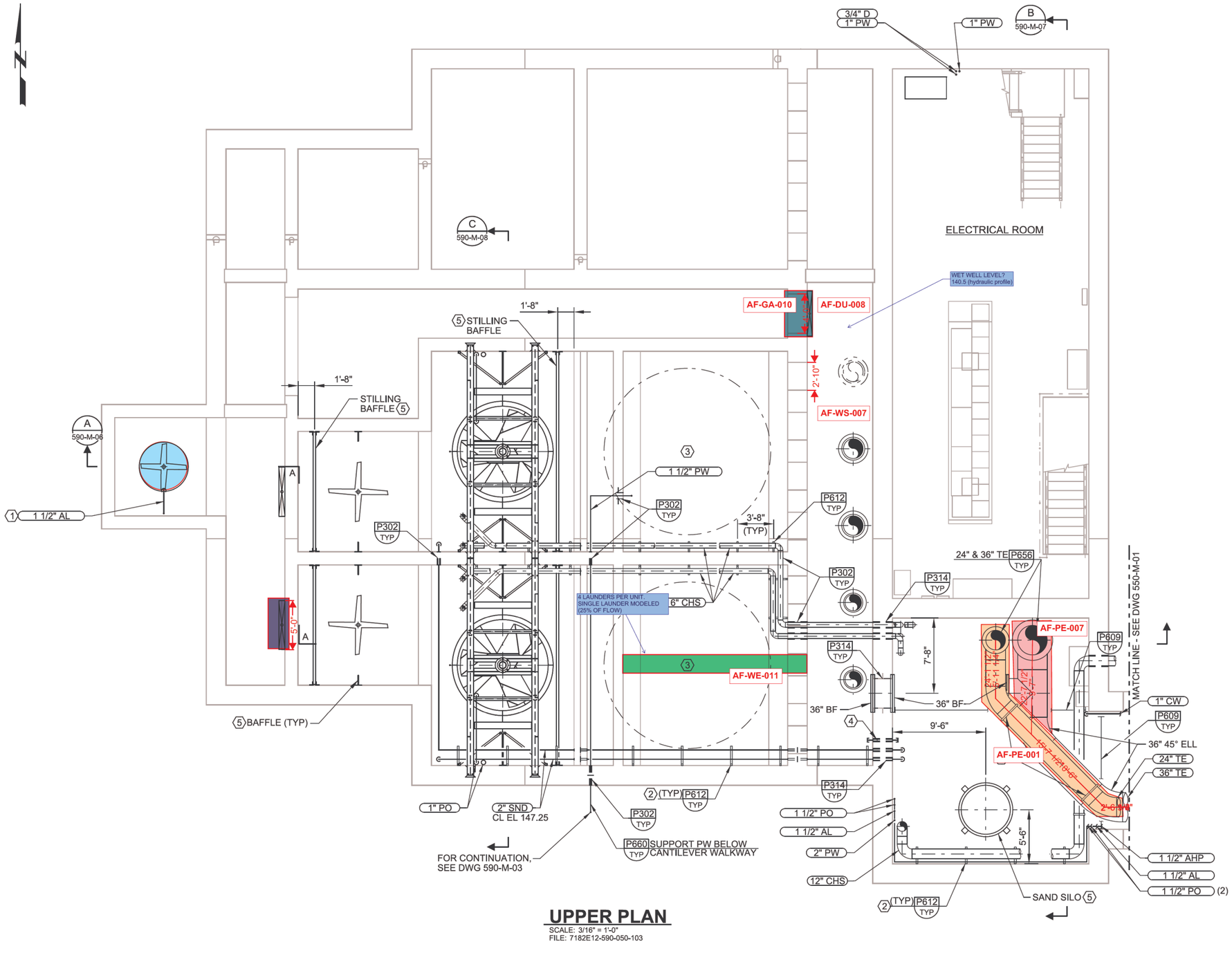

UPPER PLAN

SCALE: 3/16" = 1'-0"
FILE: 7182E12-590-050-103

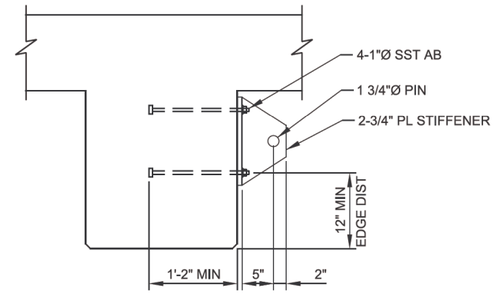

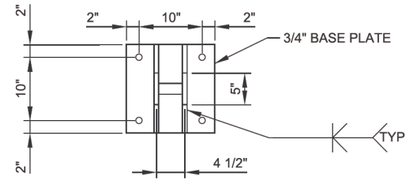

1 CLEVIS PLATE DETAIL

SCALE: 1" = 1'-0"
FILE: 7182E12-590-040-409

REV	DATE	BY	DESCRIPTION
			RECORD DRAWING
			RFI 87, 94, 133, 135

DESIGNED CFS
DRAWN MJG
CHECKED VR
DATE FEB 2014

** ORIGINAL STAMPED BY JEFFREY F. McCORMICK FEB 2012 19616PE **

PROJECT ENGINEER

carollo®

CleanWater Services
Our commitment is clear.

CLEAN WATER SERVICES
TERTIARY TREATMENT PROJECT
MECHANICAL
HIGH RATE CLARIFIERS
UPPER PLAN

VERIFY SCALES
BAR IS ONE INCH ON ORIGINAL DRAWING
0 1"
IF NOT ONE INCH ON THIS SHEET, ADJUST SCALES ACCORDINGLY

JOB NO. 7182E.12
DRAWING NO. 590-M-02
SHEET NO. 76 OF 144

PROJECT NO. 7182E12 FILE NAME: 7182E12-590-M-002.dgn

Plot Date: 12-MAR-2014 2:33:51 PM
User: MGabel
PlotScale: 2:1
DesignScript: Carollo_Std_Pen_v0905.pen
ColorTable: gshade.ctb
Model: Layout1
LAST SAVED BY: mgabel

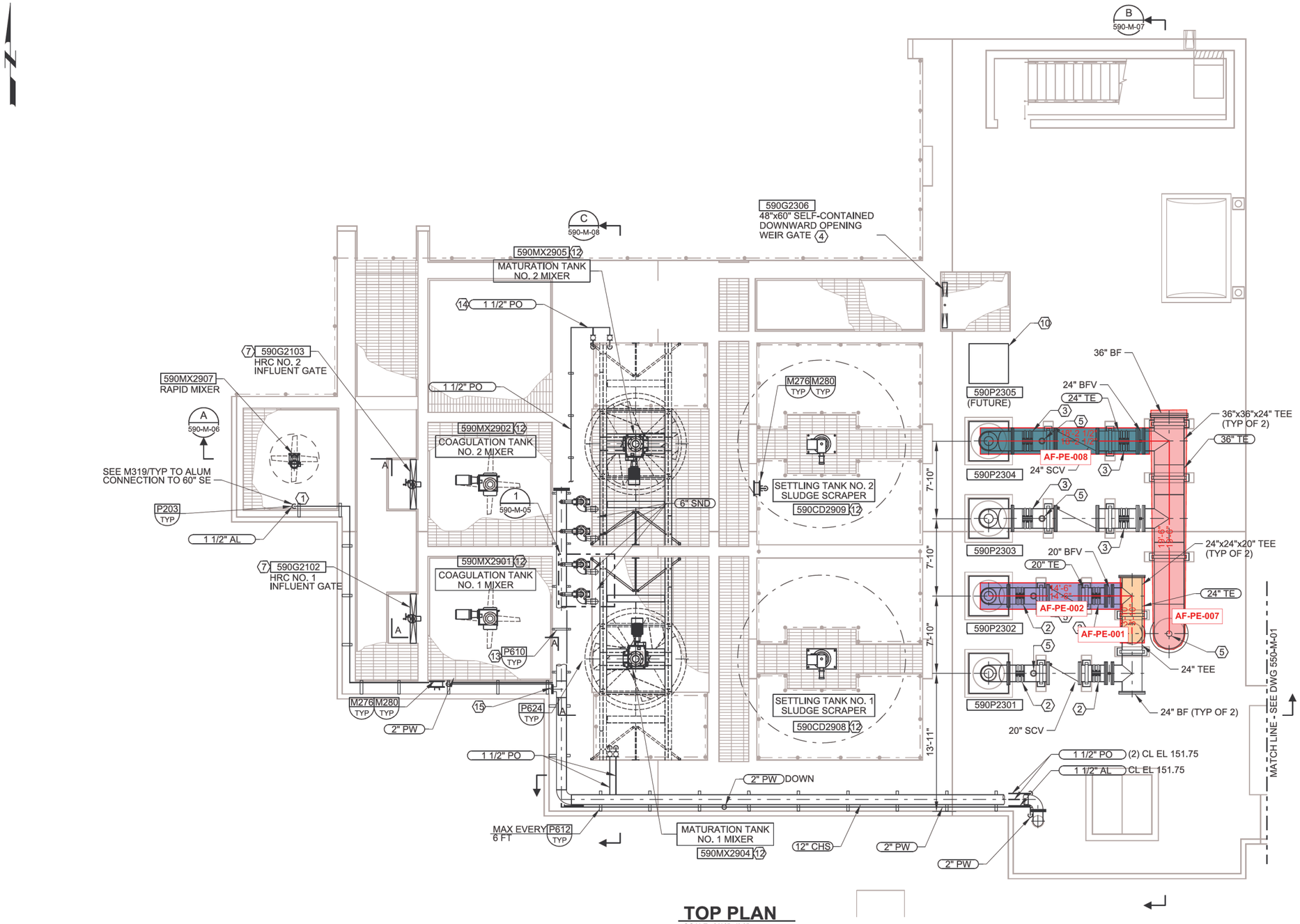

TOP PLAN

SCALE: 3/16"=1'-0"
FILE: 7182E10-590-050-102

GENERAL NOTES:

1. SLOPE PO & AL PIPING BACK TO GALLERY. INSTALL DRAINS PER P203/TYP AT ALL LOW POINTS.

KEY NOTES:

1. BALL VALVE IN VERTICAL ABOVE GRATING.
2. 20" 2-PIECE BSSC, FxF, TYP OF 4.
3. 24" 2-PIECE BSSC, FxF, TYP OF 4.
4. REFER TO DRAWING 590-S-08 FOR INFORMATION ON OPENING IN WALL.
5. 2" AIR/VACUUM RELIEF VALVE. ROUTE DRAIN TO SETTLING TANK. INSTALL PER P242/TYP.
6. INSTALL FLEXIBLE CONNECTION MAX 36" CL TO EDGE OF ENCASEMENT.
7. FLUSH BOTTOM SLIDE GATE.
8. SUPPORT PO PIPING ON BEAM.
9. NOT USED.
10. PROVIDE 48"x48" x1/4" STEEL PLATE. MATCH BOLT HOLE SIZE & CONFIGURATION OF PUMP BASE PLATES.
11. PIPE SUPPORT SPACING MAX EVERY 6'.
12. PROVIDED BY THE HRC EQUIPMENT SUPPLIER.
13. MAX SPACING EVERY 6 FEET.
14. ROUTE 1 1/2" PD ALONG TURBO/DRAFT TUBE SUPPORT 18" OC. ANGLE PIPE 90° AWAY FROM WALL 3" BELOW TOP OF DRAFT TUBE THEN TERMINATE.
15. 12"x12"x6" TEE WITH 6" BLIND FLANGE FOR FUTURE 6" CHS.

REV	DATE	BY	DESCRIPTION
			RECORD DRAWING
			DC 2
			COR 37

DESIGNED CFS
DRAWN MJG
CHECKED VR
DATE FEB 2014

** ORIGINAL STAMPED BY JEFFREY F. McCORMICK FEB 2012 19616PE **

PROJECT ENGINEER

carollo®

CleanWater Services
Our commitment is clear.

CLEAN WATER SERVICES
TERTIARY TREATMENT PROJECT
MECHANICAL
HIGH RATE CLARIFIERS TOP PLAN

VERIFY SCALES
BAR IS ONE INCH ON ORIGINAL DRAWING
0 1"
IF NOT ONE INCH ON THIS SHEET, ADJUST SCALES ACCORDINGLY

JOB NO. 7182E,12
DRAWING NO. 590-M-03
SHEET NO. 77 OF 144

PROJECT NO. 7182E12 FILE NAME: 7182E12-590-M-003.dgn

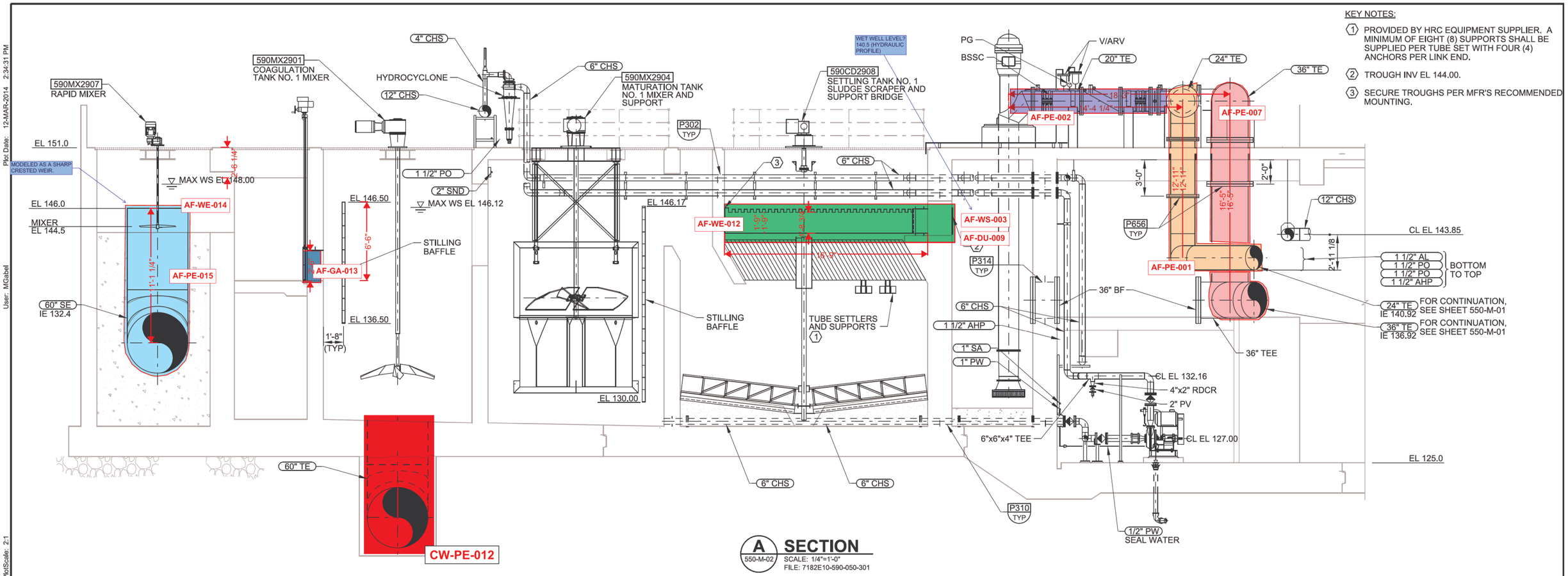

A SECTION
550-M-02
SCALE: 1/4"=1'-0"
FILE: 7182E10-590-050-301

Model: Layout1 ColorTable: gshade.ctb DesignScript: Carollo_Std_Pen_v0905.pen PlotScale: 2:1 User: MGabel Plot Date: 12-MAR-2014 2:34:31 PM LAST SAVED BY: mgabel

REV	DATE	BY	DESCRIPTION
			RECORD DRAWING
			DC 11

DESIGNED CFS | DRAWN MJG | CHECKED VR | DATE FEB 2014

** ORIGINAL STAMPED BY JEFFREY F. McCORMICK FEB 2012 19616PE **

PROJECT ENGINEER

CLEAN WATER SERVICES

TERTIARY TREATMENT PROJECT

MECHANICAL

HIGH RATE CLARIFIERS
SECTIONS AND DETAILS - I

VERIFY SCALES
BAR IS ONE INCH ON ORIGINAL DRAWING
0 1"
IF NOT ONE INCH ON THIS SHEET, ADJUST SCALES ACCORDINGLY

JOB NO. 7182E.12

DRAWING NO. 590-M-06

SHEET NO. 80 OF 144

PROJECT NO. 7182E12 FILE NAME: 7182E12-590-M-006.dgn

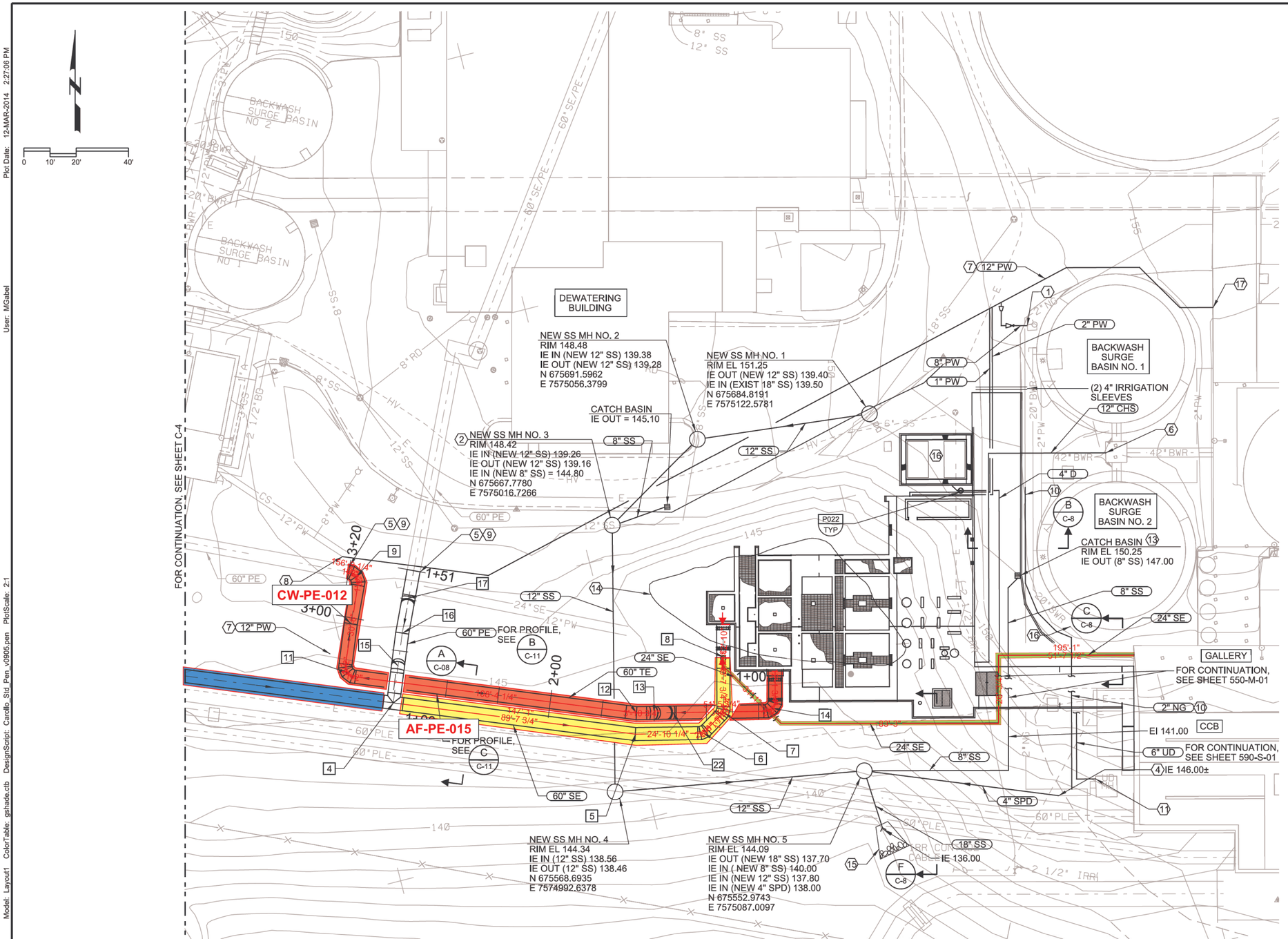

PARTIAL SITE PLAN

SCALE: 1" = 20'
FILE: 7182E10-010-101

GENERAL NOTES:

1. EXISTING UTILITY LOCATIONS SHOWN ARE FROM RECORD DRAWING INFORMATION. NOT ALL EXISTING BURIED UTILITIES MAY BE SHOWN. CONTRACTOR SHALL POTHOLE AND LOCATE ALL EXISTING UTILITIES PRIOR TO COMMENCING EXCAVATION.
2. REMOVE AND REPLACE EXISTING CURB AS REQUIRED TO INSTALL NEW PIPING. NEW CURBING SHALL MATCH EXISTING.
3. PLACE TOPSOIL OVER ALL DISTURBED AREAS AFTER COMPLETION OF THE WORK PER SECTION 02900.
4. LOCATE EXISTING IRRIGATION SYSTEM PRIOR TO COMMENCING EXCAVATION ACTIVITIES. RESTORE IRRIGATION SYSTEM TO PRE-CONSTRUCTION CONDITION AFTER WORK IS COMPLETE. SEE RECORD IRRIGATION DRAWINGS FOR ADDITIONAL INFORMATION.

KEY NOTES:

1. RECONNECT NEW 8" PW TO EXISTING.
2. AT CONTRACTOR'S OPTION, PROTECT OR REPLACE SS MH.
3. NOT USED.
4. CONNECT TO EXIST 4" SPD PIPE.
5. CONNECT TO EXIST 60" PE, IE 127.80±. FOR BIDDING PURPOSES, ASSUME CONNECTION OF NEW 60" PE (STEEL) TO THE EXISTING 60" PE WILL BE PER DETAIL 1/C-11.
6. CONNECT TO EXIST SURGE BASIN DISTRIBUTION BOX. CORE-DRILL AND LINK-SEAL PIPE. IE 140.50.
7. PROVIDE MINIMUM 3' OF COVER.
8. CONNECT TO EXIST 12" PW.
9. THE EXISTING 60" PE PIPE MATERIAL IS UNKNOWN. RECORD DRAWINGS INDICATE THE MATERIAL IS EITHER PRETENSIONED CCP, CLASS 100 PER AWWA C303 OR RCP (REINFORCED CONCRETE PIPE), D LOAD. PRIOR TO ORDERING 60" PE AND TE FITTINGS FOR CONNECTING TO THE EXISTING 60" PE, CONTRACTOR SHALL POTHOLE AND VERIFY THE FOLLOWING INFORMATION AND SUBMIT TO ENGINEER FOR REVIEW:
   A.) PIPE MATERIAL.
   B.) INVERT ELEVATIONS.
   C.) CLOSEST UPSTREAM AND DOWNSTREAM JOINT LOCATIONS BY DIMENSION AND COORDINATES.
10. ROUTE EXIST 2" NG THRU PIPE GALLERY. MAINTAIN NG SERVICE THROUGHOUT PROJECT. INSTALL TEMPORARY PIPING AS REQUIRED TO MAINTAIN SERVICE. SEE SECTION 01140 FOR ADDITIONAL INFORMATION.
11. CONNECT TO EXIST UNDERDRAIN PUMP STATION. CORE-DRILL AND LINK-SEAL PIPE. IE 120.50.
12. EXISTING 27" RE ABANDONED AND PARTIALLY REMOVED.
13. PRE-CAST CATCH BASIN. UTILITY VAULT MODEL NO. 2024 OR EQUAL.
14. APPROXIMATE LIMIT OF EXISTING DETENTION POND.
15. ROUTE RIP-RAP AT OUTFALL PER G/C-8.
16. TRANSFORMER PAD. SEE C-10.
17. CONNECT TO EXIST 10" PW LINE LOCATED IN GALLERY. SEE 1/501-M-01.

REV	DATE	BY	DESCRIPTION	RECORD DRAWING	DESIGNED RJN DRAWN MJG CHECKED DB DATE FEB 2014	** ORIGINAL STAMPED BY JEFFREY F. McCORMICK FEB 2012 19616PE **	PROJECT ENGINEER	carollo	CleanWater Services Our commitment is clear.	CLEAN WATER SERVICES TERTIARY TREATMENT PROJECT CIVIL YARD PIPING - AREA 2

VERIFY SCALES: BAR IS ONE INCH ON ORIGINAL DRAWING (0 — 1") IF NOT ONE INCH ON THIS SHEET, ADJUST SCALES ACCORDINGLY

JOB NO. 7182E.12
DRAWING NO. C-5
SHEET NO. 26 OF 144

PROJECT NO. 7182E12 FILE NAME: 7182E12-226-C-005.dgn

LAST SAVED BY: mgabel
Model: Layout1 ColorTable: gshade.ctb DesignScript: Carollo_Std_Pen_v0905.pen PlotScale: 2:1
User: MGabel Plot Date: 12-MAR-2014 2:27:06 PM

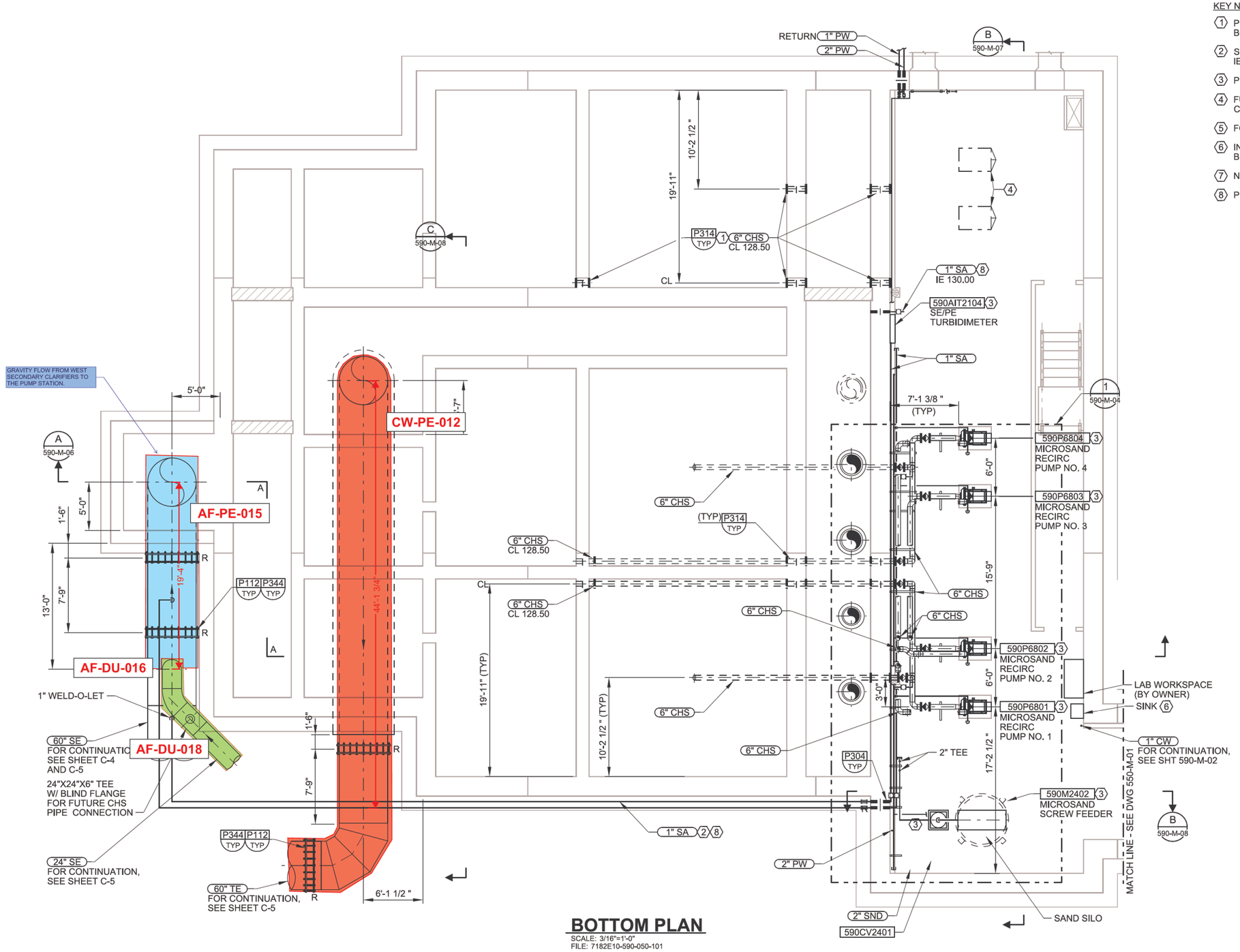

BOTTOM PLAN

SCALE: 3/16"=1'-0"
FILE: 7182E10-590-050-101

KEY NOTES:

1. PROVIDE PIPE SPOOL WITH BLIND FLANGE BOTH ENDS FOR FUTURE BASIN.
2. SLOPE SAMPLE PIPE FROM 60" TAP TO WALL. IE AT WALL AS INDICATED ON DRAWINGS.
3. PROVIDED BY HRC EQUIPMENT SUPPLIER.
4. FUTURE RECIRC PUMP PADS SHOWN FOR CLARITY.
5. FOR CONTINUATION, SEE SHT C-5.
6. INSTANT HOT WATER HEATER MOUNTED BELOW SINK.
7. NOT USED.
8. PENETRATE WALL.

REV	DATE	BY	DESCRIPTION
			RECORD DRAWING
			COR 37, 53
			RFI 19

DESIGNED CFS
DRAWN MJG
CHECKED VR
DATE FEB 2014

** ORIGINAL STAMPED BY JEFFREY F. McCORMICK FEB 2012 19616PE **

PROJECT ENGINEER

carollo

Clean Water Services
Our commitment is clear.

CLEAN WATER SERVICES
TERTIARY TREATMENT PROJECT
MECHANICAL
HIGH RATE CLARIFIERS BOTTOM PLAN

VERIFY SCALES
BAR IS ONE INCH ON ORIGINAL DRAWING
0 1"
IF NOT ONE INCH ON THIS SHEET, ADJUST SCALES ACCORDINGLY

JOB NO. 7182E.12
DRAWING NO. 590-M-01
SHEET NO. 75 OF 144

PROJECT NO. 7182E12 FILE NAME: 7182E12-590-M-001.dgn

Plot Date: 12-MAR-2014 2:33:25 PM User: MGabel Model: Layout1 ColorTable: gshade.ctb DesignScript: Carollo_Std_Pen_v0905.pen PlotScale: 2:1 LAST SAVED BY: mgabel

DATE: 6/25/93 VERSION NO.14
DGN NAME: /M2/MECH/RC4EM000.DGN

SEE (587) TYPE B
42" BWR
B 4-M-3E
5
BACKWASH SURGE BASIN NO. 4
B-F8-4
603-F08-SB4
14" BWR FOR CONTINUATION SEE DWG 1-C-33
A 4-M-3E
TO BACKWASH SURGE BASINS
A 4-M-5E
13'-6"
5'-0"
4'-0"
2
MATCH LINE, SEE DWG 4B-M-0
SEE (500)
CONC PIPE SUPPORT, TYP FOR TYPES AND LOCATIONS SEE STRUCTURAL PLANS
RUBBER EXPANSION JOINT W/THRUST TIES
42" BWR ℄ 133.5
36" BWR ℄ 133.5
SEE (587) TYPE F
D 4-M-3E 4-M-3F
24" SE
16" BWR
FIT F8-2
SEE (812)
FE F8-2
603-TFT-002
FV F55
12" BWD, INVT 138.5
FV F56
SEE (587) TYPE E
FILTER NO. 5
42" FOF ℄ 122.00
4" SPD DN TO SUMP PUMPS, SEE DWG 4E-HP-0
AF-PE-018
24" SE, FROM TERTIARY CLARIFIER PUMP HEADER
UTILITY GALLERY
FOR CONT OF AIR SCOUR HEADER SEE DWG 4-M-2F
SEE (583) TYPE B
½" SAMPLE TAP
1¼" GALVS VENT UP
SEE (587) TYPE D
24" BWS/FB
4" D
24" BWS
24"-V512
24" FE
MATCH LINE, SEE DWG 4F-M-0
FOR CONT OF PIPING, SEE YARD PIPING DWG 1-C-33
TO ACTIFLO FROM TERTIARY PUMP STATION
C 4-M-3E
20" BWR ℄ 122.5
16" BWR ℄ 126.67
SEE (518)
12" PW
2" DCS
2" CS
2" AI
¾" CW
B 4-M-3F
5'-0"
3'-10"
1
35'-8 1/2"
3
24" SE
12" PW
SEE (505)
PI F8-3-1
PSL F8-3
SEE (808)
12"-V500
4" PW DN
FOR CONT SEE C 4-M-3E
FILTER GALLERY
16" PW
8" EFF
½" AI DN SEE DWG 4E-HP-0 TYP
24" BWS
12" BWA
FP-F50
SEE (828) AND (813)
LCV F50
SEE (500)
FV F53
48" FE
A 4-M-1F
PI F8-3-2
6'-0" 6'-0" 6'-0"
P-F8-4
603-F08-004
℄ LIFTING BEAM ABOVE
BACKWASH RECYCLE PUMP
P-F8-3
603-F08-003
CS-F8-3
CS-F8-4
SEE (813) TYP SIM
FI F8-2
SEE (813) SIM
A 4-M-5E
MATCH LINE, SEE DWG 4H-M-0
C 4-M-3E
CHLORINE CONTACT CHAMBER

LOWER LEVEL - PLAN

3/16 " = 1'-0"

RECORD DRAWINGS
REVISIONS DRAWN BY BAY **DATE** 7/1993

THESE RECORD DRAWINGS HAVE BEEN PREPARED, IN PART, ON THE BASIS OF INFORMATION COMPILED BY OTHERS. THEY ARE NOT INTENDED TO REPRESENT IN DETAIL THE EXACT LOCATION, TYPE OF COMPONENT NOR MANNER OF CONSTRUCTION. THE ENGINEER WILL NOT BE RESPONSIBLE FOR ANY ERRORS OR OMISSIONS WHICH HAVE BEEN INCORPORATED INTO THE RECORD DRAWINGS.

NO.	DATE	REVISION	BY	APVD
-	7/93	RECORD DRAWING	BAY	RMB
5	2/93	CL-T-292		
4	9/92	CL-T-238		
3	4/92	RELOCATED VALVE		
2	3/91	CL-T-10		
1	5/91	CL-T-49		

DSGN B SNYDER/D WALTERS
DR D MCPHERSON
CHK E SEEGMUELLER
APVD RM BRACKEN

REUSE OF DOCUMENTS
THIS DOCUMENT, AND THE IDEAS AND DESIGNS INCORPORATED HEREIN, AS AN INSTRUMENT OF PROFESSIONAL SERVICE, IS THE PROPERTY OF CH2M HILL AND IS NOT TO BE USED, IN WHOLE OR IN PART, FOR ANY OTHER PROJECT WITHOUT THE WRITTEN AUTHORIZATION OF CH2M HILL.
©CH2M HILL

VERIFY SCALE
BAR IS ONE INCH ON ORIGINAL DRAWING.
0 1"
IF NOT ONE INCH ON THIS SHEET, ADJUST SCALES ACCORDINGLY.

ROCK CREEK
ADVANCED WASTE TREATMENT PLANT
UNIFIED SEWERAGE AGENCY
WASHINGTON COUNTY, OREGON

TERTIARY COMPLEX
MECHANICAL
LOWER LEVEL
PLAN E

SHEET 144
DWG NO. 4E-M-0
DATE NOV 1990
PROJ NO. PDX21262.M1

DATE: 6/30/93 VERSION NO. 15
DGN NAME: IM2/MECH/RC4M06E.DGN

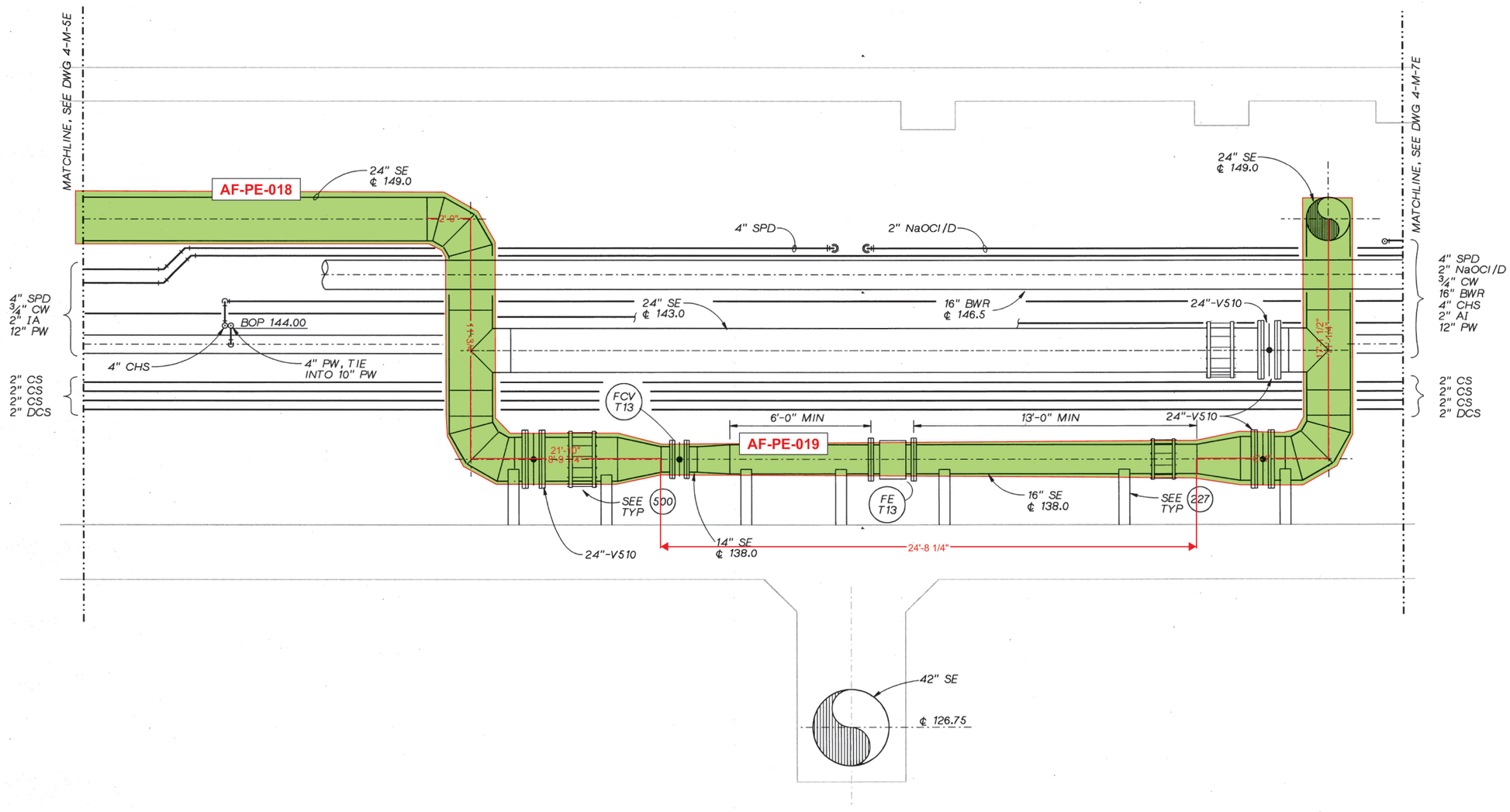

SECTION B
3/8"=1'-0"
4B-M-0
4B-M-10

RECORD DRAWINGS
REVISIONS DRAWN BY BAY **DATE** 7/1993

THESE RECORD DRAWINGS HAVE BEEN PREPARED, IN PART, ON THE BASIS OF INFORMATION COMPILED BY OTHERS. THEY ARE NOT INTENDED TO REPRESENT IN DETAIL THE EXACT LOCATION, TYPE OF COMPONENT NOR MANNER OF CONSTRUCTION. THE ENGINEER WILL NOT BE RESPONSIBLE FOR ANY ERRORS OR OMISSIONS WHICH HAVE BEEN INCORPORATED INTO THE RECORD DRAWINGS.

NO.	DATE	REVISION	BY	APVD
-	7/93	RECORD DRAWING	BAY	RMB

DSGN W. SNYDER
DR D. MCPHERSON
CHK E SEEGMUELLER
APVD RM BRACKEN

REUSE OF DOCUMENTS
THIS DOCUMENT, AND THE IDEAS AND DESIGNS INCORPORATED HEREIN, AS AN INSTRUMENT OF PROFESSIONAL SERVICE, IS THE PROPERTY OF CH2M HILL AND IS NOT TO BE USED, IN WHOLE OR IN PART, FOR ANY OTHER PROJECT WITHOUT THE WRITTEN AUTHORIZATION OF CH2M HILL.
©CH2M HILL

VERIFY SCALE
BAR IS ONE INCH ON ORIGINAL DRAWING.
0 1"
IF NOT ONE INCH ON THIS SHEET, ADJUST SCALES ACCORDINGLY.

ROCK CREEK
ADVANCED WASTE TREATMENT PLANT
UNIFIED SEWERAGE AGENCY
WASHINGTON COUNTY, OREGON

TERTIARY COMPLEX
MECHANICAL
UTILITY GALLERY SECTION

SHEET	174
DWG NO.	4-M-6E
DATE	NOV 1990
PROJ NO.	PDX21262.M1

ES EAST SECONDARY CLARIFIERS

DATE: 6/28/93 VERSION NO. 4
DGN NAME: M2/MECH/RC4DM100.DGN

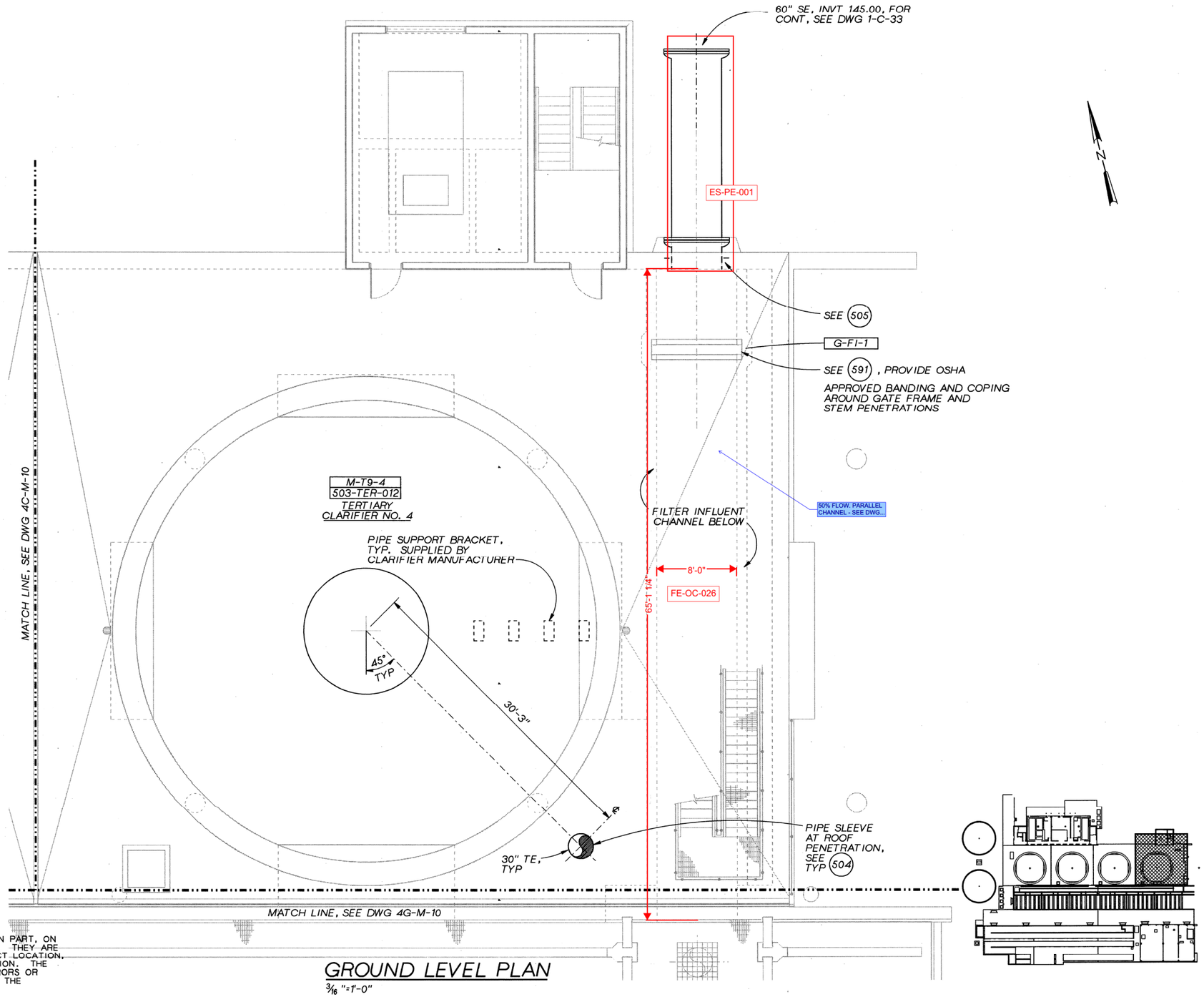

GROUND LEVEL PLAN

3/16 "=1'-0"

RECORD DRAWINGS

REVISIONS DRAWN BY BAY **DATE** 7/1993

THESE RECORD DRAWINGS HAVE BEEN PREPARED, IN PART, ON THE BASIS OF INFORMATION COMPILED BY OTHERS. THEY ARE NOT INTENDED TO REPRESENT IN DETAIL THE EXACT LOCATION, TYPE OF COMPONENT NOR MANNER OF CONSTRUCTION. THE ENGINEER WILL NOT BE RESPONSIBLE FOR ANY ERRORS OR OMISSIONS WHICH HAVE BEEN INCORPORATED INTO THE RECORD DRAWINGS.

CH2M HILL

DSGN	B YOUKER					
DR	KL MCCOY					
CHK	E SEEGMUELLER	-	7/93	RECORD DRAWING	BAY	RMB
APVD	RM BRACKEN	NO.	DATE	REVISION	BY	APVD

REUSE OF DOCUMENTS
THIS DOCUMENT, AND THE IDEAS AND DESIGNS INCORPORATED HEREIN, AS AN INSTRUMENT OF PROFESSIONAL SERVICE, IS THE PROPERTY OF CH2M HILL AND IS NOT TO BE USED, IN WHOLE OR IN PART, FOR ANY OTHER PROJECT WITHOUT THE WRITTEN AUTHORIZATION OF CH2M HILL.
©CH2M HILL

VERIFY SCALE
BAR IS ONE INCH ON ORIGINAL DRAWING.
0 1"
IF NOT ONE INCH ON THIS SHEET, ADJUST SCALES ACCORDINGLY.

ROCK CREEK
ADVANCED WASTE TREATMENT PLANT
UNIFIED SEWERAGE AGENCY
WASHINGTON COUNTY, OREGON

TERTIARY COMPLEX
MECHANICAL
GROUND LEVEL PLAN D

SHEET	153
DWG NO.	4D-M-10
DATE	NOV 1990
PROJ NO.	PDX21262.M1

MATCH LINE - SEE DWG 6D5-CY-102

SECONDARY CLARIFIER 7

SECONDARY CLARIFIER 8

SECONDARY CLARIFIER 9

SECONDARY CLARIFIER 10

CB
N 6019.10
E 3659.60
IE 150.01

TEMPORARILY RELOCATE 1 1/4" PW AND 1" ELEC CONDUIT AS REQUIRED TO INSTALL 8" SS AND RE-INSTALL. DISCONNECT CONDUCTORS FROM LIGHT AND PULL BACK TO NEXT AVAILABLE PULL POINT. DEMOLISH CONDUIT WHERE NEEDED AND REPLACE WITH NEW CONDUIT. DO NOT SPLICE EXISTING CONDUCTORS

SEE ELECTRICAL DRAWINGS FOR NEW DUCT BANK INFORMATION IN THIS AREA

4" CAPPED SLEEVE UNDER SIDEWALK, TYP OF 2 (2340)

45° BEND, IE 148.57

AREA DRAIN
N 5904.50
E 3657.06
IE 153.0

AREA DRAIN
N 5883.79
E 3740.59
IE 146.0

NEW YARD HYDRANT
45° WYE, IE 147.5

LOCATE & REMOVE BLIND FLANGE & CONNECT TO EXST 36" ML, IE 126.25

LOCATE AND CONNECT TO EXIST SAMPLE LINE

ES-PE-005

YARD HYDRANT

36" ML

1" SA

6" SSM

LOCATE AND CONNECT TO EXIST. 3" PW C/L EL 152.75

3" PW

EXST SSM BOX

STUB-OUT FOR IRRIG WATER, SEE 6D42-M-131

EXST 22 1/2° VERT BEND, IE 132.4

FIELD VERIFY

LOCATE & CONNECT TO EXST 24" RAS/WAS IE 141.5, REMOVE EXIST BLIND FLANGE

24" RAS/WAS

FOR CONTINUATION SEE 6D46-M-121

2" IRRIGATION SLEEVE

8" SS
SLOPE 2% MIN

EXTEND 8" SS 10' PAST WYE. CAP END. (PLACE 4x4 POST AT END OF PIPE CAP. PAINT WHITE)
IE 148.51
N 5977.73
E 3823.87

45° WYE-8x8
IE 148.31
N 5968.02
E 3821.46

IE 150.0

N 5860.72
E 3757.75

CORE DRILL AND CONNECT TO PLANT DRAIN PUMP STATION. IE 144.34, FIELD VERIFY. INSTALL TIDEFLEX CHECK VALVE.

CORE DRILL AND CONNECT TO PLANT DRAIN PUMP STATION IE 138.8 INSTALL TIDEFLEX CHECK VALVE BY TIDEFLEX TECHNOLOGIES, TF-2, BUNA-N, TYP (2431) SIM

LOCATE & CONNECT TO EXST. 30" SE IE 149.5, SEE 6D42-M-131

LOCATE & CONNECT TO EXST. PD & UD

2" PW

30" SE

LOCATE AND CONNECT TO EXIST SAMPLE LINE

(2335)

8" SS, IE 144.8

MH CWS NO 70

12" SS

IE 150.5

FOR ADDITIONAL PIPING INFORMATION, SEE 6D42-M-131

SUPPORT AND PROTECT EXST 60" SE DURING EXCAVATION AND CONSTRUCTION

SEE NOTE 3

IE 142.00
22.5° BEND
N 5757.83
E 3758.58
IE 140.95

NEW SITE LIGHT, SEE 6D42-E-131 FIELD LOCATE AS DIRECTED

AREA DRAIN
N 5799.48
E 3557.60
CWS NO. 220, TYP

IE 150.22

12" SS

FOR PROFILE, SEE (E) 6D5-CY-203

ES-JU-004

ES-DU-003

THESE 7 PILES AND CONNECTING SHEETING TO BE LEFT IN PLACE

SEE NOTE 3

ES-PE-002

ES-PE-001

(2335)

E 3726.48

N 5720.54
E 3681.16
CWS NO. 010, 020, TYP

IE 145.5

IE 143.28

N 5704.43
E 3647.80
CWS NO 220

LOCATE & CONNECT TO EXST RTD

IE 141.9

IE 142.0

IE 144.0

IE 145.55

IE 135.0

IE 145.3

IE 145.28

IE 145.0

IE 146.0

IE 148.28

48'-2"

48'-10 1/2"

48'-11 1/4"

18'-0"

77'-3 1/4"

17'-1 1/4"

37'-3 1/4"

48'-8 3/4"

18'-0 1/2"

0 20 40 60
Scale In Feet

N

NOTE:

1. FOR GENERAL YARD PIPING NOTES & LEGEND SEE DRAWING 6D1-G-11.
2. CONTRACTOR TO FIELD VERIFY LOCATIONS OF CONNECTION POINTS SHOWN PRIOR TO FINALIZING PIPING LAYOUT.
3. MINIMUM REQUIREMENTS FOR EXCAVATION EARTH SUPPORT. CONTRACTOR SHALL DESIGN AND INSTALL EXCAVATION SUPPORT SYSTEMS AS REQUIRED FOR PROTECTION OF EXISTING FACILITIES AND IN COMPLIANCE WITH APPLICABLE REGULATIONS. SEE PROJECT SPECIFICATIONS.
4. FOR TYPICAL TRENCH, SEE (2310).
5. FOR PIPE CROSSINGS, SEE (2335).
6. LOCATIONS AND INVERTS OF EXISTING PIPING SHOWN ARE APPROXIMATE, CONTRACTOR SHALL VERIFY LOCATION AND INVERT OF ALL EXISTING PIPES IMPACTING NEW WORK.
7. ALL UTILITIES ARE TO REMAIN IN SERVICE THROUGHOUT THE PROJECT.
8. CONTRACTOR SHALL LOCATE AND CONNECT TO EXISTING UTILITIES AS SHOWN. REMOVE ALL PLUGS, CAPS, & BLIND FLANGES AS REQUIRED TO MAKE CONNECTION.
9. CONTRACTOR SHALL PROVIDE PLATING AS REQUIRED TO PROTECT EXISTING PIPES FROM SURFACE LOADS. NO CRANES OR HEAVY LOADS ARE PERMITTED OVER EX 60" SE OR 72" PE PIPES
10. SEE 6D42-M-131 FOR ADDITIONAL DETAILS.
11. EXISTING ELECTRICAL DUCT BANKS NOT SHOWN FOR CLARITY. CONTRACTOR SHALL LOCATE ALL EXISTING UTILITIES PRIOR TO BEGINNING OF WORK.

KEY MAP

RECORD DRAWINGS

Revisions Drawn By _____ Date 10/08

THESE RECORD DRAWINGS HAVE BEEN PREPARED, IN PART, ON THE BASIS OF INFORMATION COMPILED BY OTHERS. THEY ARE NOT INTENDED TO REPRESENT IN DETAIL THE EXACT LOCATION, TYPE OF COMPONENT NOR MANNER OF CONSTRUCTION. THE ENGINEER WILL NOT BE RESPONSIBLE FOR ANY ERRORS OR OMISSIONS WHICH HAVE BEEN INCORPORATED INTO THE RECORD DRAWINGS.

THIS DOCUMENT, AND THE IDEAS AND DESIGNS INCORPORATED HEREIN, AS AN INSTRUMENT OF PROFESSIONAL SERVICE, IS THE PROPERTY OF CH2M HILL AND IS NOT TO BE USED, IN WHOLE OR IN PART, FOR ANY OTHER PROJECT WITHOUT THE WRITTEN AUTHORIZATION OF CH2MHILL. ©CH2M HILL

REUSE OF DOCUMENTS:

FOR SIGNATURES AND SEALS REFER TO ORIGINAL DRAWINGS DATED FEBRUARY 2007

DSGN TB PERIMON						VERIFY SCALE	CH2MHILL
DR LG McCALL						BAR IS ONE INCH ON ORIGINAL DRAWING. 0 1" IF NOT ONE INCH ON THIS SHEET, ADJUST SCALES ACCORDINGLY.	
CHK WB WAGNER	1	10/08	RECORD DRAWINGS	XXX	JEG		
APVD JE GRIFFITHS		1/08	SITE WORK REVISION	DAR	JEG		
	NO.	DATE	REVISION	BY	APVD		

ROCK CREEK FACILITY
PHASE 6D
SECONDARY CLARIFIER NO. 10

CLEAN WATER SERVICES
WASHINGTON COUNTY, OREGON

CIVIL

YARD PIPING PLAN - SOUTH

SHEET	34
DWG	6D5-CY-101
DATE	OCTOBER 2008
PROJ	351947.SC

FILENAME: r6d5cy101d.dgn PLOT DATE: 28-OCT-2008 PLOT TIME: 16:34:14

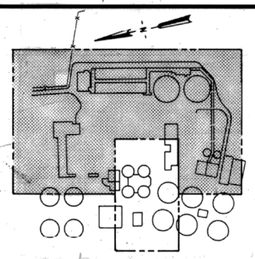

KEY PLAN

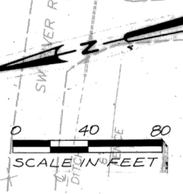

NOTE:
FOR NOTES SEE DWG 1-C-11

YARD PIPING COORDINATE TABLE

MANHOLE	COORDINATES	
MH-B6	N6479.63	E3137.60
MH-B7	N6457.96	E3237.27
MH-D1	N6348.06	E3554.58
MH-D2	N6190.48	E3514.90
MH-D3	N6138.85	E3496.75
MH-D4	N6366.74	E3554.13
MH-E1	N6100.0	E3423.0
MH-E2	N5992.0	E3372.0
MH-E3	N5799.0	E3345.0
*MH-F1	N6488.0	E3540.0

CATCH BASIN	COORDINATES	
CB-E1	N6194.0	E3487.0
CB-E2	N6100.0	E3474.0
CB-E3	N6113.0	E3384.0
CB-E4		
CB-E5	SEE GRADING PLANS FOR LOCATION	
CB-E6		
CB-C9		
CB-C10		
CB-F1	N6555.0	E3650.0

ANGLE POINT	COORDINATES	
1	N6489.96	E3160.69
2	N6407.09	E3541.78
3	N6419.37	E3563.43
4	N6413.22	E3587.67
5	N6107.07	E3493.90
6	N6073.88	E3438.37
7	N6097.96	E3486.45
8	N6072.31	E3443.53
9	N5995.66	E3424.34
10	N5989.59	E3427.97
11	N5951.42	E3454.81
12	N5940.10	E3435.87

*FIELD VERIFY

RECORD DRAWINGS

Revisions Drawn by K.J. RITTER Date 1-92

THESE RECORD DRAWINGS HAVE BEEN PREPARED, IN PART, ON THE BASIS OF INFORMATION COMPILED BY OTHERS. THEY ARE NOT INTENDED TO REPRESENT IN DETAIL THE EXACT LOCATION, TYPE OF COMPONENT NOR MANNER OF CONSTRUCTION. THE ENGINEER WILL NOT BE RESPONSIBLE FOR ANY ERRORS OR OMISSIONS WHICH HAVE BEEN INCORPORATED INTO THE RECORD DRAWINGS.

REGISTERED PROFESSIONAL ENGINEER 9299 OREGON July 22, 1977 ROBERT M. BRACKEN

CH2M HILL

DSGN	D. PETERSON			
DR	R. BEYER			
CHK	J. DORAN			
APVD	M. BRACKEN			
NO.	DATE	REVISION	BY	APVD
	5/91	RECORD DRAWINGS	JBL	RMB
2	5/91	CLARIFICATIONS CL-28, 112, 159, 105A	JBL	RMB
1	5/19/87	ADDENDUM NO.1	JBL	RMB
0	10/6/88	SLUDGE THICKENING CHANGE ORDER	WBWK	MEBN

REUSE OF DOCUMENTS

THIS DOCUMENT, AND THE IDEAS AND DESIGNS INCORPORATED HEREIN, AS AN INSTRUMENT OF PROFESSIONAL SERVICE, IS THE PROPERTY OF CH2M HILL AND IS NOT TO BE USED, IN WHOLE OR IN PART, FOR ANY OTHER PROJECT WITHOUT THE WRITTEN AUTHORIZATION OF CH2M HILL.

©CH2M HILL

VERIFY SCALES

BAR IS ONE INCH ON ORIGINAL DRAWING.
0 1"
IF NOT ONE INCH ON THIS SHEET, ADJUST SCALES ACCORDINGLY.

ROCK CREEK
ADVANCED WASTEWATER TREATMENT PLANT
UNIFIED SEWERAGE AGENCY
WASHINGTON COUNTY, OREGON

PHASE 1 EXPANSION
SLUDGE THICKENING CHANGE ORDER
CIVIL
YARD PIPING

SHEET	20
DWG NO.	1-C-10
DATE	OCT, 1988
PROJ NO.	P21262.B1

OVERLAY IDENTIFICATION | COMPOSITE | OVERLAY | SCREEN | FORMAT | FILM XE | PRINTED | DESIGNED BY | DRAWN BY | CHECKED BY | CONTRACT | PROJ NO.
RC5-BT | I-C-10 | RC5-NS | S | RC5-NJR | RC5-EP | S

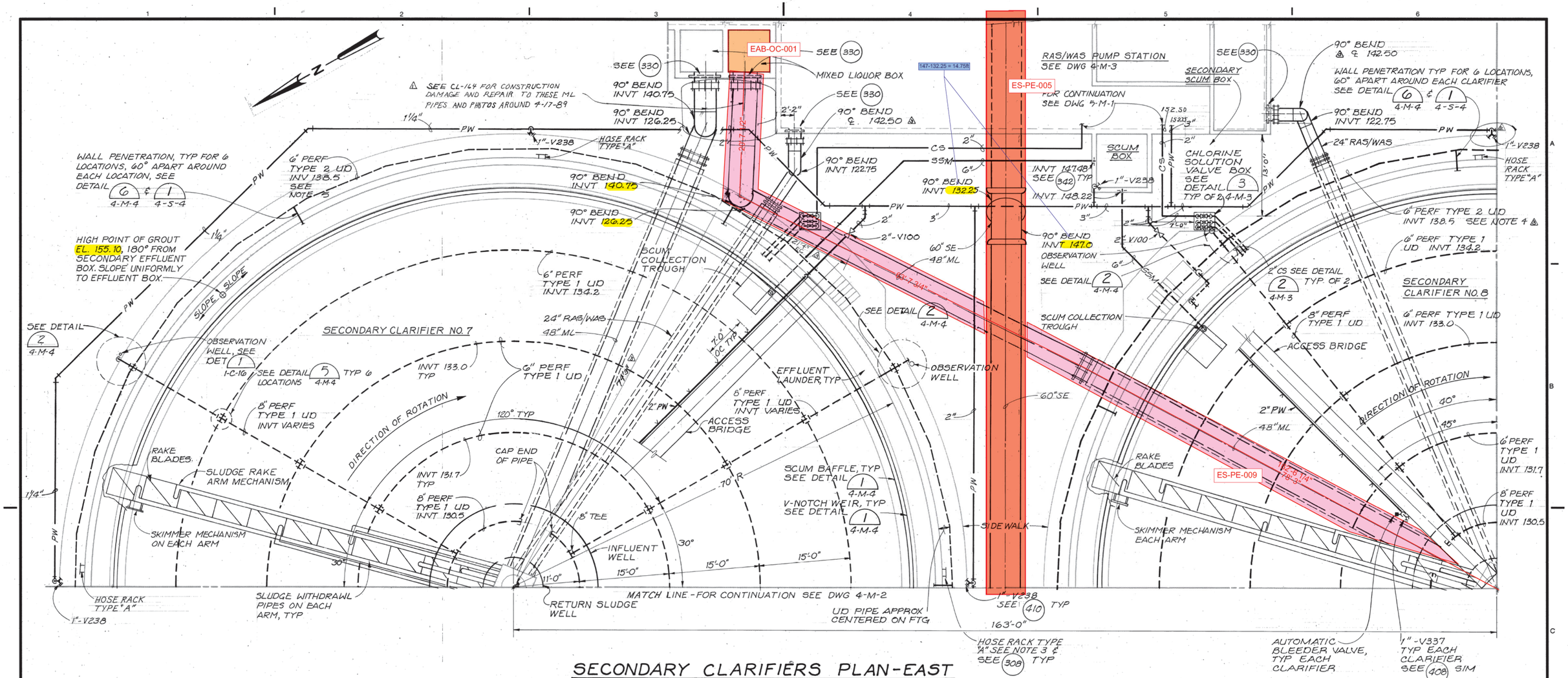
EAB-OC-001
ES-PE-005
ES-PE-009
147-132.25 = 14.75ft
SECONDARY CLARIFIER NO. 7
SECONDARY CLARIFIER NO. 8
SECONDARY SCUM BOX
SCUM BOX
CHLORINE SOLUTION VALVE BOX
RAS/WAS PUMP STATION
SEE DWG 4-M-3
FOR CONTINUATION SEE DWG 5-M-1
MIXED LIQUOR BOX
SCUM COLLECTION TROUGH
ACCESS BRIDGE
SKIMMER MECHANISM ON EACH ARM
RAKE BLADES
SLUDGE RAKE ARM MECHANISM
SLUDGE WITHDRAWL PIPES ON EACH ARM, TYP
RETURN SLUDGE WELL
INFLUENT WELL
OBSERVATION WELL
EFFLUENT LAUNDER, TYP
SCUM BAFFLE, TYP SEE DETAIL 1 4-M-4
V-NOTCH WEIR, TYP SEE DETAIL 1 4-M-4
DIRECTION OF ROTATION
MATCH LINE - FOR CONTINUATION SEE DWG 4-M-2
UD PIPE APPROX CENTERED ON FTG
SIDE WALK
HOSE RACK TYPE "A"
HOSE RACK TYPE "A" SEE NOTE 3 & SEE 308 TYP
AUTOMATIC BLEEDER VALVE, TYP EACH CLARIFIER
1"-V337 TYP EACH CLARIFIER SEE 408 SIM
WALL PENETRATION, TYP FOR 6 LOCATIONS, 60° APART AROUND EACH LOCATION, SEE DETAIL 6 4-M-4 & 1 4-S-4
HIGH POINT OF GROUT EL. 155.10, 180° FROM SECONDARY EFFLUENT BOX. SLOPE UNIFORMLY TO EFFLUENT BOX.
SEE DETAIL 2 4-M-4
OBSERVATION WELL, SEE DET 1 1-C-16
SEE DETAIL 5 4-M-4 TYP 6 LOCATIONS
6" PERF TYPE 2 UD INV 138.5 SEE NOTE 5
6" PERF TYPE 1 UD INV 134.2
6" PERF TYPE 1 UD INV 133.0
8" PERF TYPE 1 UD INVT VARIES
8" PERF TYPE 1 UD INVT 131.7 TYP
8" PERF TYPE 1 UD INVT 130.5
6" PERF TYPE 1 UD INVT VARIES
6" PERF TYPE 1 UD INVT 131.7
8" PERF TYPE 1 UD INVT 130.5
6" PERF TYPE 2 UD INVT 138.5 SEE NOTE 4
90° BEND INVT 140.75
90° BEND INVT 126.25
90° BEND INVT 122.75
90° BEND INVT 122.75
90° BEND INVT 132.25
90° BEND INVT 147.0
90° BEND ℄ 142.50
24" RAS/WAS
48" ML
60" SE
2" CS SEE DETAIL 2 4-M-3 TYP OF 2
3" PERF TYPE 1 UD
ACCESS BRIDGE
2" PW
1"-V238
2"-V100
1"-V238 SEE 410 TYP
1"-V238 SEE 342 TYP
SLOPE @ SLOPE
1¼" PW
7'-0" OC TYP
70' R
8" TEE
30°
40°
45°
120° TYP
CAP END OF PIPE
11'-0"
15'-0"
163'-0"
13'-0"
7'-0"
SEE 330
SEE 330
SEE 330

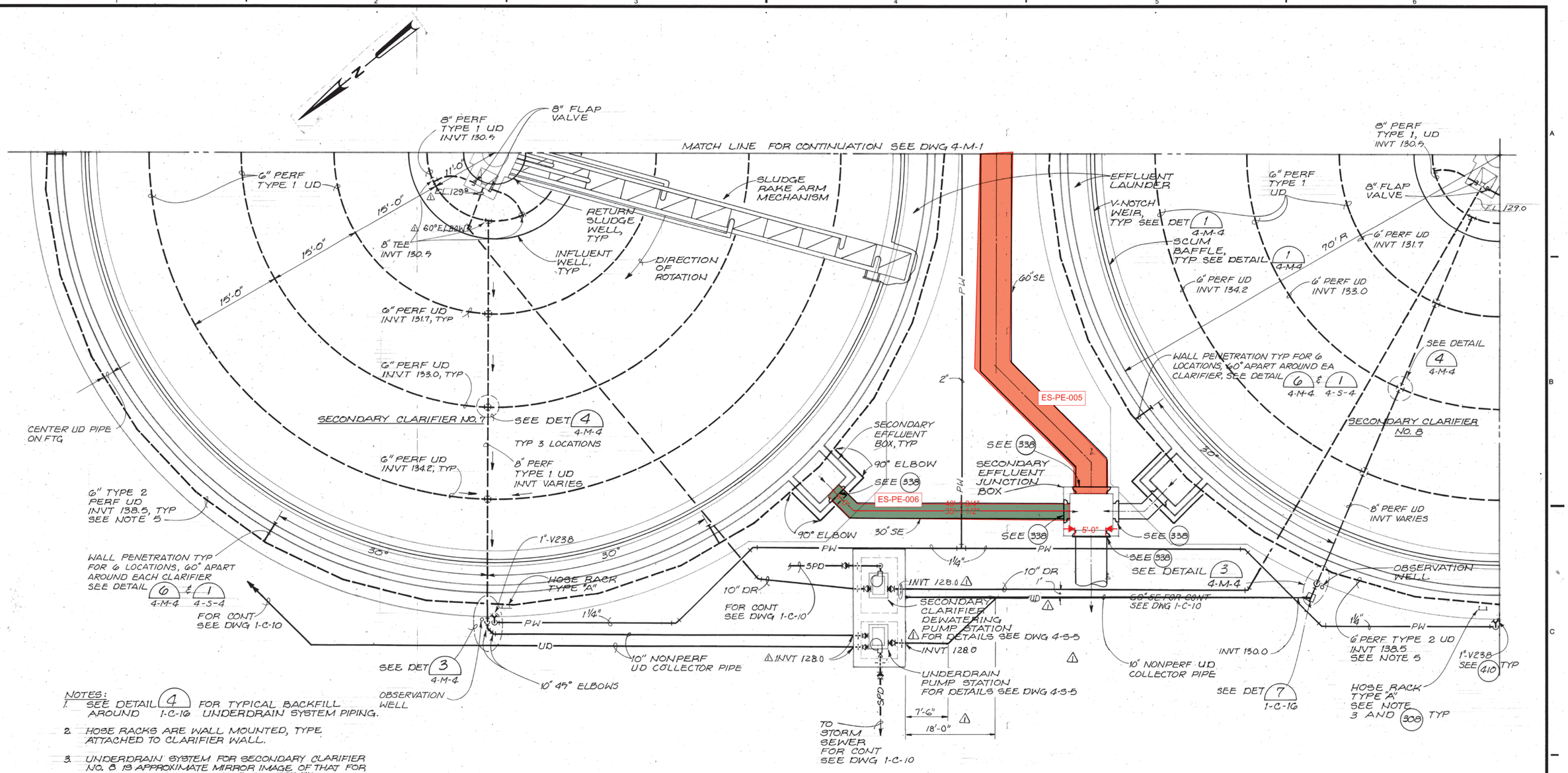

NOTES:

1. SEE DETAIL 4 FOR TYPICAL BACKFILL AROUND 1-C-16 UNDERDRAIN SYSTEM PIPING.
2. HOSE RACKS ARE WALL MOUNTED, TYPE ATTACHED TO CLARIFIER WALL.
3. UNDERDRAIN SYSTEM FOR SECONDARY CLARIFIER NO. 8 IS APPROXIMATE MIRROR IMAGE OF THAT FOR SECONDARY CLARIFIER NO. 7, EXCEPT THAT UD PIPING FOR CLARIFIER NO. 8 IS ROTATED CLOCKWISE 20° TO AVOID CONFLICT OF 8" UD COLLECTOR WITH 48" M.L PIPE. △
4. PERIMETER UD LATERAL (INVT 138.5) TO CONSIST OF STRAIGHT SEGMENTS (APPROX 14" LONG) AND 11° BEND FITTINGS. CONTRACTOR TO VERIFY SEGMENT AND FITTING REQUIREMENTS TO RESULT IN UD BEING APPROX CENTERED ON WALL FOOTING.

SECONDARY CLARIFIERS PLAN - WEST

1/8" = 1'-0"

RECORD DRAWINGS

Revisions Drawn by E. KUEHN Date 8-91

THESE RECORD DRAWINGS HAVE BEEN PREPARED, IN PART, ON THE BASIS OF INFORMATION COMPILED BY OTHERS. THEY ARE NOT INTENDED TO REPRESENT IN DETAIL THE EXACT LOCATION, TYPE OF COMPONENT NOR MANNER OF CONSTRUCTION. THE ENGINEER WILL NOT BE RESPONSIBLE FOR ANY ERRORS OR OMISSIONS WHICH HAVE BEEN INCORPORATED INTO THE RECORD DRAWINGS.

REGISTERED PROFESSIONAL ENGINEER 9299 OREGON JAN. 22, 1977 ROBERT M. BRACKEN

CH2M HILL

DSGN	J.R. TRACY, D. TANIGUCHI-DENNIS
DR	I.M. SCHLABACH
CHK	S. GIBBS
APVD	M. BRACKEN

NO.	DATE	REVISION	BY	APVD
1	8-91	RECORD DRAWINGS	JBL	RMB

REUSE OF DOCUMENTS

THIS DOCUMENT, AND THE IDEAS AND DESIGNS INCORPORATED HEREIN, AS AN INSTRUMENT OF PROFESSIONAL SERVICE, IS THE PROPERTY OF CH2M HILL AND IS NOT TO BE USED, IN WHOLE OR IN PART, FOR ANY OTHER PROJECT WITHOUT THE WRITTEN AUTHORIZATION OF CH2M HILL.

©CH2M HILL

VERIFY SCALES

BAR IS ONE INCH ON ORIGINAL DRAWING. 0 1"

IF NOT ONE INCH ON THIS SHEET, ADJUST SCALES ACCORDINGLY.

ROCK CREEK
ADVANCED WASTEWATER TREATMENT PLANT
UNIFIED SEWERAGE AGENCY
WASHINGTON COUNTY, OREGON

PHASE 1 EXPANSION
SECONDARY CLARIFIERS
MECHANICAL — PLAN

SHEET	151
DWG NO.	4-M-2
DATE	APRIL, 1987
PROJ NO.	P21262.B1

OVERLAY IDENTIFICATION | PROJ NO. | CONTRACT
FORMAT 22340 | 4-M-2 | 4-M-2 | 4-M-2.1 | 4-M-2.1
COMPOSITE | 4-2 | 4-M-2
OVERLAY | 4-2 | S
SCREEN
FILM KE
PRINTED 2
DESIGNED BY | DRAWN BY | CHECKED BY

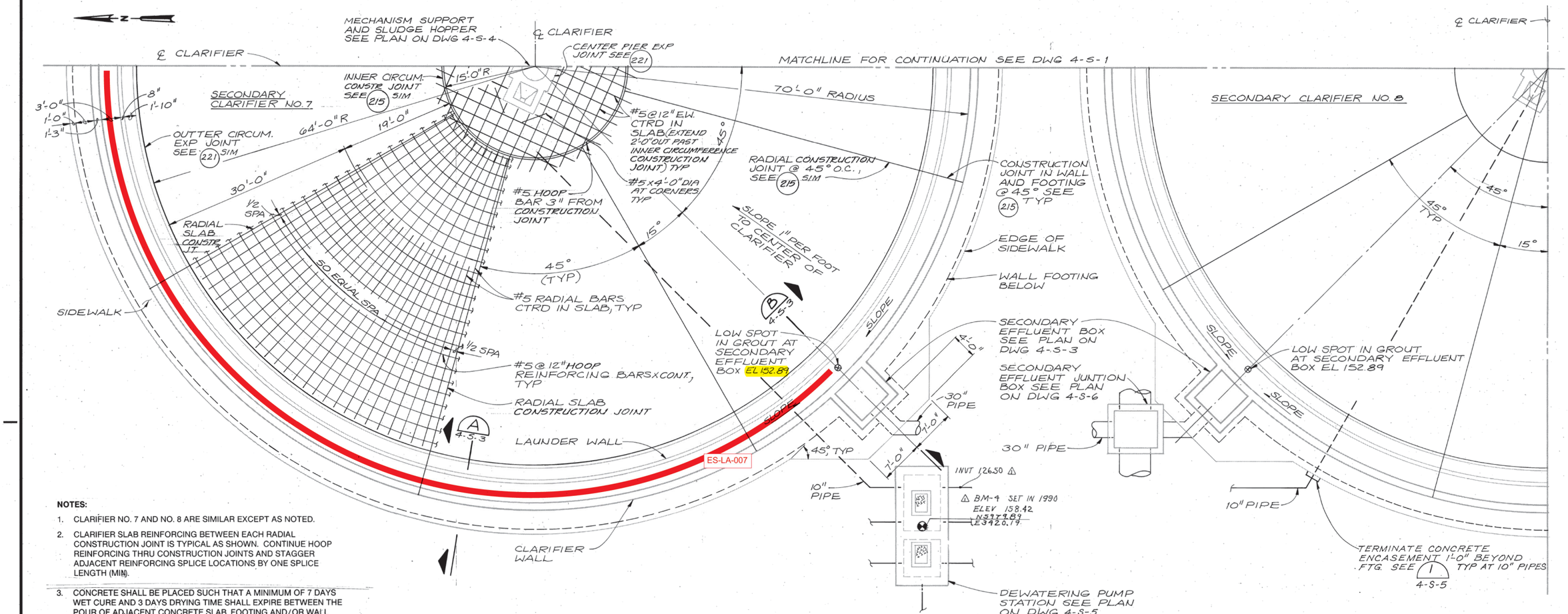

ES-LA-007

NOTES:

1. CLARIFIER NO. 7 AND NO. 8 ARE SIMILAR EXCEPT AS NOTED.
2. CLARIFIER SLAB REINFORCING BETWEEN EACH RADIAL CONSTRUCTION JOINT IS TYPICAL AS SHOWN. CONTINUE HOOP REINFORCING THRU CONSTRUCTION JOINTS AND STAGGER ADJACENT REINFORCING SPLICE LOCATIONS BY ONE SPLICE LENGTH (MIN).
3. CONCRETE SHALL BE PLACED SUCH THAT A MINIMUM OF 7 DAYS WET CURE AND 3 DAYS DRYING TIME SHALL EXPIRE BETWEEN THE POUR OF ADJACENT CONCRETE SLAB, FOOTING AND/OR WALL PANELS FORMED BY THE CONSTRUCTION AND/OR EXPANSION JOINTS SHOWN.
4. SEE MECHANICAL DRAWINGS FOR PIPING.
5. FOR UNDERDRAIN SYSTEM SEE DRAWINGS 4-M-1 AND 4-M-2.
6. VERIFY FLAP VALUE LOCATIONS PRIOR TO POURING CONCRETE. SEE DRAWINGS 4-M-1 AND 4-M-2 AND DETAIL 1 4-S-4

SECONDARY CLARIFIERS PLAN - WEST

1/8" = 1'-0"

RECORD DRAWINGS

Revisions Drawn by E.K VUEHN Date 8-91

THESE RECORD DRAWINGS HAVE BEEN PREPARED, IN PART, ON THE BASIS OF INFORMATION COMPILED BY OTHERS. THEY ARE NOT INTENDED TO REPRESENT IN DETAIL THE EXACT LOCATION, TYPE OF COMPONENT NOR MANNER OF CONSTRUCTION. THE ENGINEER WILL NOT BE RESPONSIBLE FOR ANY ERRORS OR OMISSIONS WHICH HAVE BEEN INCORPORATED INTO THE RECORD DRAWINGS.

REGISTERED PROFESSIONAL ENGINEER 11.908 OREGON Dec. 3, 1982 STEVEN E. DOHLEMAN

CH2M HILL

DSGN S.E. DOHLEMAN					
DR L.A. OLSON					
CHK S.M. FREY					
APVD R.M. BRACKEN	△	8-91	RECORD DRAWINGS	STBL	RMB
	NO.	DATE	REVISION	BY	APVD

REUSE OF DOCUMENTS

THIS DOCUMENT, AND THE IDEAS AND DESIGNS INCORPORATED HEREIN, AS AN INSTRUMENT OF PROFESSIONAL SERVICE, IS THE PROPERTY OF CH2M HILL AND IS NOT TO BE USED, IN WHOLE OR IN PART, FOR ANY OTHER PROJECT WITHOUT THE WRITTEN AUTHORIZATION OF CH2M HILL.

©CH2M HILL

VERIFY SCALES

BAR IS ONE INCH ON ORIGINAL DRAWING. 0 1"

IF NOT ONE INCH ON THIS SHEET, ADJUST SCALES ACCORDINGLY.

ROCK CREEK
ADVANCED WASTEWATER TREATMENT PLANT
UNIFIED SEWERAGE AGENCY
WASHINGTON COUNTY, OREGON

PHASE 1 EXPANSION
SECONDARY CLARIFIERS
STRUCTURAL — PLAN

SHEET NO.	149
DWG NO.	4-S-2
DATE	APRIL, 1987
PROJ NO.	P21262.B1

OVERLAY IDENTIFICATION: PROJ NO. / CONTRACT
COMPOSITE: 4-S-2 / OVERLAY: 4-S-2 / SCREEN
FORMAT 4.2 233xMC
FILM KF
PRINTED 2
DESIGNED BY / DRAWN BY / CHECKED BY

LAUNDER LENGTH = 70-1.5FT = 68.5FT*2*PI = 430.4/2 = 215.2FT

WEIR LENGTH = 70-3.66FT = 66.34FT*2*PI = 416.8FT

ES-WE-008

ES-LA-007

1" CHAMFER

EL 159.00

1'-3"

4'-0"

1" DEEP X 3" WIDE ± CORRUGATIONS

4" SIDEWALK W/ #3@15" E.W., CTRD

1/2 PIF

WEIR & SCUM BAFFLE NOT SHOWN

EL 155.83

#5@6" HOOP BARS

#5@12" CTR IN WALL

EL 152.72

GROUT EL VARIES SEE PLAN

EL 153.50

#7@12"

#5@12" HOOP BARS

#5@12"

#9@6" HOOPS E.F. OF WALL

3'-0" @ 1'-10"

#7@12"

140'-0"

#9@12"

#8@6" EF

8'-0"

EL 141.50

213

FOOTING DRAIN SEE 4-M-1 & 4-M-2

#9@12"

#8@6" EF OF WALL

T.O. GROUT EL 138.08 (TYP AT WALL)

2" GROUT

SLOPE 12

EL 137.91

1'-8"

#10@12"

#9 @6" HOOP BARS, TYP

SEE PLAN ON DWG 4-S-2 FOR REINF

DRAIN ROCK AS SPECIFIED, TYP

SLAB EXP JT SIM TO 221

3'-0" 1'-3" 6'-0" 6" 10'-9"

NOTES:

1. STAGGER ADJACENT REINFORCING SPLICE LOCATIONS FOR ALL HOOP BARS BY ONE SPLICE LENGTH (MIN)

2. MEASURE ALL RADIAL REINF SPACINGS AT OUTTER MOST POINT OF REINF

3. PLACE DRAIN ROCK UNDER ALL CLARIFIER SLABS AND FOOTINGS AS REQUIRED.

TYPICAL WALL SECTION (A)

3/8"=1'-0"

4-S-1
4-S-2

8'-5"

1'-2" 6'-0" 1'-3"

EL 159.00

4'-0"

2'-6"

4" SIDEWALK W/ #3@15" EW CTRD

#6@12"

4-1 1/2" I.D. SCH 40 AL PIPE W/ WALL FLANGES AT ENDS SEE 262 SIM

FILL CONC EL TO MATCH PIPE INVERT

℄ 30" DIA PIPE EL 150.75

EL 149.75 (3-EDGES)

SLOPE

ADDITIONAL REINF @ OPNG SEE 209 TYP

CONC FILL SLOPE TO PIPE INVERT

FOR HORIZ REINF SEE PLAN

COMPACTED GRANULAR FILL

1'-0" TYP

#6 DOWELS @ 12" O.C. EF

213 TYP

EL 137.91

1'-8"

5-#8 T&B

#5 ⊓ @12" OVER WALL OPNG

3 ADD'L #9 X 20'-0" EA FACE (6 TOTAL), CTRD ON WALL OPNG, ALTN W/ TYP WALL HOOPS

LAUNDER SEE (A) FOR REINF EXCEPT AS NOTED

#7@12" @ OPNG

EL 152.72

EL 148.50

3-ADDITIONAL #9 x 20'-0" EA FACE (6 TOTAL), ALT W/ TYP WALL HOOPS, CTRD ON WALL OPNG

#5 ⊓ @12" EW T&B

FOR WALL & FOUNDATION REINF SEE (A)

EXTEND CLARIFIER WALL FOUNDATION @ EFFLUENT BOX

EFFLUENT BOX SECTION (B)

3/8"=1'-0"

4-S-2

8'-4"

1'-2" 6'-0" 1'-2"

#6@12"

#6@12" TYP

#6@12" TYP

#6@12", TYP

WALL HOOPS W/ 90° STD HOOK @ WALL

CLARIFIER WALL FOR REINF (A)

LAUNDER WALL SEE (A) FOR REINF

149.75

149.75

SLOPE

149.75

152.89

SLOPE

SLOPE

152.89

B

EFFLUENT BOX PLAN

RECORD DRAWINGS

Revisions Drawn by E.KUEHN Date 8-91

THESE RECORD DRAWINGS HAVE BEEN PREPARED, IN PART, ON THE BASIS OF INFORMATION COMPILED BY OTHERS. THEY ARE NOT INTENDED TO REPRESENT IN DETAIL THE EXACT LOCATION, TYPE OF COMPONENT NOR MANNER OF CONSTRUCTION. THE ENGINEER WILL NOT BE RESPONSIBLE FOR ANY ERRORS OR OMISSIONS WHICH HAVE BEEN INCORPORATED INTO THE RECORD DRAWINGS.

REGISTERED PROFESSIONAL ENGINEER 11.908 OREGON Dec. 3, 1982 STEVEN E. DOHLEMAN

Steven E. Dohleman

CH2M HILL

DSGN S.E. DOHLEMAN
DR L.A. OLSON
CHK S.M. FREY
APVD R.M. BRACKEN

NO.	DATE	REVISION	BY	APVD
1	8-91	RECORD DRAWINGS	JBL	RMB

REUSE OF DOCUMENTS

THIS DOCUMENT, AND THE IDEAS AND DESIGNS INCORPORATED HEREIN, AS AN INSTRUMENT OF PROFESSIONAL SERVICE, IS THE PROPERTY OF CH2M HILL AND IS NOT TO BE USED, IN WHOLE OR IN PART, FOR ANY OTHER PROJECT WITHOUT THE WRITTEN AUTHORIZATION OF CH2M HILL.

©CH2M HILL

VERIFY SCALES

BAR IS ONE INCH ON ORIGINAL DRAWING. 0 1"

IF NOT ONE INCH ON THIS SHEET, ADJUST SCALES ACCORDINGLY.

ROCK CREEK
ADVANCED WASTEWATER TREATMENT PLANT
UNIFIED SEWERAGE AGENCY
WASHINGTON COUNTY, OREGON

P1 PHASE 1 EXPANSION
SECONDARY CLARIFIERS
STRUCTURAL – PLAN AND SECTIONS

SHEET	152
DWG NO.	4-S-3
DATE	APRIL, 1987
PROJ NO.	P21262.B1

P21262.B1 96

Rock Creek

PHASE 1 EXPANSION
SECONDARY CLARIFIERS
STRUCTURAL – SECTIONS

P21262.B1

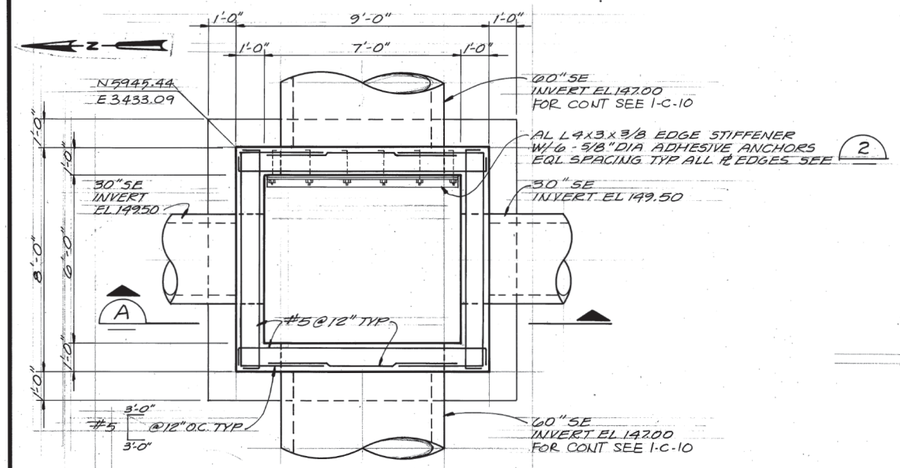

PLAN

SECONDARY EFFLUENT BOX

3/8"=1'-0"

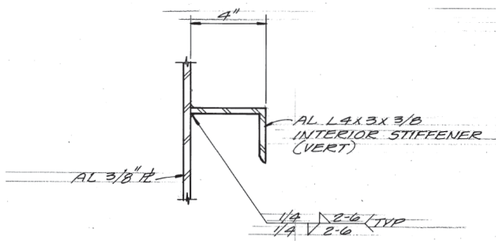

STIFFENER DETAIL 1

3"=1'-0"

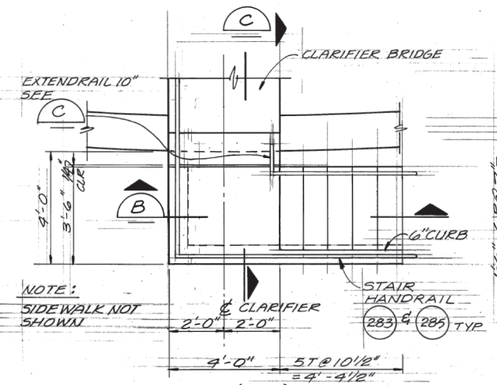

DETAIL 3

3/8"=1'-0" 4-S-1

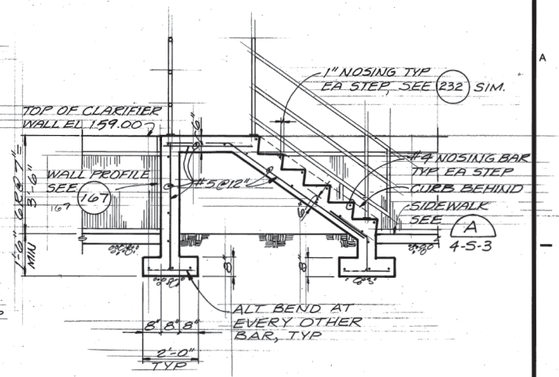

SECTION B

3/8"=1'-0"

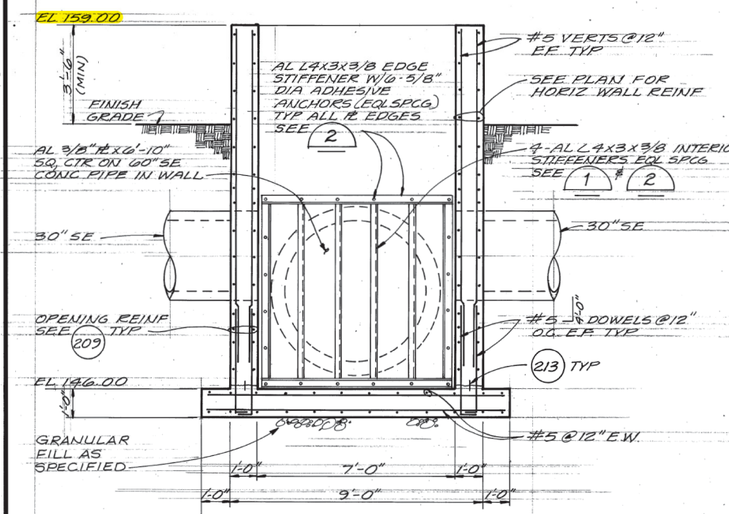

SECTION A

3/8"=1'-0"

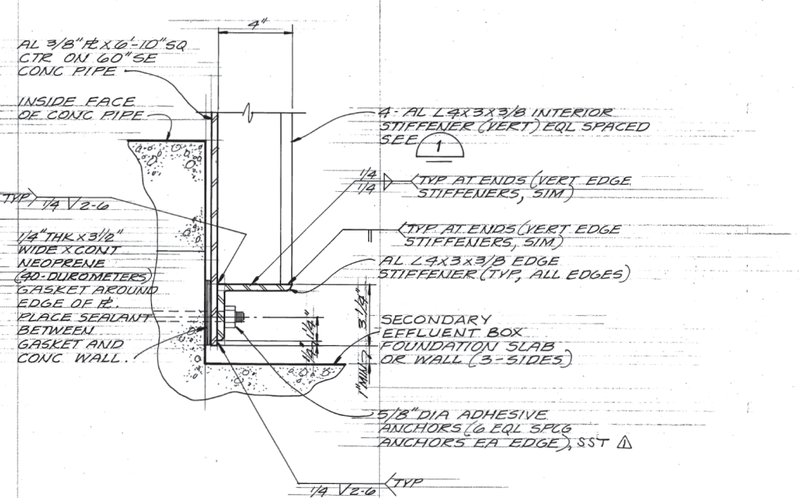

PLATE EDGE DETAIL 2

3"=1'-0"

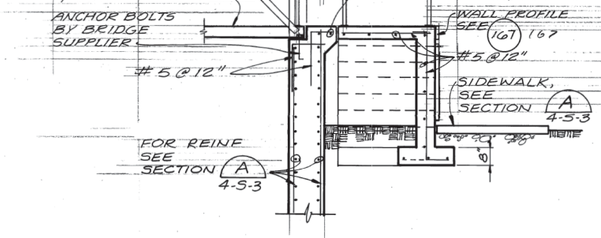

SECTION C

3/8"=1'-0"

RECORD DRAWINGS

Revisions Drawn by E. KUEHN Date 8-91

THESE RECORD DRAWINGS HAVE BEEN PREPARED, IN PART, ON THE BASIS OF INFORMATION COMPILED BY OTHERS. THEY ARE NOT INTENDED TO REPRESENT IN DETAIL THE EXACT LOCATION, TYPE OF COMPONENT NOR MANNER OF CONSTRUCTION. THE ENGINEER WILL NOT BE RESPONSIBLE FOR ANY ERRORS OR OMISSIONS WHICH HAVE BEEN INCORPORATED INTO THE RECORD DRAWINGS.

REGISTERED PROFESSIONAL ENGINEER 11,908 OREGON Dec. 3, 1982 STEVEN E. DOHLEMAN

CH2M HILL

DSGN S. DOHLEMAN					
DR T.W. MCINTYRE					
CHK S.M. FREY					
APVD R.M. BRACKEN	NO.	DATE	REVISION	BY	APVD
	1	8-91	RECORD DRAWINGS	JBL	RMB

REUSE OF DOCUMENTS

THIS DOCUMENT, AND THE IDEAS AND DESIGNS INCORPORATED HEREIN, AS AN INSTRUMENT OF PROFESSIONAL SERVICE, IS THE PROPERTY OF CH2M HILL AND IS NOT TO BE USED, IN WHOLE OR IN PART, FOR ANY OTHER PROJECT WITHOUT THE WRITTEN AUTHORIZATION OF CH2M HILL.
©CH2M HILL

VERIFY SCALES

BAR IS ONE INCH ON ORIGINAL DRAWING. 0 1"
IF NOT ONE INCH ON THIS SHEET, ADJUST SCALES ACCORDINGLY.

ROCK CREEK
ADVANCED WASTEWATER TREATMENT PLANT
UNIFIED SEWERAGE AGENCY
WASHINGTON COUNTY, OREGON

PHASE 1 EXPANSION
SECONDARY CLARIFIERS

STRUCTURAL — SECONDARY EFFLUENT BOX-PLAN, SECTION AND DETAILS

SHEET	155
DWG NO.	4-S-6
DATE	APRIL, 1987
PROJ NO.	P21262.B1

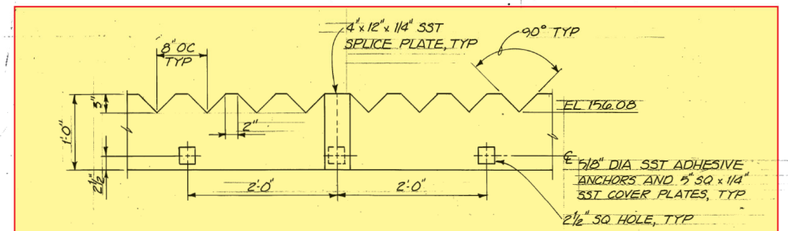

TYPICAL V-NOTCH WEIR PLATE

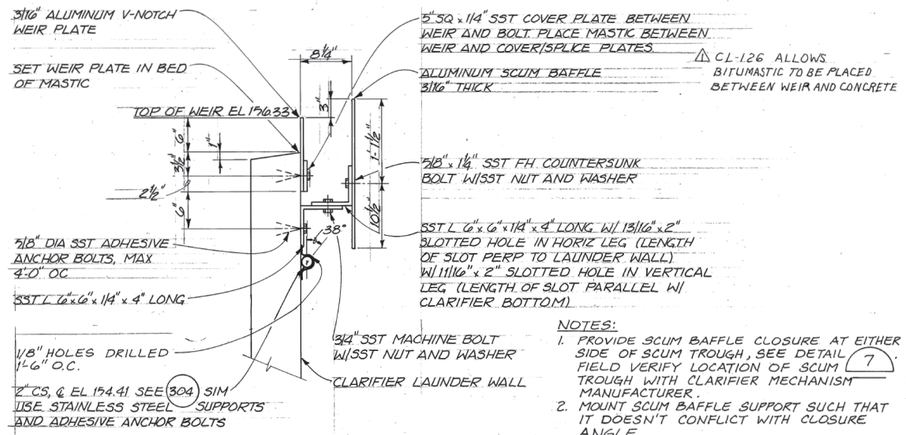

⚠ CL-126 ALLOWS BITUMASTIC TO BE PLACED BETWEEN WEIR AND CONCRETE

NOTES:
1. PROVIDE SCUM BAFFLE CLOSURE AT EITHER SIDE OF SCUM TROUGH, SEE DETAIL 7. FIELD VERIFY LOCATION OF SCUM TROUGH WITH CLARIFIER MECHANISM MANUFACTURER.
2. MOUNT SCUM BAFFLE SUPPORT SUCH THAT IT DOESN'T CONFLICT WITH CLOSURE ANGLE.

WEIR AND SCUM BAFFLE DETAIL 1
1"=1'-0"
4-M-1
4-M-2
3-M-3

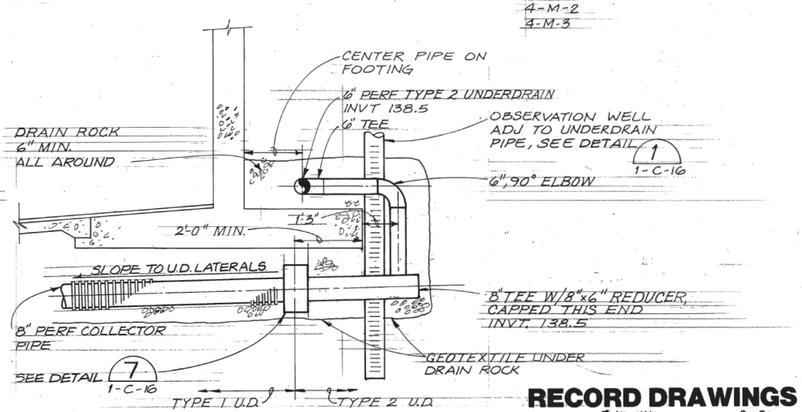

DETAIL 2
NTS
4-M-1

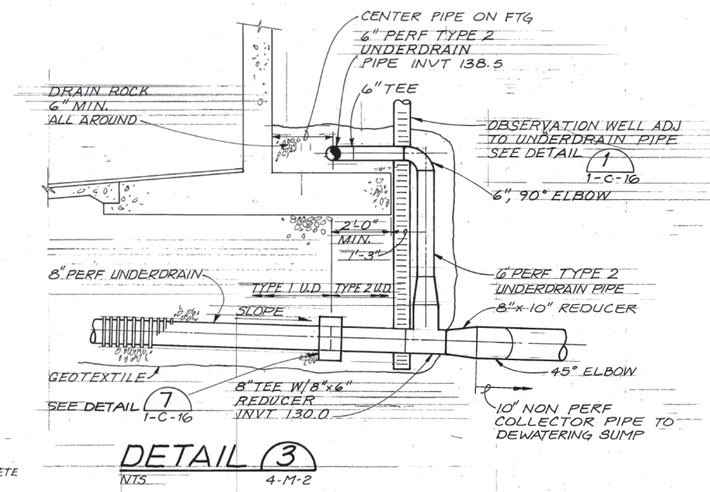

DETAIL 3
NTS
4-M-2

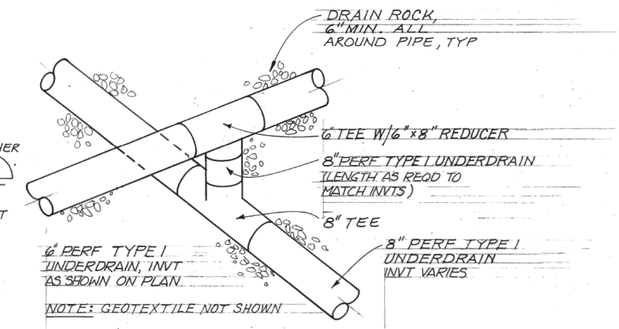

DETAIL 4
NTS
4-M-2

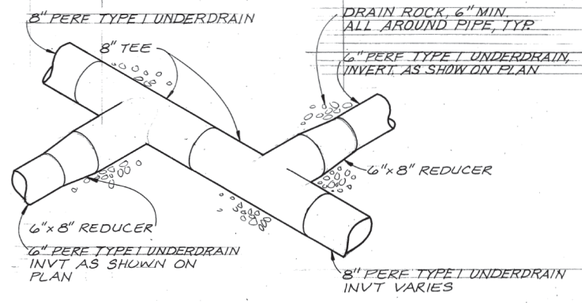

DETAIL 5
NTS
4-M-1
4-M-2

NOTE: SEE STRUCTURAL DWGS FOR DETAILS OF WALL POCKET FOR FLAP VALVE.

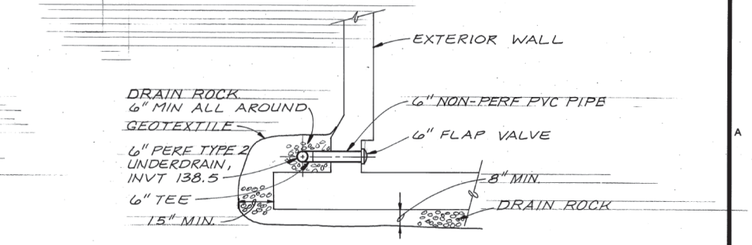

DETAIL 6
NTS
4-M-1
4-M-2

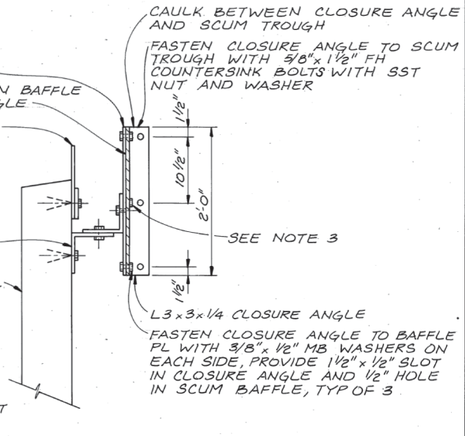

NOTES:
1. SCUM TROUGH NOT SHOWN FOR CLARITY.
2. FOR MOUNTING DETAILS AND DIMENSIONS OF BOTH THE V-NOTCH WEIR AND SCUM BAFFLE SEE DETAIL 1
3. VERIFY LOCATION OF SCUM BAFFLE SUPPORT TO ENSURE THAT IT DOES NOT INTERFERE WITH THE CLOSURE ANGLE FASTENING BOLTS.

SCUM BAFFLE CLOSURE DETAIL 7
1"=1'-0"
4-M-3
4-M-5

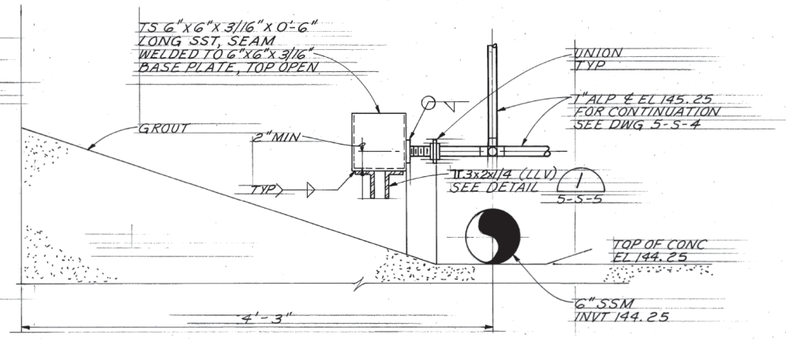

DETAIL 8
1½"=1'-0"
5-5-5
5-5-4

RECORD DRAWINGS

Revisions Drawn by E. KUEHN Date 8-91

THESE RECORD DRAWINGS HAVE BEEN PREPARED, IN PART, ON THE BASIS OF INFORMATION COMPILED BY OTHERS. THEY ARE NOT INTENDED TO REPRESENT IN DETAIL THE EXACT LOCATION, TYPE OF COMPONENT NOR MANNER OF CONSTRUCTION. THE ENGINEER WILL NOT BE RESPONSIBLE FOR ANY ERRORS OR OMISSIONS WHICH HAVE BEEN INCORPORATED INTO THE RECORD DRAWINGS.

REGISTERED PROFESSIONAL ENGINEER 9299 OREGON July 22, 1977 ROBERT M. BRACKEN

CH2M HILL

DSGN D. TANIGUCHI-DENNIS
DR A. DURLEY
CHK S. GIBBS
APVD M. BRACKEN

NO.	DATE	REVISION	BY	APVD
⚠	8-91	RECORD DRAWINGS	TBL	RMB

REUSE OF DOCUMENTS
THIS DOCUMENT, AND THE IDEAS AND DESIGNS INCORPORATED HEREIN, AS AN INSTRUMENT OF PROFESSIONAL SERVICE, IS THE PROPERTY OF CH2M HILL AND IS NOT TO BE USED, IN WHOLE OR IN PART, FOR ANY OTHER PROJECT WITHOUT THE WRITTEN AUTHORIZATION OF CH2M HILL.
©CH2M HILL

VERIFY SCALES
BAR IS ONE INCH ON ORIGINAL DRAWING. 0 1"
IF NOT ONE INCH ON THIS SHEET, ADJUST SCALES ACCORDINGLY.

ROCK CREEK
ADVANCED WASTEWATER TREATMENT PLANT
UNIFIED SEWERAGE AGENCY
WASHINGTON COUNTY, OREGON

PHASE 1 EXPANSION
SECONDARY CLARIFIERS
MECHANICAL — DETAILS

SHEET NO.	157
DWG NO.	4-M-4
DATE	APRIL, 1987
PROJ NO.	P21262.B1

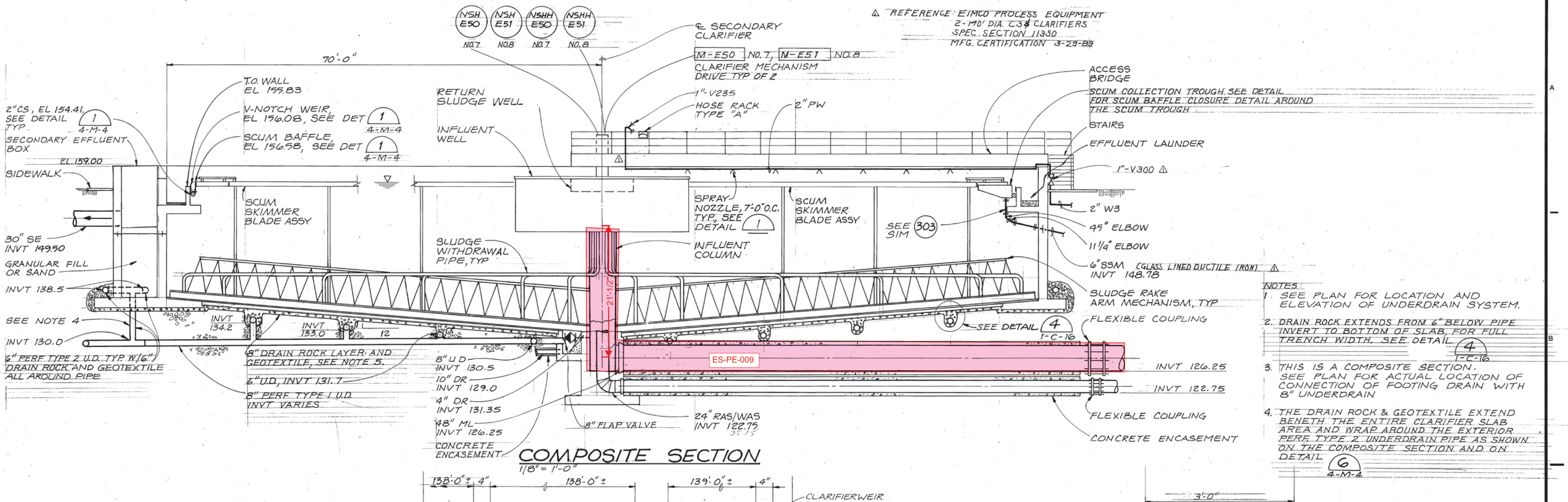

COMPOSITE SECTION

1/8" = 1'-0"

△ REFERENCE EIMCO PROCESS EQUIPMENT
2-170' DIA. C3S CLARIFIERS
SPEC. SECTION 11350
MFG. CERTIFICATION 3-29-89

NOTES:
1. SEE PLAN FOR LOCATION AND ELEVATION OF UNDERDRAIN SYSTEM.
2. DRAIN ROCK EXTENDS FROM 6" BELOW PIPE INVERT TO BOTTOM OF SLAB, FOR FULL TRENCH WIDTH. SEE DETAIL 4 1-C-16
3. THIS IS A COMPOSITE SECTION. SEE PLAN FOR ACTUAL LOCATION OF CONNECTION OF FOOTING DRAIN WITH 8" UNDERDRAIN
4. THE DRAIN ROCK & GEOTEXTILE EXTEND BENETH THE ENTIRE CLARIFIER SLAB AREA AND WRAP AROUND THE EXTERIOR PERF. TYPE 2 UNDERDRAIN PIPE AS SHOWN ON THE COMPOSITE SECTION AND ON DETAIL 6 4-M-4

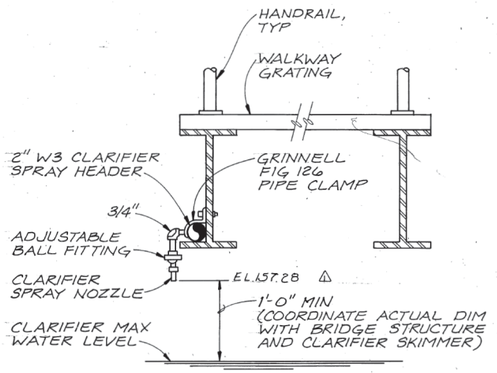

DETAIL 1

NTS

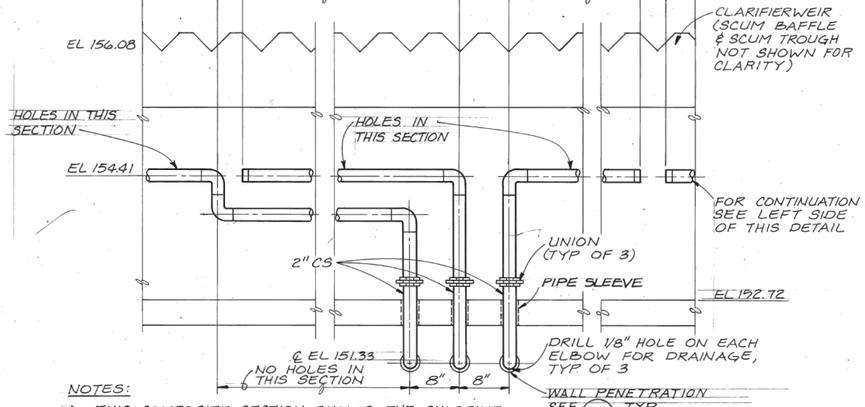

NOTES:
1. THIS COMPOSITE SECTION SHOWS THE CHLORINE SOLUTION DIFFUSER PIPING ON THE INSIDE CLARIFIER LAUNDER WALL.
2. SUPPORT CS PIPE AT 5'-0" ON CENTER AND SEE (303).
3. SHOP BEND PIPE TO MATCH CLARIFIER LAUNDER WALL CURVATURE.
4. VERIFY LOCATION, DIMENSIONS, PIPING AND SUPPORT LOCATIONS FOR SCUM TROUGH WITH CLARIFIER MECHANISM MANUFACTURER AND ROUTE CS PIPING SO THAT IT DOES NOT INTERFERE.
5. FOR HOLE LOCATION SEE DETAIL 1 4-M-4

DETAIL 2

1"=1'-0" 4-M-1

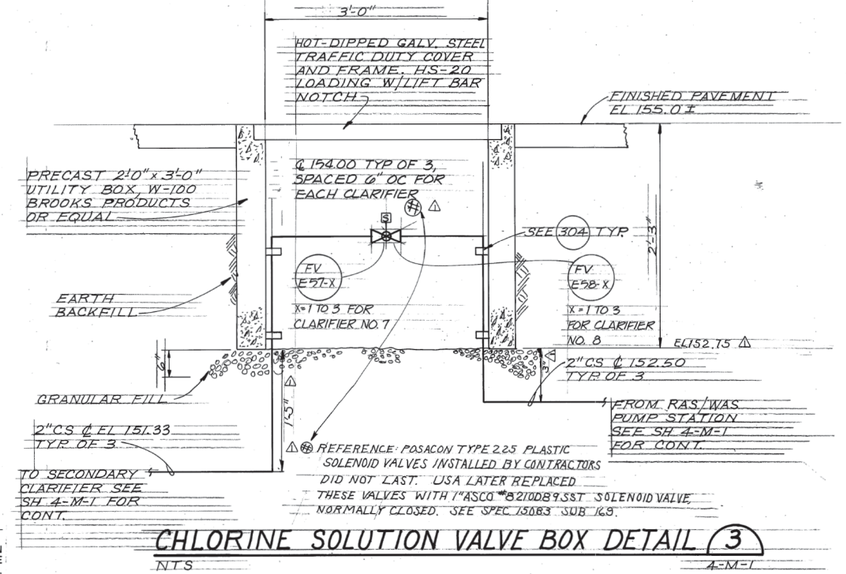

CHLORINE SOLUTION VALVE BOX DETAIL 3

NTS 4-M-1

RECORD DRAWINGS

Revisions Drawn by E. KUEHN Date 8-91

THESE RECORD DRAWINGS HAVE BEEN PREPARED, IN PART, ON THE BASIS OF INFORMATION COMPILED BY OTHERS. THEY ARE NOT INTENDED TO REPRESENT IN DETAIL THE EXACT LOCATION, TYPE OF COMPONENT NOR MANNER OF CONSTRUCTION. THE ENGINEER WILL NOT BE RESPONSIBLE FOR ANY ERRORS OR OMISSIONS WHICH HAVE BEEN INCORPORATED INTO THE RECORD DRAWINGS.

REGISTERED PROFESSIONAL ENGINEER 9299 OREGON July 22, 1977 ROBERT M. BRACKEN

CH2M HILL

DSGN	D. TANIGUCHI-DENNIS, JERRY TRACY
DR	D. VASCHE
CHK	S. GIBBS
APVD	M. BRACKEN

NO.	DATE	REVISION	BY	APVD
△	8-91	RECORD DRAWINGS	JRE	RMB

REUSE OF DOCUMENTS
THIS DOCUMENT, AND THE IDEAS AND DESIGNS INCORPORATED HEREIN, AS AN INSTRUMENT OF PROFESSIONAL SERVICE, IS THE PROPERTY OF CH2M HILL AND IS NOT TO BE USED, IN WHOLE OR IN PART, FOR ANY OTHER PROJECT WITHOUT THE WRITTEN AUTHORIZATION OF CH2M HILL.
©CH2M HILL

VERIFY SCALES
BAR IS ONE INCH ON ORIGINAL DRAWING. 0 1"
IF NOT ONE INCH ON THIS SHEET, ADJUST SCALES ACCORDINGLY.

ROCK CREEK
ADVANCED WASTEWATER TREATMENT PLANT
UNIFIED SEWERAGE AGENCY
WASHINGTON COUNTY, OREGON

PHASE 1 EXPANSION
SECONDARY CLARIFIERS
MECHANICAL — SECTION AND DETAILS

SHEET	156
DWG NO.	4-M-3
DATE	APRIL, 1987
PROJ NO.	P21262.B1

EAB EAST AERATION BASINS

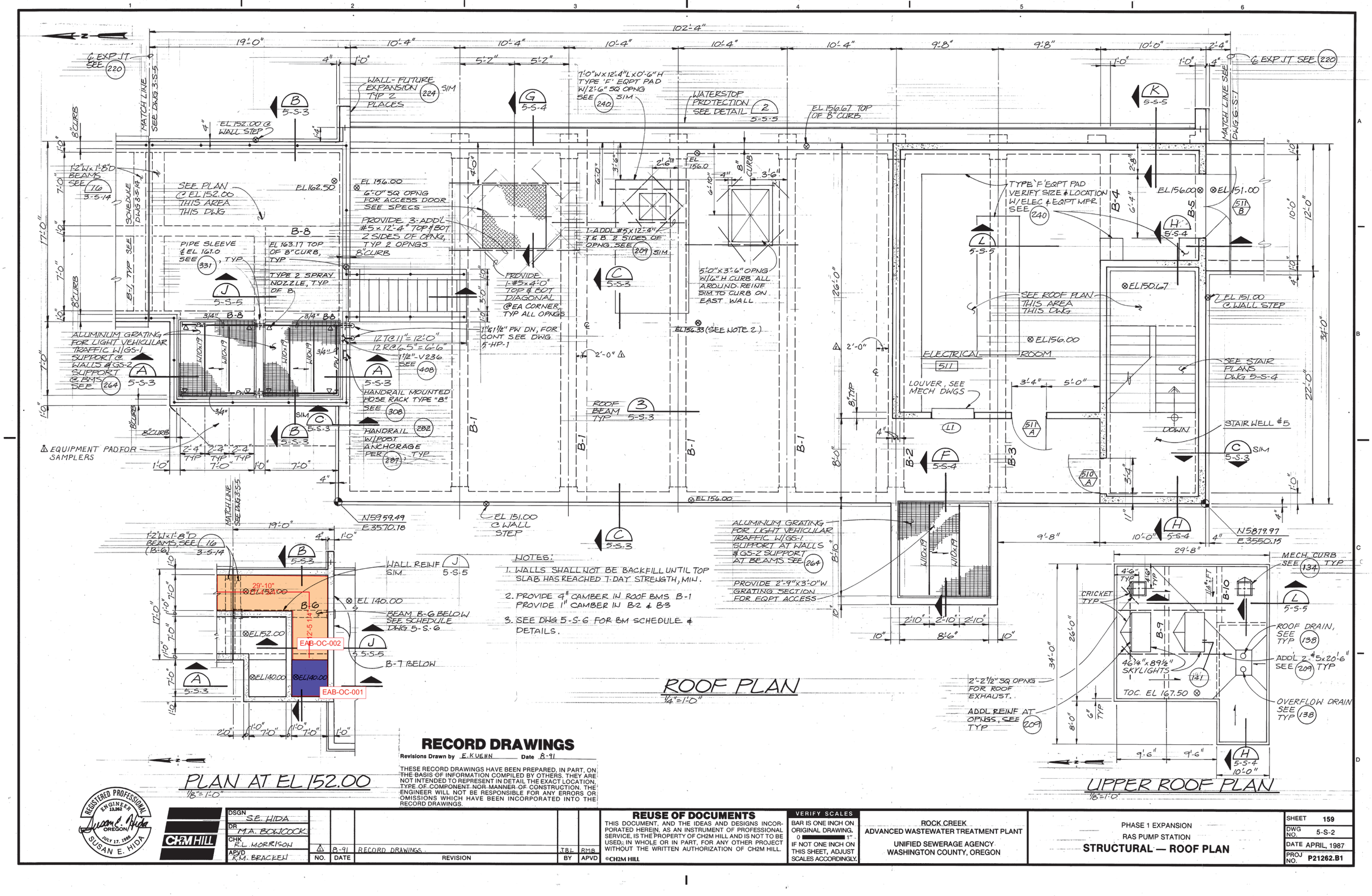

RECORD DRAWINGS

Revisions Drawn by E. KUEHN Date 8-91

THESE RECORD DRAWINGS HAVE been PREPARED, IN PART, ON THE BASIS OF INFORMATION COMPILED BY OTHERS. THEY ARE NOT INTENDED TO REPRESENT IN DETAIL THE EXACT LOCATION, TYPE OF COMPONENT NOR MANNER OF CONSTRUCTION. THE ENGINEER WILL NOT BE RESPONSIBLE FOR ANY ERRORS OR OMISSIONS WHICH HAVE BEEN INCORPORATED INTO THE RECORD DRAWINGS.

REGISTERED PROFESSIONAL ENGINEER — OREGON — 13,262 — JULY 17, 1998 — SUSAN E. HIDA

CH2M HILL

DSGN	S.E. HIDA
DR	M.A. BOWCOCK
CHK	R.L. MORRISON
APVD	R.M. BRACKEN

NO.	DATE	REVISION	BY	APVD
1	8-91	RECORD DRAWINGS.	TBL	RMB

REUSE OF DOCUMENTS

THIS DOCUMENT, AND THE IDEAS AND DESIGNS INCORPORATED HEREIN, AS AN INSTRUMENT OF PROFESSIONAL SERVICE, IS THE PROPERTY OF CH2M HILL AND IS NOT TO BE USED, IN WHOLE OR IN PART, FOR ANY OTHER PROJECT WITHOUT THE WRITTEN AUTHORIZATION OF CH2M HILL.

©CH2M HILL

VERIFY SCALES

BAR IS ONE INCH ON ORIGINAL DRAWING. 0 1"

IF NOT ONE INCH ON THIS SHEET, ADJUST SCALES ACCORDINGLY.

ROCK CREEK
ADVANCED WASTEWATER TREATMENT PLANT

UNIFIED SEWERAGE AGENCY
WASHINGTON COUNTY, OREGON

PHASE 1 EXPANSION
RAS PUMP STATION
STRUCTURAL — ROOF PLAN

SHEET NO.	159
DWG NO.	5-S-2
DATE	APRIL, 1987
PROJ NO.	P21262.B1

CHECKED BY 1 2 3
DRAWN BY 1 2 3
DESIGNED BY 1 2 3
PRINTED 10 84
FILM KE
FORMAT 2234 DC

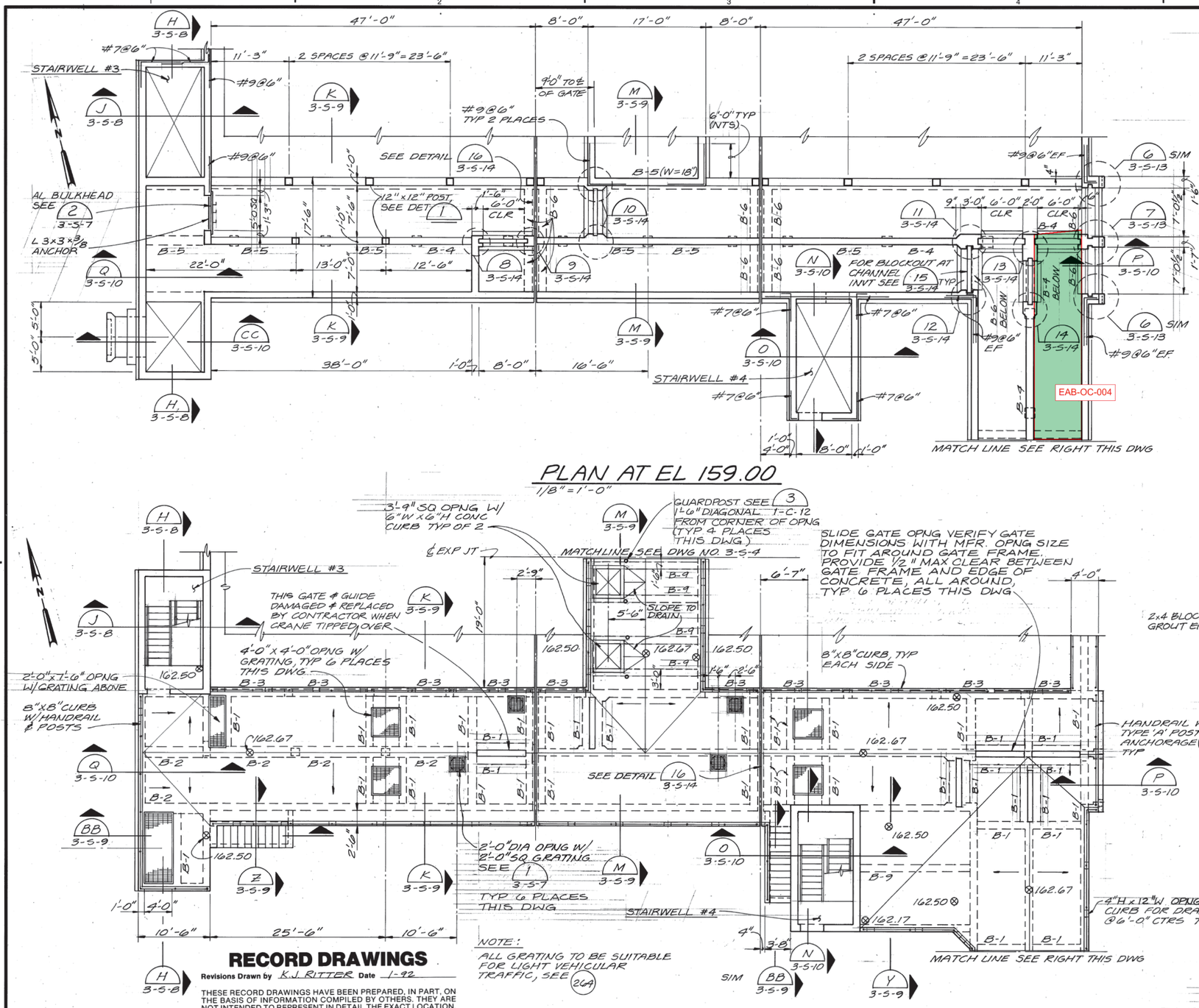

PLAN AT EL 159.00

1/8"=1'-0"

PLAN AT EL 162.50

1/8"=1'-0"

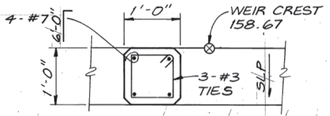

POST DETAIL 1

3/4"=1'-0"

3-5-5
3-5-7

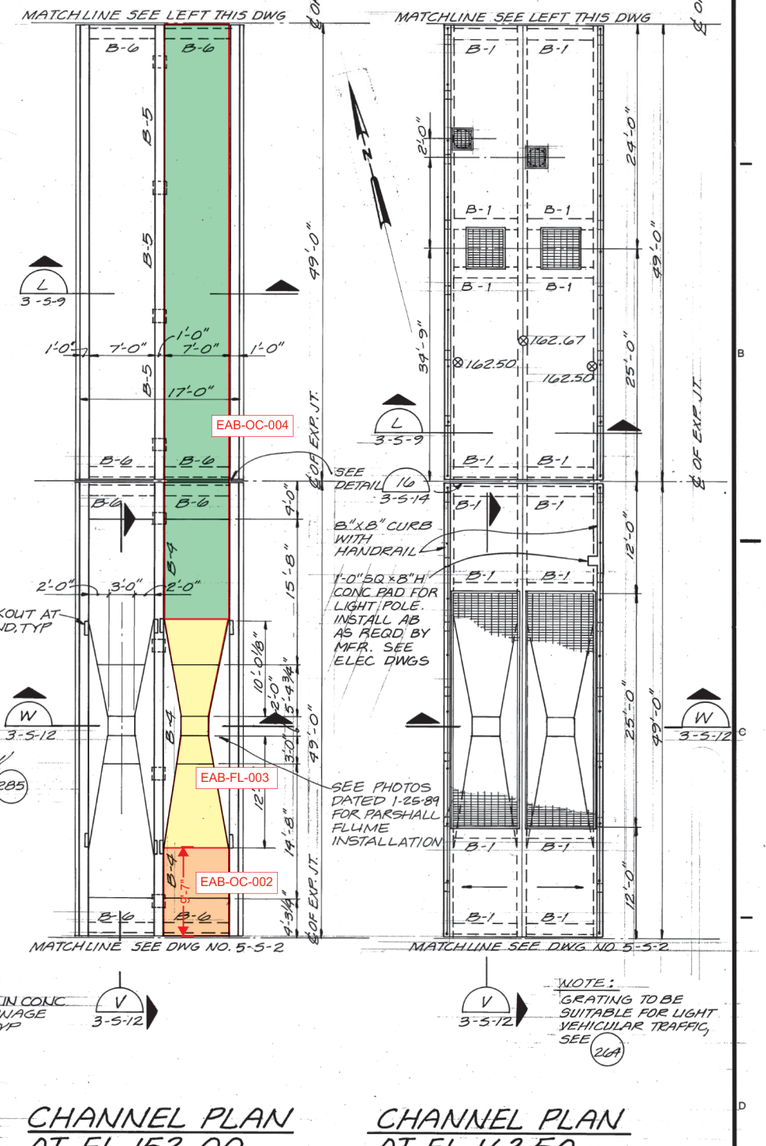

CHANNEL PLAN AT EL 152.00

1/8"=1'-0"

CHANNEL PLAN AT EL 162.50

1/8"=1'-0"

NOTE: GRATING TO BE SUITABLE FOR LIGHT VEHICULAR TRAFFIC, SEE 26A

RECORD DRAWINGS

Revisions Drawn by K.J. RITTER Date 1-92

THESE RECORD DRAWINGS HAVE BEEN PREPARED, IN PART, ON THE BASIS OF INFORMATION COMPILED BY OTHERS. THEY ARE NOT INTENDED TO REPRESENT IN DETAIL THE EXACT LOCATION, TYPE OF COMPONENT NOR MANNER OF CONSTRUCTION. THE ENGINEER WILL NOT BE RESPONSIBLE FOR ANY ERRORS OR OMISSIONS WHICH HAVE BEEN INCORPORATED INTO THE RECORD DRAWINGS.

REGISTERED PROFESSIONAL ENGINEER 7084 OREGON JULY 16, 1971 RICHARD A. HORNING

CH2M HILL

DSGN	E.A. HORNING
DR	T.W. MCINTYRE
CHK	S.M. FREY
APVD	R.M. BRACKEN

NO.	DATE	REVISION	BY	APVD
	5-91	RECORD DRAWINGS	JBL	RMB

REUSE OF DOCUMENTS

THIS DOCUMENT, AND THE IDEAS AND DESIGNS INCORPORATED HEREIN, AS AN INSTRUMENT OF PROFESSIONAL SERVICE, IS THE PROPERTY OF CH2M HILL AND IS NOT TO BE USED, IN WHOLE OR IN PART, FOR ANY OTHER PROJECT WITHOUT THE WRITTEN AUTHORIZATION OF CH2M HILL.

©CH2M HILL

VERIFY SCALES

BAR IS ONE INCH ON ORIGINAL DRAWING. 0 1"

IF NOT ONE INCH ON THIS SHEET, ADJUST SCALES ACCORDINGLY.

ROCK CREEK
ADVANCED WASTEWATER TREATMENT PLANT
UNIFIED SEWERAGE AGENCY
WASHINGTON COUNTY, OREGON

PHASE 1 EXPANSION
AERATION BASINS

STRUCTURAL — EFFLUENT CHANNEL PLANS AND DETAIL

SHEET	127
DWG NO.	3-S-5
DATE	APRIL, 1987
PROJ NO.	P21262.B1

3-S-5

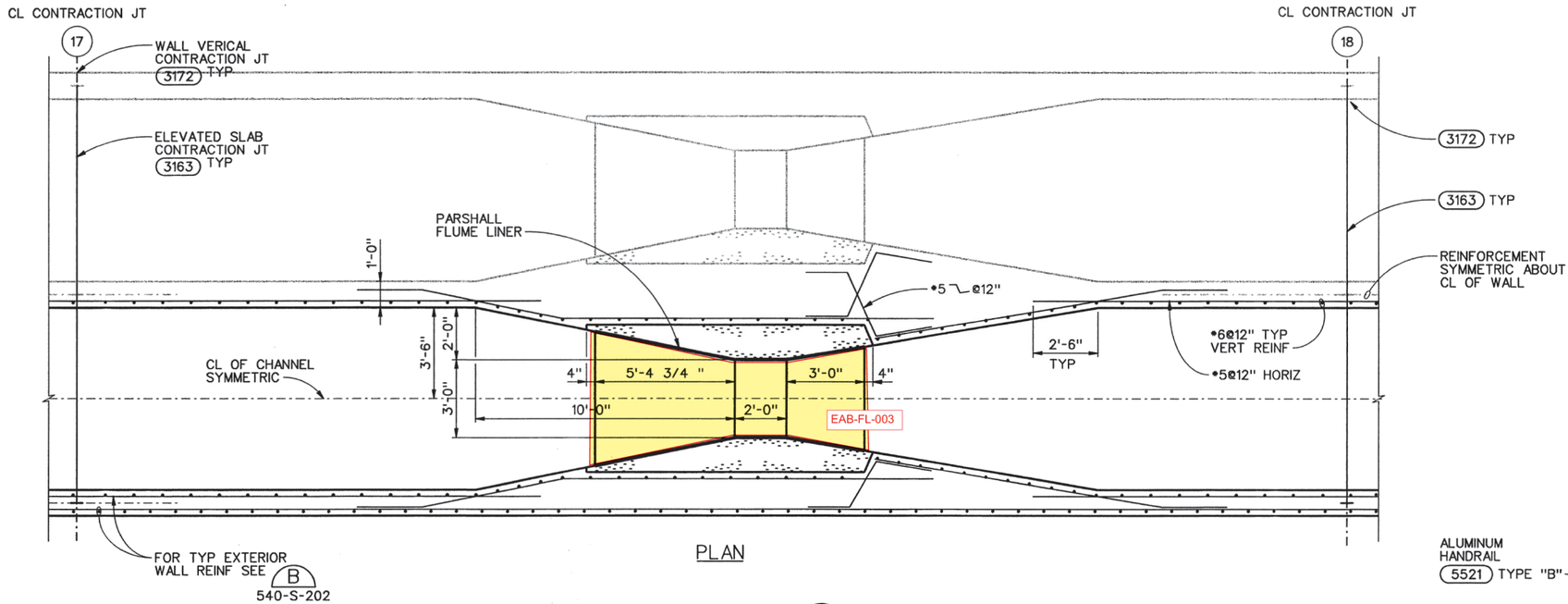

PLAN

NOTE:
FOR PARSHALL FLUME INSTALLATION, SEE SPECIFICATION SECTION 13100.

SECTION L
3/8"=1'-0"

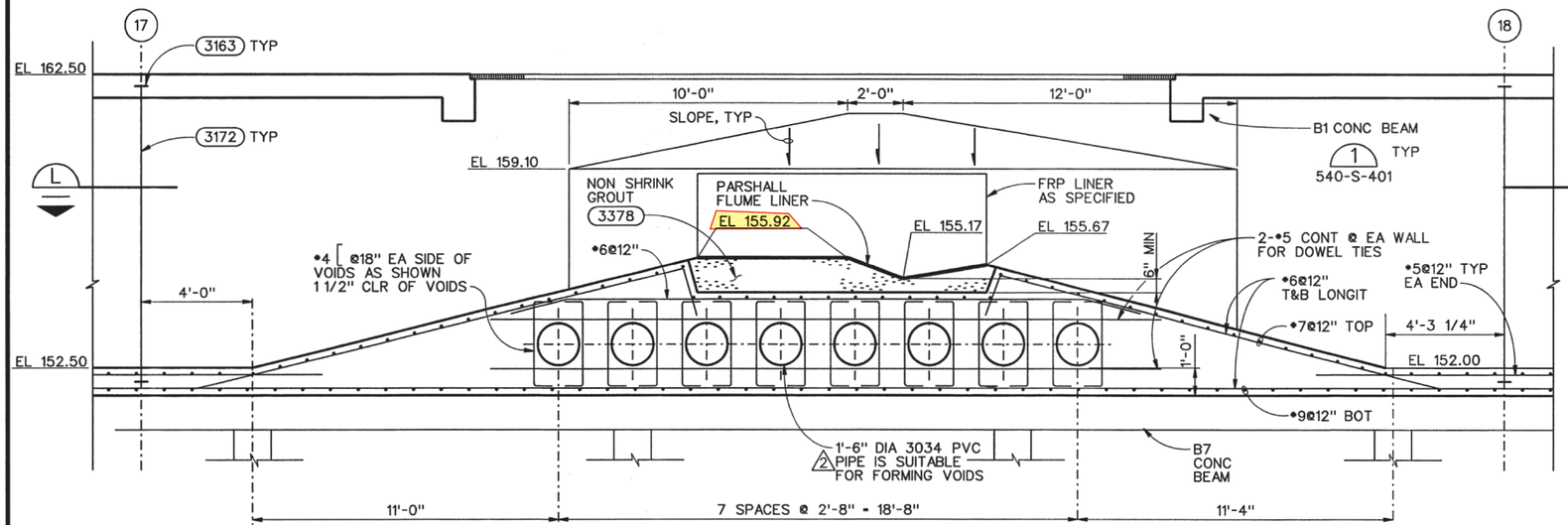

SECTION J
3/8"=1'-0"
540-S-130
540-S-140

ALUMINUM HANDRAIL 5521 TYPE "B"

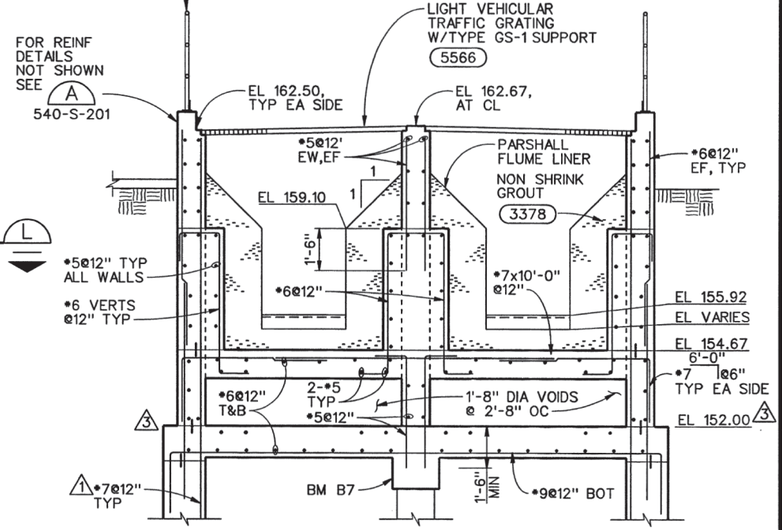

SECTION K
3/8"=1'-0"
540-S-130
540-S-140

RECORD DRAWINGS

Revisions Drawn By B.J. MCCORKLE Date 7/13/2001

THESE RECORD DRAWINGS HAVE BEEN PREPARED, IN PART, ON THE BASIS OF INFORMATION COMPILED BY OTHERS. THEY ARE NOT INTENDED TO REPRESENT IN DETAIL THE EXACT LOCATION, TYPE OF COMPONENT NOR MANNER OF CONSTRUCTION. THE ENGINEER WILL NOT BE RESPONSIBLE FOR ANY ERRORS OR OMISSIONS WHICH HAVE BEEN INCORPORATED INTO THE RECORD DRAWINGS.

The Contract Document Drawings are printed documents dated Feb. 1999, as subsequently amended, which define the scope, extent, and character of the work. The original document drawing was sealed & signed by Alex L. Firth, State of Oregon, P.E. No. 15977, dated July 21, 1992.

DSGN	RA GERMAINE
DR	EJ PUIG
CHK	SM FREY
APVD	J GOETZ

NO.	DATE	REVISION	BY	APVD
3	11/01	RECORD DRAWING	BJM	RBF
2	12/99	CIR NO. 121	PWB	ALF
1	11/99	CIR NO. 111	RBF	SMF
	11/99	CIR NO. 109	PWB	RAG

VERIFY SCALE
BAR IS ONE INCH ON ORIGINAL DRAWING.
0 1"
IF NOT ONE INCH ON THIS SHEET, ADJUST SCALES ACCORDINGLY.

CH2MHILL

ROCK CREEK FACILITY
EXPANSION - PHASE 5
PACKAGE A
UNIFIED SEWERAGE AGENCY
WASHINGTON COUNTY, OREGON

SECONDARY TREATMENT
STRUCTURAL
EAST AERATION BASIN NO. 6
SECTIONS

SHEET	109
DWG	540-S-204
DATE	FEB 1999
PROJ	146190

REUSE OF DOCUMENTS: THIS DOCUMENT AND THE IDEAS AND DESIGNS INCORPORATED HEREIN, AS AN INSTRUMENT OF PROFESSIONAL SERVICE, IS THE PROPERTY OF CH2M HILL AND IS NOT TO BE USED, WHOLE OR IN PART, FOR ANY OTHER PROJECT WITHOUT THE WRITTEN AUTHORIZATION OF CH2M HILL. © CH2M HILL

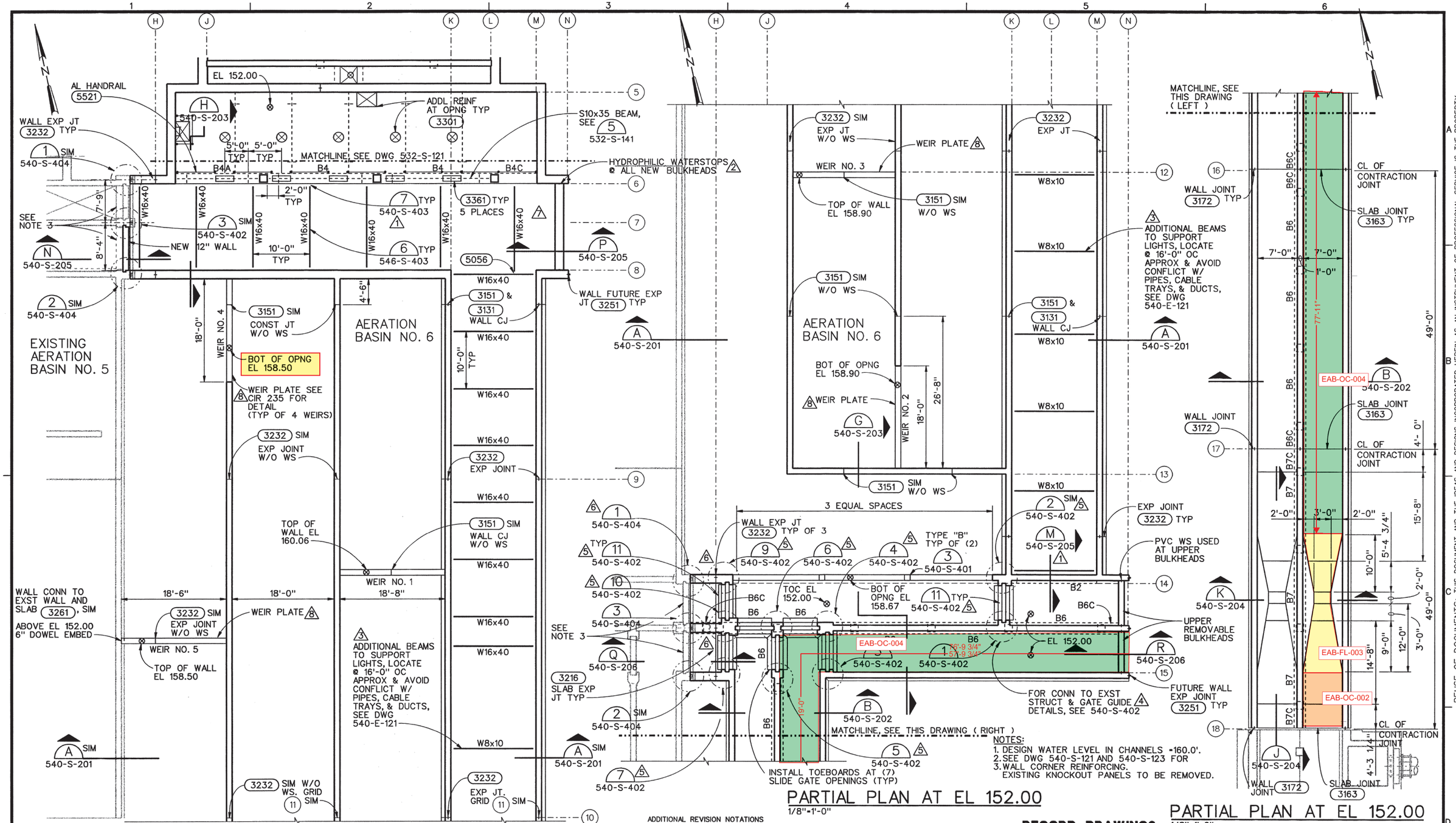

PARTIAL PLAN AT EL 152.00
1/8"=1'-0"

PARTIAL PLAN AT EL 152.00
1/8"=1'-0"

PARTIAL PLAN AT EL 152.00
1/8"=1'-0"

ADDITIONAL REVISION NOTATIONS

5	11/01	RECORD DRAWING	BJM	RBF
4	12/00	CIR NO. 235	RBF	JMP
3	9/00	CIR NO. 219	PWB	ALF
2	2/00	CIR NO. 159	PWB	JMP

RECORD DRAWINGS

Revisions Drawn By R. FRIBERG Date 7/13/2001

THESE RECORD DRAWINGS HAVE BEEN PREPARED, IN PART, ON THE BASIS OF INFORMATION COMPILED BY OTHERS. THEY ARE NOT INTENDED TO REPRESENT IN DETAIL THE EXACT LOCATION, TYPE OF COMPONENT NOR MANNER OF CONSTRUCTION. THE ENGINEER WILL NOT BE RESPONSIBLE FOR ANY ERRORS OR OMISSIONS WHICH HAVE BEEN INCORPORATED INTO THE RECORD DRAWINGS.

The Contract Document Drawings are printed documents dated Feb. 1999, as subsequently amended, which define the scope, extent, and character of the work. The original document drawing was sealed & signed by Alex L. Firth, State of Oregon, P.E. No. 15977, dated July 21, 1992.

DSGN	RA GERMAINE
DR	EJ PUIG
CHK	SM FREY
APVD	J GOETZ

NO.	DATE	REVISION	BY	APVD
5	2/00	CIR NO. 157	PWB	JMP
4	2/00	CIR NO. 147	RBF	JMP
3	2/00	CIR NO. 150	PWB	JMP
2	4/99	ADDENDUM NO. 4	MSM	ALF
1				

VERIFY SCALE
BAR IS ONE INCH ON ORIGINAL DRAWING.
0 1"
IF NOT ONE INCH ON THIS SHEET, ADJUST SCALES ACCORDINGLY.

CH2MHILL

ROCK CREEK FACILITY
EXPANSION - PHASE 5
PACKAGE A
UNIFIED SEWERAGE AGENCY
WASHINGTON COUNTY, OREGON

SECONDARY TREATMENT
STRUCTURAL
EAST AERATION BASIN NO. 6
PARTIAL PLANS AT EL 152.00

SHEET	104
DWG	540-S-130
DATE	FEB 1999
PROJ	146190

REUSE OF DOCUMENTS: THIS DOCUMENT AND THE IDEAS AND DESIGNS INCORPORATED HEREIN, AS AN INSTRUMENT OF PROFESSIONAL SERVICE, IS THE PROPERTY OF CH2M HILL AND IS NOT TO BE USED, WHOLE OR IN PART, FOR ANY OTHER PROJECT WITHOUT THE WRITTEN AUTHORIZATION OF CH2M HILL. © CH2M HILL

NOTES:
1. SEE SHEET G-14 FOR STRUCTURAL NOTES.
2. SEE SHEET G-15 FOR SPECIAL INSPECTION REQUIREMENTS.
3. MIXER AND PUMP ACESS PLATFORM LIVE LOAD = 100PSF PLUS EUIP WT.

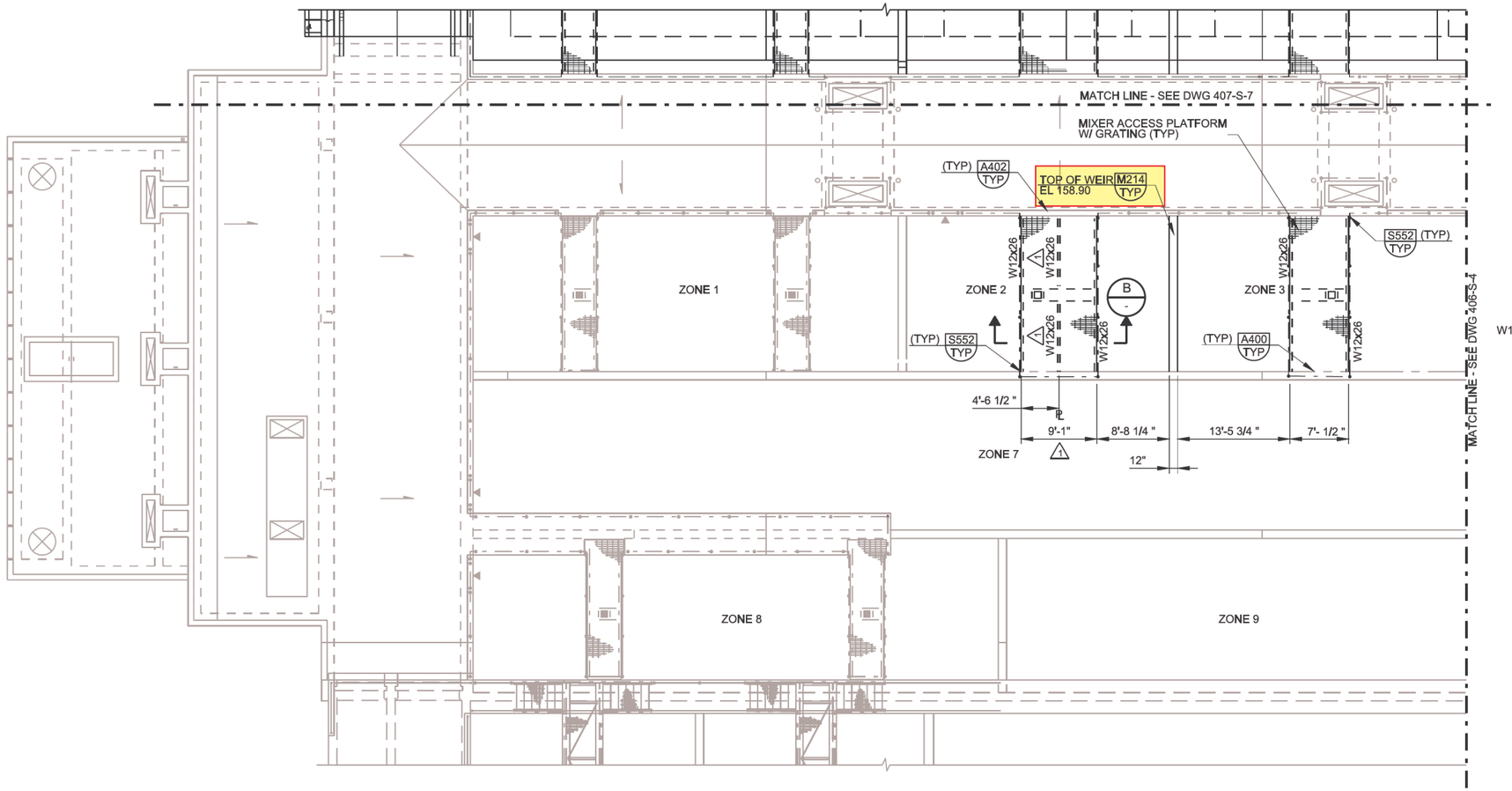

A **UPPER LEVEL PARTIAL PLAN (NORTH)**
SCALE: 1/8" = 1'-0"
FILE: r540sp40

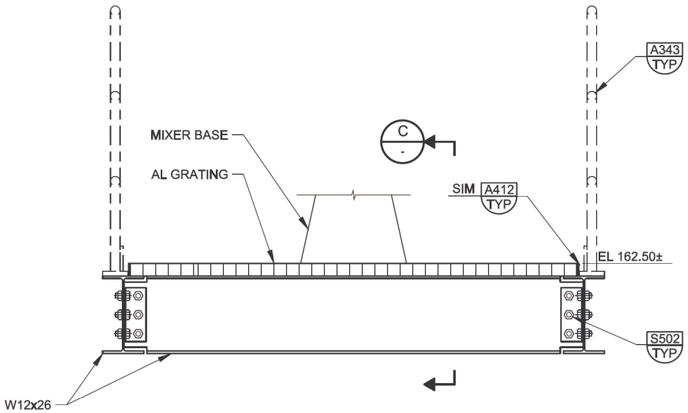

B **SECTION**
SCALE: 1"-1'-0"
FILE: 7182A-040-315

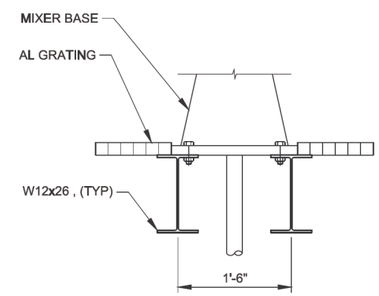

C **SECTION**
SCALE: 1"-1'-0"
FILE: 7182A-040-315

DATE: 17-MAY-2010 11:15
LAST SAVED BY: sseverin

REV	DATE	BY	DESCRIPTION
1	4/10	CFS	DC #14

PROJECT NO. FILE NAME: _title_blks.CEL

DESIGNED KM
DRAWN EDL/MJG
CHECKED HR
DATE MAY 2010
DISCIPLINE ENGINEER

** ORIGINAL STAMPED BY KIPP A. MARTIN 04/09/10 16276 **

RECORD DRAWING
THESE RECORD DRAWINGS HAVE BEEN PREPARED BASED IN PART ON INFORMATION PROVIDED BY OTHERS

THIS DRAWING WAS PREPARED ONLY FOR THE PROJECT AND SITE SPECIFICALLY IDENTIFIED HEREON AND IS NOT TO BE USED ELSEWHERE

carollo

Clean Water Services
Our commitment is clear.

ROCK CREEK AWTF
EAST AERATION BASINS IMPROVEMENTS PROJECT
STRUCTURAL
AERATION BASIN 6
UPPER LEVEL PARTIAL PLAN (NORTH)

VERIFY SCALES
BAR IS ONE INCH ON ORIGINAL DRAWING
0 1"
IF NOT ONE INCH ON THIS SHEET, ADJUST SCALES ACCORDINGLY

JOB NO. 7182A.10
DRAWING NO. 406-S-3
SHEET NO. 39 OF 143

NOTES:
1. SEE SHEET G-14 FOR STRUCTURAL NOTES.
2. SEE SHEET G-15 FOR SPECIAL INSPECTION REQUIREMENTS.
3. MIXER AND PUMP ACESS PLATEORM LIVE LOAD = 100PSF PLUS EUIP WT.

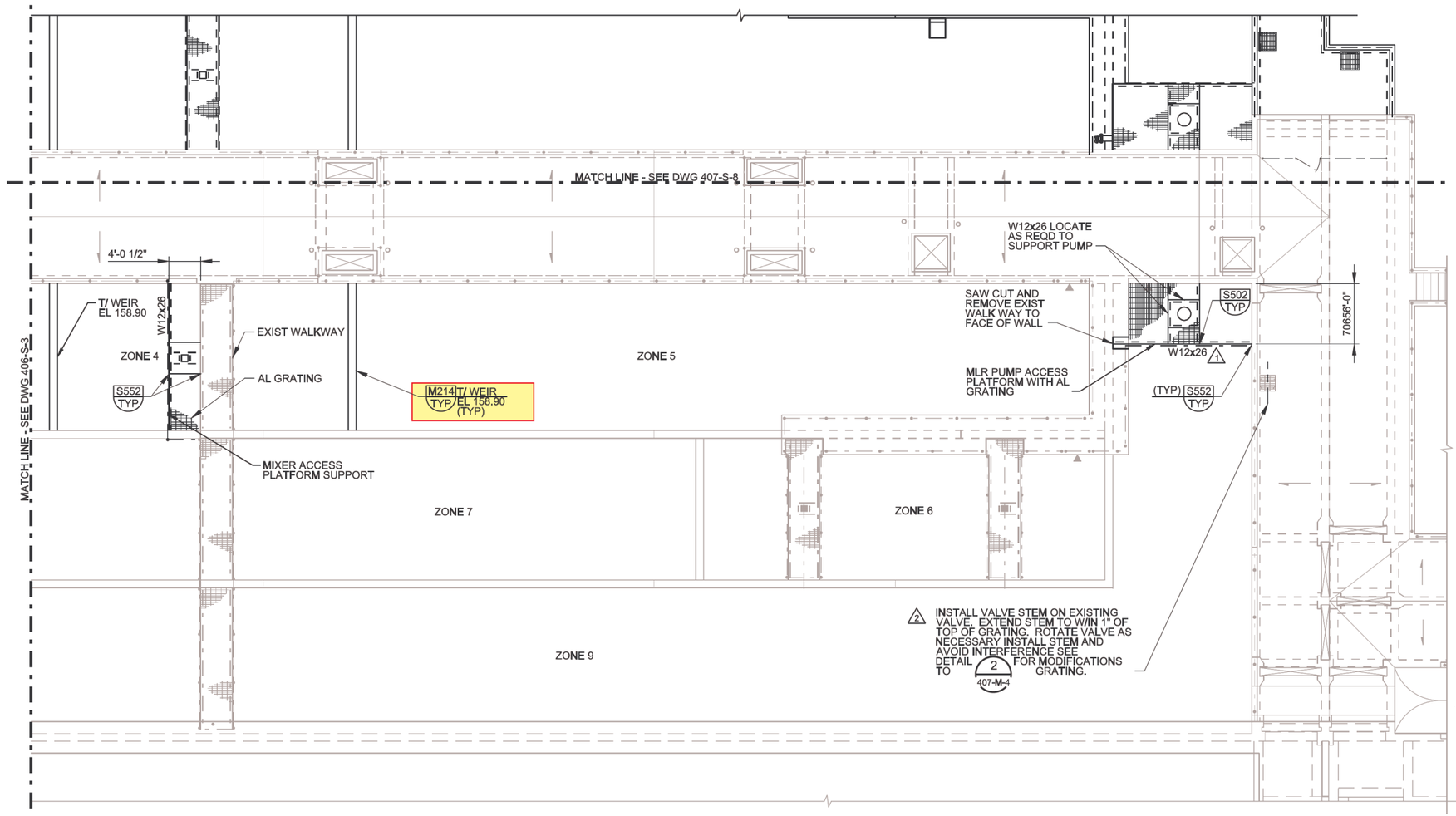

A UPPER LEVEL PARTIAL PLAN (SOUTH)
SCALE: 1/8" = 1'-0"
FILE: r540sp40

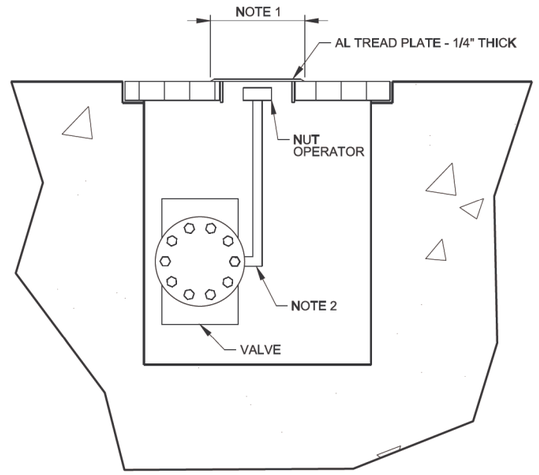

NOTES:
1. REFER TO DETAIL B - PROVIDE 4" SQUARE OPENING IN GRATING BAND GRATING ALL AROUND CENTER OPENING OVER NUT
2. ROTATE VALVE AS NECESSARY FOR INSTALLATION OF VALVE STEM EXTENSION & NUT OPERATOR.

2 A - SECTION
SCALE: NTS
FILE: -

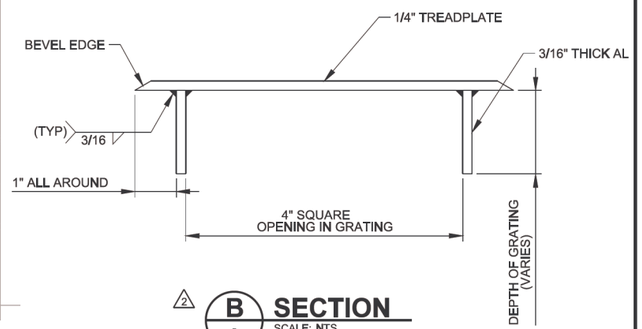

2 B - SECTION
SCALE: NTS
FILE: -

REV	DATE	BY	DESCRIPTION
2	4/10	CFS	COR #44
1	4/10	CFS	COR #30

PROJECT NO. FILE NAME: _title_blks.CEL

DESIGNED KM
DRAWN EDL/MJG
CHECKED HR
DATE MAY 2010
DISCIPLINE ENGINEER

** ORIGINAL STAMPED BY KIPP A. MARTIN 04/09/10 16276 **

RECORD DRAWING
THESE RECORD DRAWINGS HAVE BEEN PREPARED BASED IN PART ON INFORMATION PROVIDED BY OTHERS

THIS DRAWING WAS PREPARED ONLY FOR THE PROJECT AND SITE SPECIFICALLY IDENTIFIED HEREON AND IS NOT TO BE USED ELSEWHERE

carollo

Clean Water Services
Our commitment is clear.

ROCK CREEK AWTF
EAST AERATION BASINS IMPROVEMENTS PROJECT
STRUCTURAL
AERATION BASIN 6
UPPER LEVEL PARTIAL PLAN (SOUTH)

VERIFY SCALES
BAR IS ONE INCH ON ORIGINAL DRAWING
0 1"
IF NOT ONE INCH ON THIS SHEET, ADJUST SCALES ACCORDINGLY

JOB NO. 7182A.10
DRAWING NO. 406-S-4
SHEET NO. 40 OF 143

LAST SAVED BY: sseverin
DATE: 02-JUN-2010 13:47

NOTES:
1. SEE SHEET G-14 FOR STRUCTURAL NOTES.
2. SEE SHEET G-15 FOR SPECIAL INSPECTION REQUIREMENTS.
3. JOINTS IN WALLS SHALL MATCH TYPE AND LOCATION OF BOTTOM SLAB JOINTS. SEE SHEET 407-S-4.
4. SEE ELEC AND MECH DWGS FOR CONDUIT AND PIPE PENETRATIONS IN WALLS AND SLABS.
5. SEE SHEET 407-S-4 FOR ADDITIONAL REINF AT WALL CORNERS AND INTER SECTIONS.

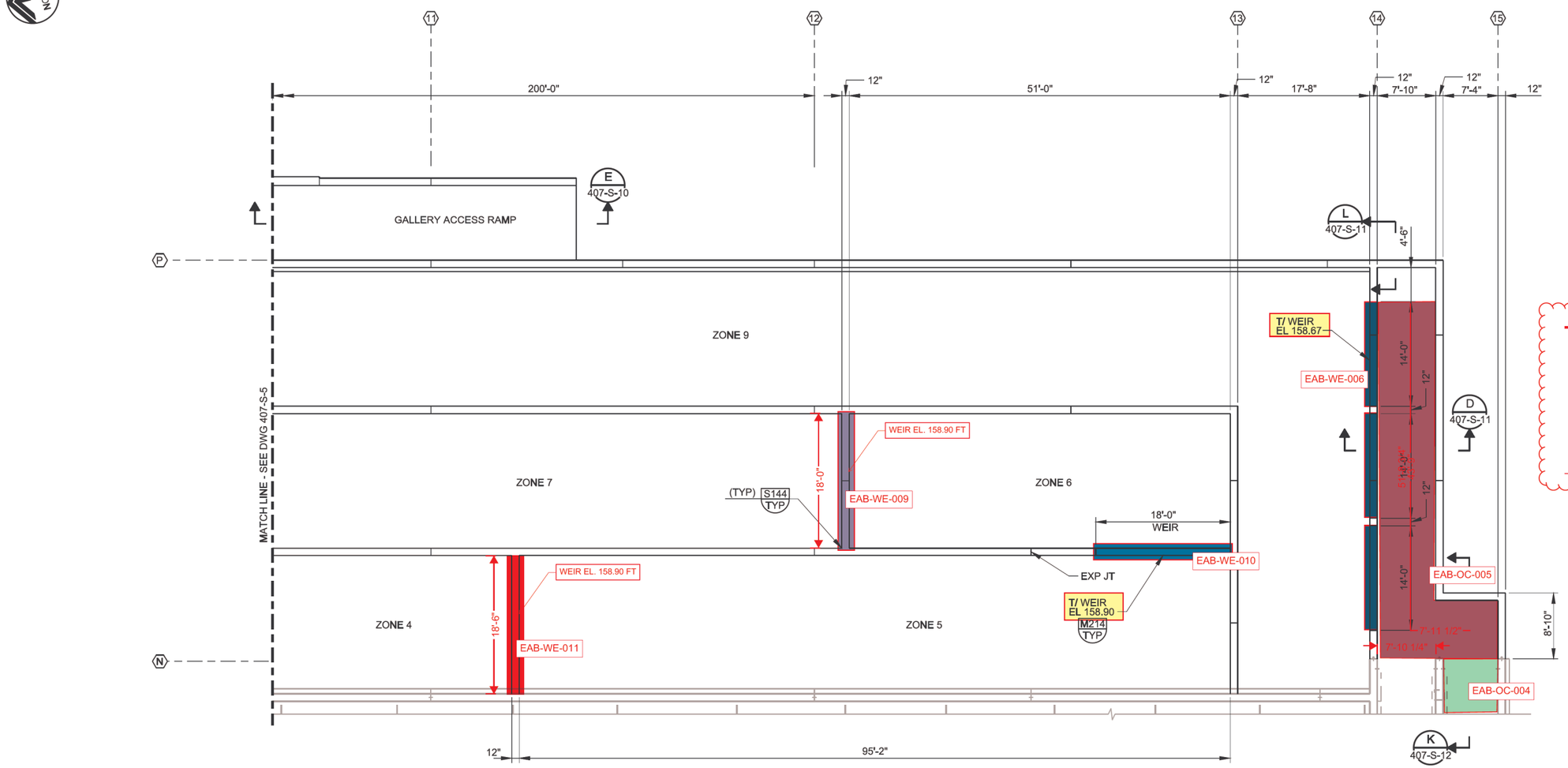

AB NO. 6 & 7 WEIR ELEVATIONS	
ZONE 1-2	160.06
ZONE 2-3	158.90
ZONE 3-4	158.90
ZONE 4-5	158.90
ZONE 5-6	158.90
ZONE 6-7	158.90
ZONE 7-8	158.50
ZONE 8-9	158.50

FROM HYDRAULIC PROFILE

A LOWER LEVEL PLAN
SCALE: 1/8" = 1'-0"
FILE: 7182A-040-103

DATE: 12-MAY-2010 09:50
LAST SAVED BY: elongoria

REV	DATE	BY	DESCRIPTION

PROJECT NO. 7182A10 FILE NAME: 7182A10-407-S-006.dgn

DESIGNED KAM
DRAWN MJG
CHECKED HR
DATE MAY 2010

DISCIPLINE ENGINEER
** ORIGINAL STAMPED BY KIPP A. MARTIN 04/09/10 16276 **

RECORD DRAWING
THESE RECORD DRAWINGS HAVE BEEN PREPARED BASED IN PART ON INFORMATION PROVIDED BY OTHERS
THIS DRAWING WAS PREPARED ONLY FOR THE PROJECT AND SITE SPECIFICALLY IDENTIFIED HEREON AND IS NOT TO BE USED ELSEWHERE

carollo

Clean Water Services
Our commitment is clear.

ROCK CREEK AWTF
EAST AERATION BASINS IMPROVEMENTS PROJECT
STRUCTURAL
AERATION BASIN 7
LOWER LEVEL PARTIAL PLAN (SOUTH)

VERIFY SCALES
BAR IS ONE INCH ON ORIGINAL DRAWING
0 1"
IF NOT ONE INCH ON THIS SHEET, ADJUST SCALES ACCORDINGLY

JOB NO. 7182A.10
DRAWING NO. 407-S-6
SHEET NO. 59 OF 143

NOTES:
1. SEE SHEET G-14 FOR STRUCTURAL NOTES.
2. SEE SHEET G-15 FOR SPECIAL INSPECTION REQUIREMENTS.
3. JOINTS IN WALLS SHALL MATCH TYPE AND LOCATION OF BOTTOM SLAB JOINTS. SEE SHEET 407-S-3.
4. SEE ELEC AND MECH DWGS FOR CONDUIT AND PIPE PENETRATIONS IN WALLS AND SLABS.
5. SEE SHEET 407-S-3 FOR ADDITIONAL REINF AT WALL CORNERS AND INTERSECTIONS.

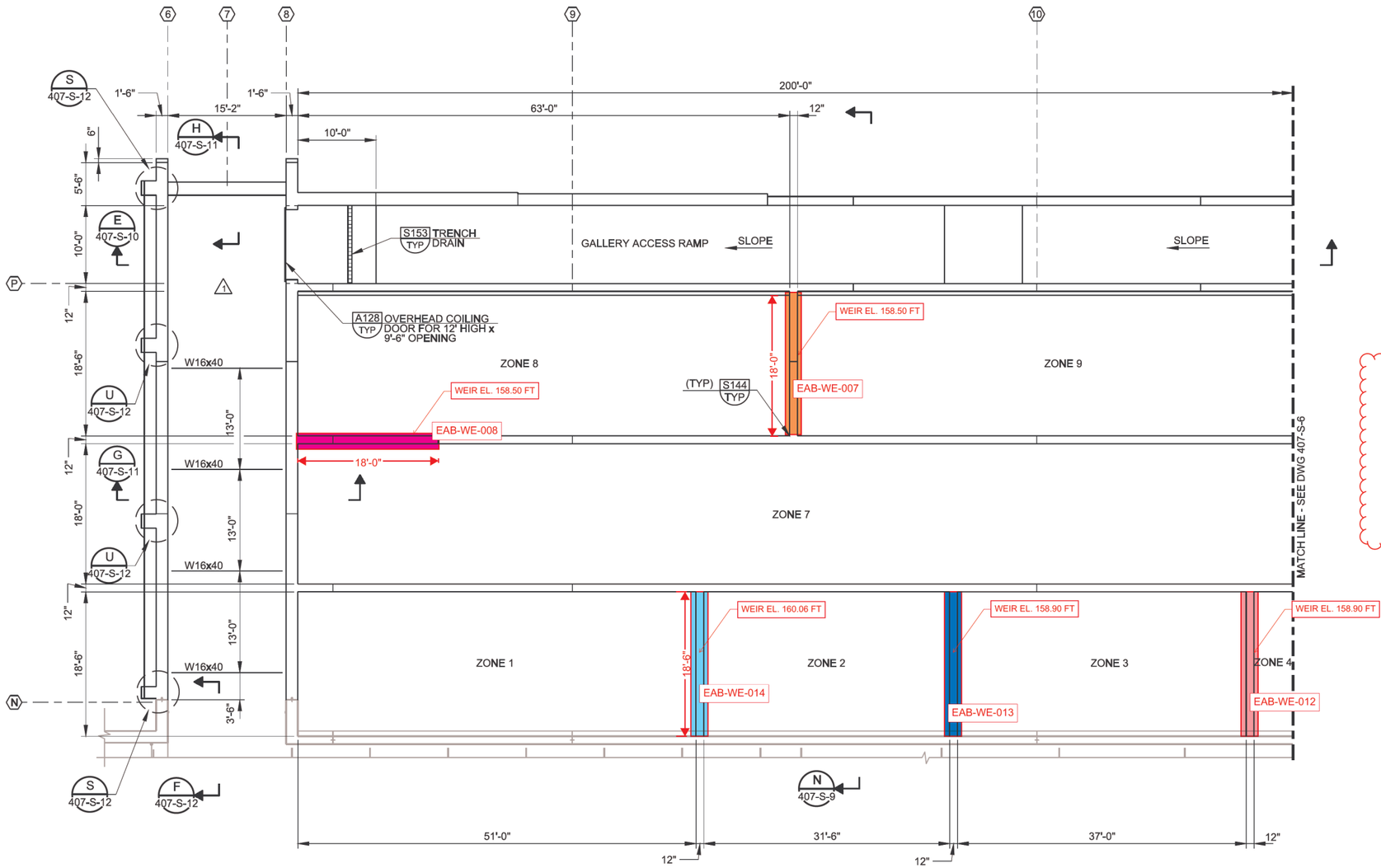

AB NO. 6 & 7 WEIR ELEVATIONS	
ZONE 1-2	160.06
ZONE 2-3	158.90
ZONE 3-4	158.90
ZONE 4-5	158.90
ZONE 5-6	158.90
ZONE 6-7	158.90
ZONE 7-8	158.50
ZONE 8-9	158.50

FROM HYDRAULIC PROFILE

A LOWER LEVEL PLAN
SCALE: 1/8" = 1'-0"
FILE: 7182A-040-103

REV	DATE	BY	DESCRIPTION
1	4/10	CFS	RFI #15

PROJECT NO. 7182A10 FILE NAME: 7182A10-407-S-005.dgn

DESIGNED KAM
DRAWN MJG
CHECKED HR
DATE MAY 2010

DISCIPLINE ENGINEER
** ORIGINAL STAMPED BY KIPP A. MARTIN 04/09/10 16276 **

RECORD DRAWING
THESE RECORD DRAWINGS HAVE BEEN PREPARED BASED IN PART ON INFORMATION PROVIDED BY OTHERS
THIS DRAWING WAS PREPARED ONLY FOR THE PROJECT AND SITE SPECIFICALLY IDENTIFIED HEREON AND IS NOT TO BE USED ELSEWHERE

carollo

Clean Water Services
Our commitment is clear.

ROCK CREEK AWTF
EAST AERATION BASINS IMPROVEMENTS PROJECT
STRUCTURAL
AERATION BASIN 7
LOWER LEVEL PARTIAL PLAN (NORTH)

VERIFY SCALES
BAR IS ONE INCH ON ORIGINAL DRAWING
0 1"
IF NOT ONE INCH ON THIS SHEET, ADJUST SCALES ACCORDINGLY

JOB NO. 7182A.10
DRAWING NO. 407-S-5
SHEET NO. 58 OF 143

LAST SAVED BY: elongoria
DATE: 12-MAY-2010 09:49

NORTH

GENERAL NOTES:

A. CONNECT PNEUMATIC VALVES TO 2" AHP HEADER PER THE PNEUMATIC ACTUATOR SPECIFICATION AND INSTRUMENT DRAWINGS.

B SEE DRAWING G-5 FOR GENERAL MECHANICAL NOTES.

KEY NOTES:

1 48" PE SHALL SLOPE 2" BACK TO EXIST 48" PE.

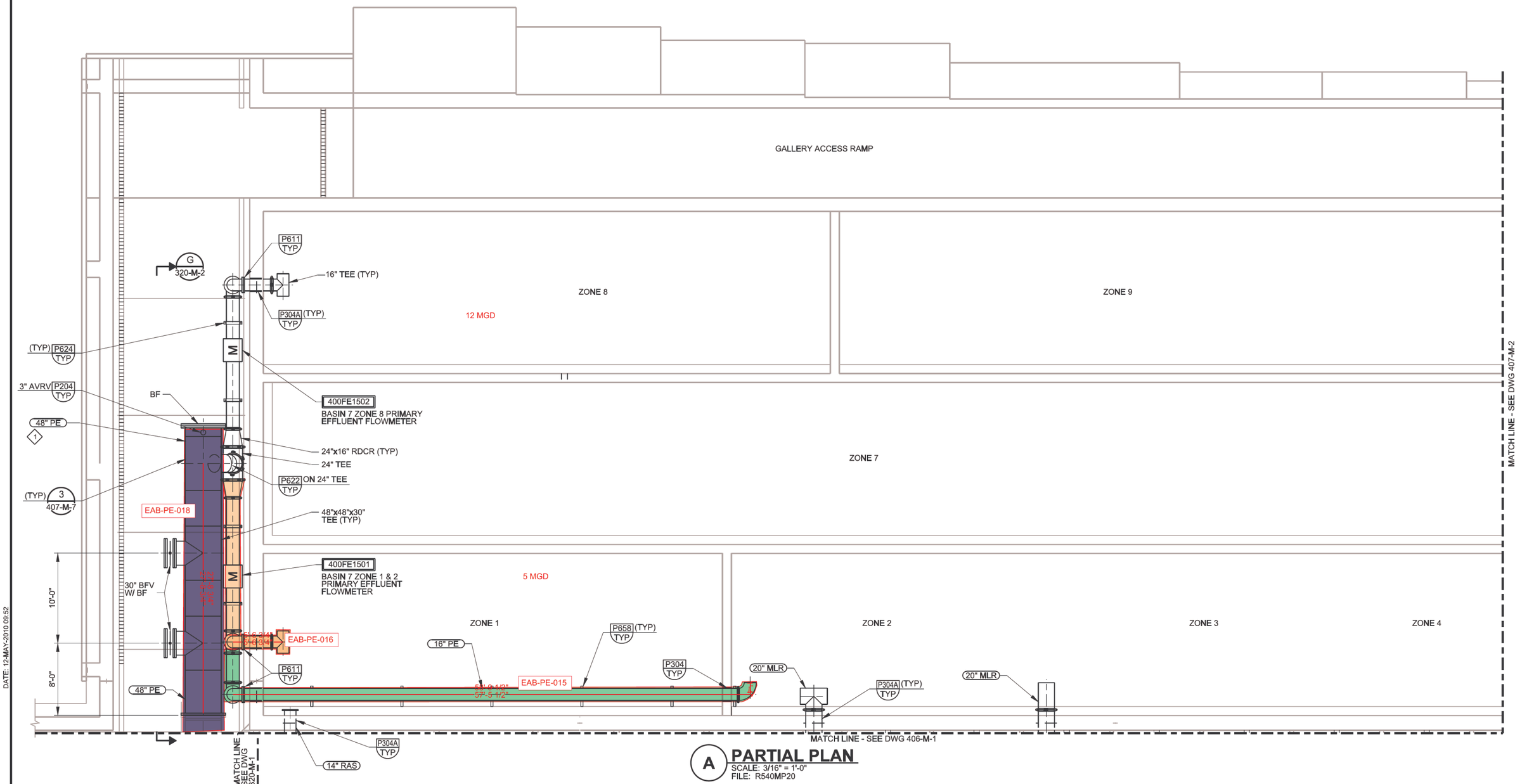

A PARTIAL PLAN

SCALE: 3/16" = 1'-0"
FILE: R540MP20

DATE: 12-MAY-2010 09:52

LAST SAVED BY: elongoria

REV	DATE	BY	DESCRIPTION

PROJECT NO. 7182A10 FILE NAME: 7182A10-407-M-001.dgn

DESIGNED AS/JM
DRAWN MJG
CHECKED TT
DATE MAY 2010

DISCIPLINE ENGINEER
** ORIGINAL STAMPED BY JEFFREY M. McCORMICK 04/09/10 19616PE **

RECORD DRAWING

THESE RECORD DRAWINGS HAVE BEEN PREPARED BASED IN PART ON INFORMATION PROVIDED BY OTHERS

THIS DRAWING WAS PREPARED ONLY FOR THE PROJECT AND SITE SPECIFICALLY IDENTIFIED HEREON AND IS NOT TO BE USED ELSEWHERE

carollo

Clean Water Services
Our commitment is clear.

ROCK CREEK AWTF
EAST AERATION BASINS IMPROVEMENTS PROJECT
MECHANICAL
AERATION BASIN 7
LOWER LEVEL PARTIAL PLAN (NORTH)

VERIFY SCALES
BAR IS ONE INCH ON ORIGINAL DRAWING
0 1"
IF NOT ONE INCH ON THIS SHEET, ADJUST SCALES ACCORDINGLY

JOB NO. 7182A.10
DRAWING NO. 407-M-1
SHEET NO. 66 OF 143

GENERAL NOTES:

A. ALL ALP PIPING INSULATED PER SPECIFICATION SECTION 15082.

B. SEE DRAWING G-5 FOR GENERAL MECHANICAL NOTES.

KEY NOTES:

1. FIELD COORDINATE ROUTING OF NEW 24" ALP BELOW EXISTING 24" ALP AND OVER EXISTING BEAM. INSULATION AT BEAM MAY BE DELETED AS REQUIRED. FIELD COORDINATE LOCATION OF P640 TYP WITH EXISTING BEAM.
2. INSTALLATION OF 24" ALP IN THIS AREA WILL REQUIRE RELOCATION OF 1 1/2" PW LINE AND IS EXTREMELY CONFINED. FIELD MEASUREMENT WILL BE REQUIRED PRIOR TO PIPE FABRICATION.
3. ROUTE NEW 24" ALP UNDER EXISTING 24" ALP AND ABOVE TOP OF EXISTING JUNCTION BOX.
4. INSTALL SUPPORTS UP TO BSSC JOINT PER P639 TYP AT 10'-0" OC.
5. TIE-IN NEW PRIMARY EFFLUENT FLOW CONTROL VALVES TO EXIST 2" AHP HEADER THROUGH 1" AHP BRANCH LINE. EXIST VALVE PNEUMATIC INSTRUMENTATION AND CONNECTION SHALL BE DEMOLISHED. CONNECTIONS SHALL BE PER INSTRUMENTATION DRAWINGS AND PNEUMATIC ACTUATOR SPECIFICATION.
6. ELIMINATE RAILING FOR NEW PIPE PENETRATION AT NEAREST VERTICAL MEMBERS, SEE P651 TYP.
7. LOCATION OF HIGH POINT IN 24" ALP PIPING.

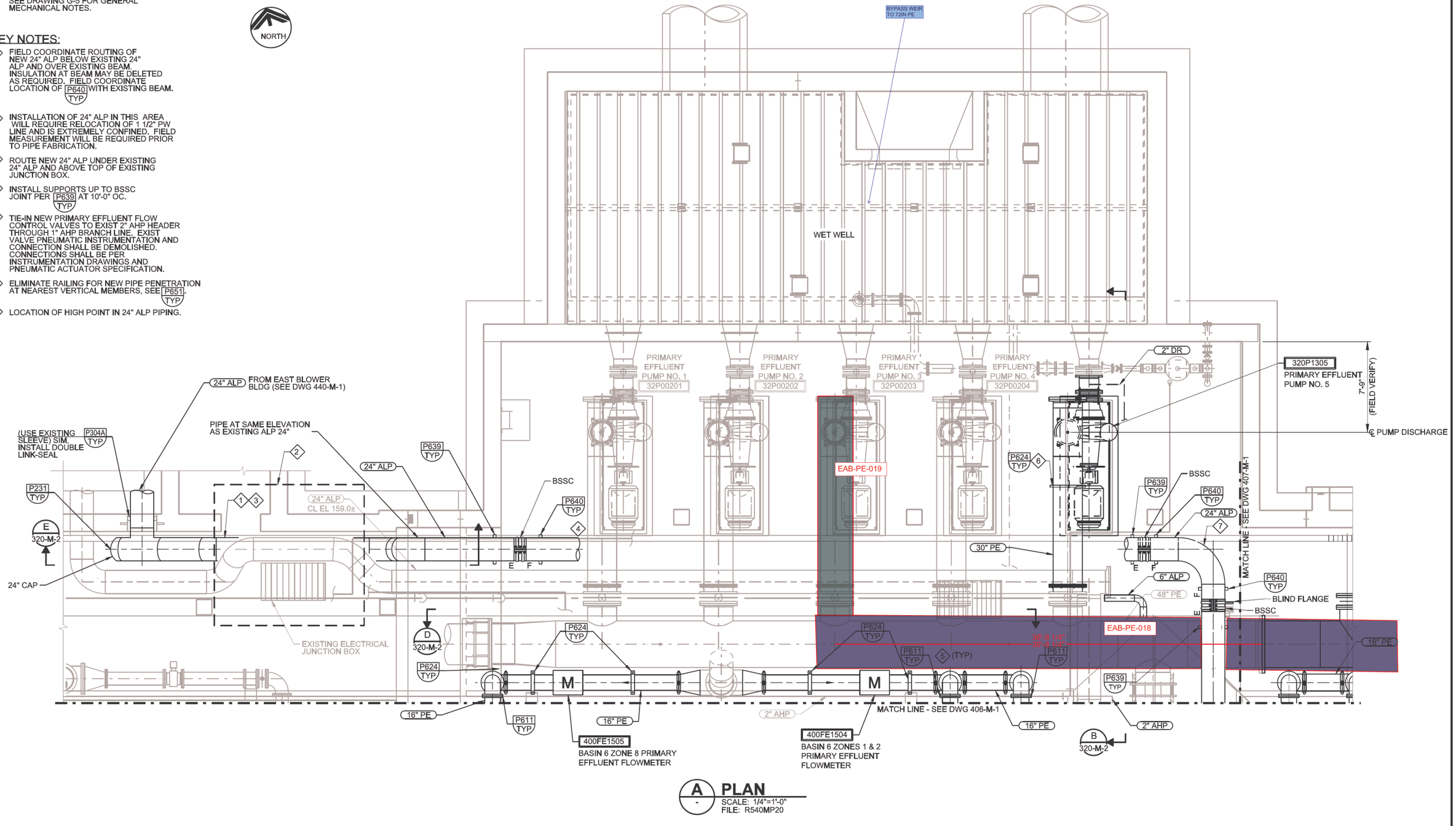

A - PLAN
SCALE: 1/4"=1'-0"
FILE: R540MP20

DATE: 12-MAY-2010 09:41

LAST SAVED BY: ssevarin

REV	DATE	BY	DESCRIPTION

PROJECT NO. FILE NAME: _title_blks.CEL

DESIGNED MZ/JFM
DRAWN EDL
CHECKED TT
DATE MAY 2010

DISCIPLINE ENGINEER
** ORIGINAL STAMPED BY JEFFREY M. McCORMICK 04/09/10 19616PE **

RECORD DRAWING
THESE RECORD DRAWINGS HAVE BEEN PREPARED BASED IN PART ON INFORMATION PROVIDED BY OTHERS

THIS DRAWING WAS PREPARED ONLY FOR THE PROJECT AND SITE SPECIFICALLY IDENTIFIED HEREON AND IS NOT TO BE USED ELSEWHERE

carollo

CleanWater Services
Our commitment is clear.

ROCK CREEK AWTF
EAST AERATION BASINS IMPROVEMENTS PROJECT
MECHANICAL
EAST PRIMARY EFFLUENT PUMP STATION PLAN

VERIFY SCALES
BAR IS ONE INCH ON ORIGINAL DRAWING
0 1"
IF NOT ONE INCH ON THIS SHEET, ADJUST SCALES ACCORDINGLY

JOB NO. 7182A.10
DRAWING NO. 320-M-1
SHEET NO. 29 OF 143

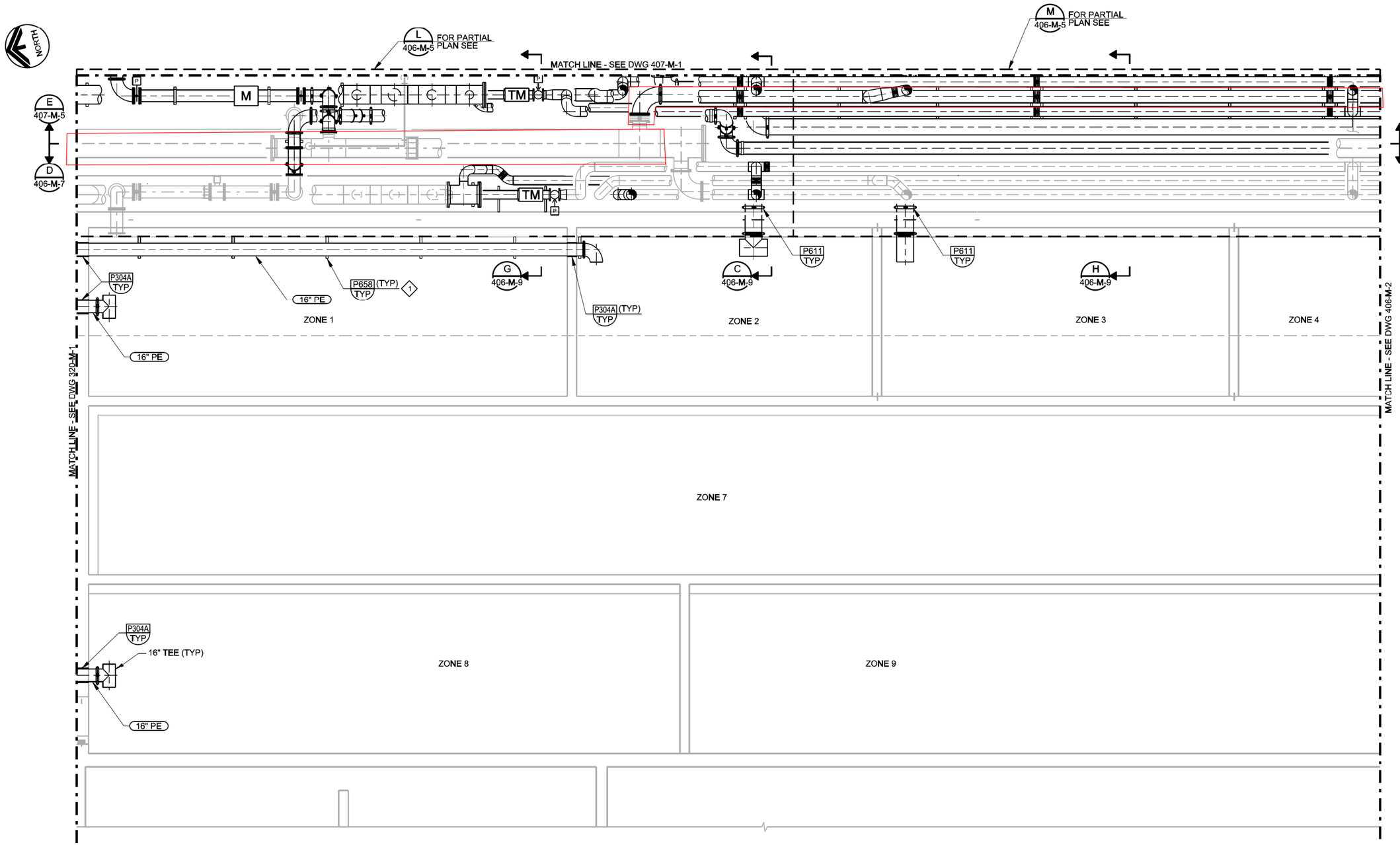

GENERAL NOTES:

A. REFER TO DRAWING 406-M-5 FOR PIPE GALLERY CALLOUTS.

B. SEE DRAWING 406-M-11 FOR DIFFUSER GRID LAYOUTS ON FLOOR OF AERATION BASIN 6.

C. SEE DRAWING G-5 FOR GENERAL MECHANICAL NOTES.

KEY NOTES:

1. INSTALL 6"x1/8" NEOPRENE AND SST PIPE SHIELD AT P658 TYP U-BOLTS SUPPORTS AROUND THE FULL CIRCUMFERENCE OF PIPE

A PARTIAL PLAN

SCALE: 3/16" = 1'-0"
FILE: R540MP20

DATE: 12-MAY-2010 09:44

LAST SAVED BY:

REV	DATE	BY	DESCRIPTION

PROJECT NO.

FILE NAME:

DESIGNED AS/JFM
DRAWN EDL
CHECKED TT
DATE MAY 2010

DISCIPLINE ENGINEER

** ORIGINAL STAMPED BY JEFFREY M. McCORMICK 04/09/10 19616PE **

RECORD DRAWING

THESE RECORD DRAWINGS HAVE BEEN PREPARED BASED IN PART ON INFORMATION PROVIDED BY OTHERS

THIS DRAWING WAS PREPARED ONLY FOR THE PROJECT AND SITE SPECIFICALLY IDENTIFIED HEREON AND IS NOT TO BE USED ELSEWHERE

carollo

Clean Water Services
Our commitment is clear.

ROCK CREEK AWTF

EAST AERATION BASINS IMPROVEMENTS PROJECT

MECHANICAL

AERATION BASIN 6
LOWER LEVEL PARTIAL KEY PLAN (NORTH)

VERIFY SCALES
BAR IS ONE INCH ON ORIGINAL DRAWING
0 1"
IF NOT ONE INCH ON THIS SHEET, ADJUST SCALES ACCORDINGLY

JOB NO. 7182A.10
DRAWING NO. 406-M-1
SHEET NO. 41 OF 143

GENERAL NOTES:

A. REFER TO DRAWING 406-M-6 FOR PIPE GALLERY CALLOUTS.

B. SEE DRAWING G-5 FOR GENERAL MECHANICAL NOTES.

KEY NOTES:

1. RELOCATE EXIST 2" AHP ABOVE EXIST 6" ALP TO EL SHOWN ON P 406-M-6. SUPPORT RELOCATED AHP W/ P660 TYP.
2. CONNECT NEW 6" ALP TO EXIST 6" ALP WITH BSSC FxF MODIFIED SUPPORT WITH P639 TYP ON EITHER SIDE.
3. CONTRACTOR SHALL FIELD COORDINATE THE LOCATION AND SUPPORT OF 14" RAS WITH EXIST CABLE TRAY.

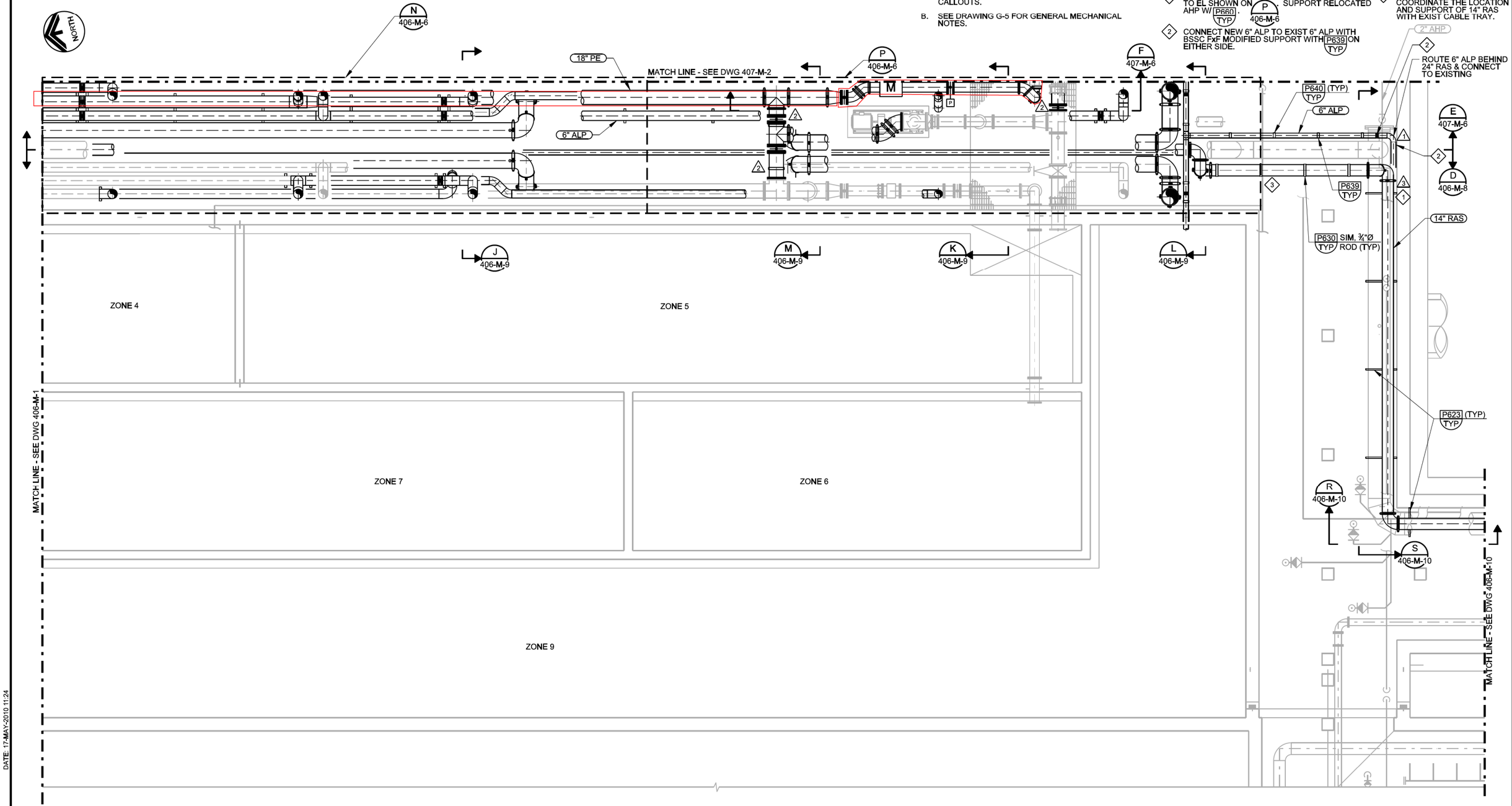

A PARTIAL PLAN

SCALE: 3/16" = 1'-0"
FILE: R540MP20

REV	DATE	BY	DESCRIPTION
3	4/10	CFS	RFI #97
2	4/10	CFS	RFI #55
1	4/10	CFS	RFI #49

PROJECT NO. FILE NAME:

LAST SAVED BY:
DATE: 17-MAY-2010 11:24

DESIGNED AS/JFM
DRAWN EDL
CHECKED TT
DATE MAY 2010

DISCIPLINE ENGINEER

** ORIGINAL STAMPED BY JEFFREY M. McCORMICK 04/09/10 19616PE **

RECORD DRAWING

THESE RECORD DRAWINGS HAVE BEEN PREPARED BASED IN PART ON INFORMATION PROVIDED BY OTHERS

THIS DRAWING WAS PREPARED ONLY FOR THE PROJECT AND SITE SPECIFICALLY IDENTIFIED HEREON AND IS NOT TO BE USED ELSEWHERE

carollo

Clean Water Services
Our commitment is clear.

ROCK CREEK AWTF

EAST AERATION BASINS IMPROVEMENTS PROJECT

MECHANICAL

AERATION BASIN 6
LOWER LEVEL PARTIAL KEY PLAN (SOUTH)

VERIFY SCALES
BAR IS ONE INCH ON ORIGINAL DRAWING
0 1"
IF NOT ONE INCH ON THIS SHEET, ADJUST SCALES ACCORDINGLY

JOB NO. 7182A.10
DRAWING NO. 406-M-2
SHEET NO. 42 OF 143

GENERAL NOTE:

A. SEE DRAWING G-5 FOR GENERAL MECHANICAL NOTES.

KEY NOTE:

1. REMOVE EXIST BF AND INSTALL 16" 90° FLG x FLARE ELBOW.
2. OMNI SLEEVE W /316 SST TIE RODS, NUTS AND BOLTS. COAT W/HIGH SOLIDS EPOXY PER 09960.

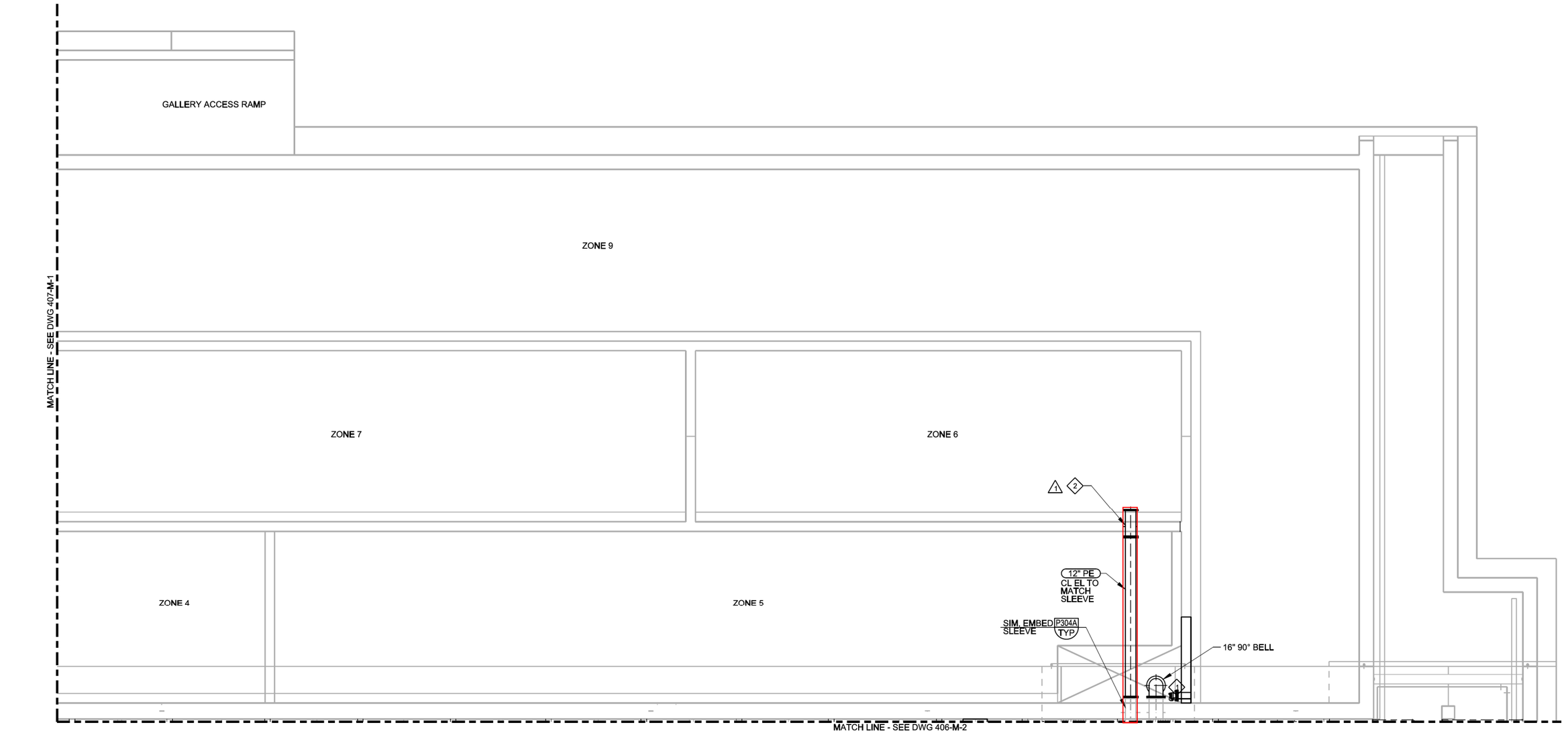

A PARTIAL PLAN

SCALE: 3/16" = 1'-0"
FILE: R540MP20

REV	DATE	BY	DESCRIPTION
1	4/10	CFS	RFI #39

DESIGNED AS/JM
DRAWN EDL
CHECKED TT
DATE MAY 2010

DISCIPLINE ENGINEER

** ORIGINAL STAMPED BY JEFFREY M. McCORMICK 04/09/10 19616PE **

RECORD DRAWING

THESE RECORD DRAWINGS HAVE BEEN PREPARED BASED IN PART ON INFORMATION PROVIDED BY OTHERS

THIS DRAWING WAS PREPARED ONLY FOR THE PROJECT AND SITE SPECIFICALLY IDENTIFIED HEREON AND IS NOT TO BE USED ELSEWHERE

carollo

CleanWater Services
Our commitment is clear.

ROCK CREEK AWTF

EAST AERATION BASINS IMPROVEMENTS PROJECT

MECHANICAL

AERATION BASIN 7
LOWER LEVEL PARTIAL PLAN (SOUTH)

VERIFY SCALES
BAR IS ONE INCH ON ORIGINAL DRAWING
0 1"
IF NOT ONE INCH ON THIS SHEET, ADJUST SCALES ACCORDINGLY

JOB NO. 7182A.10
DRAWING NO. 407-M-2
SHEET NO. 67 OF 143

PROJECT NO. 7182A10 FILE NAME: 7182A10-407-M-002.dgn

LAST SAVED BY: elongoria
DATE: 17-MAY-2010 14:39

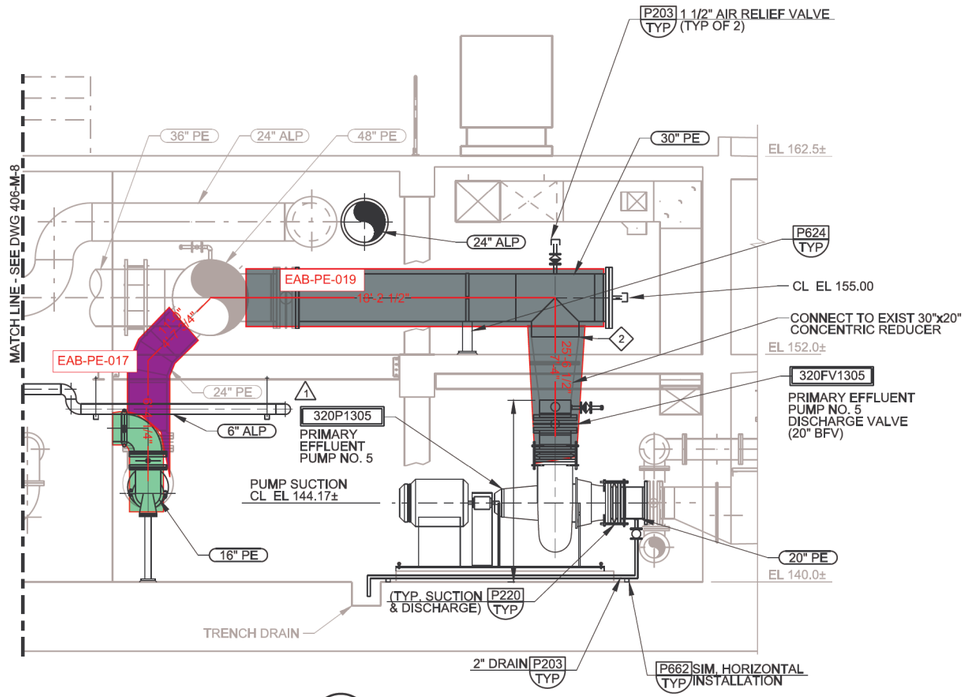

B SECTION
320-M-1 SCALE: 1/4"=1'-0"
FILE: R540MS03

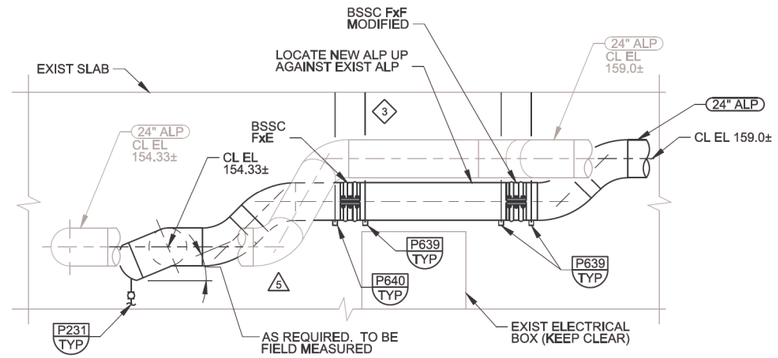

E SECTION
320-M-1 SCALE: 1/4" = 1'-0"
FILE: 7182A10-20-050-302

GENERAL NOTES:

A. ALL PIPE PENETRATIONS PER P304A TYP.

B. ALP PIPING INSULATED PER SPECIFICATION SECTION 15082.

C. CONNECTION TO FLANGED FLOWMETERS SHALL BE WITH GROOVED FLANGE ADAPTER.

D. SEE DRAWING G-5 FOR GENERAL MECHANICAL NOTES.

E. SLOPE PE PIPING BACK FROM BASINS TO 16" HEADER TO ALLOW AIR TO ESCAPE INTO BASIN.

3 F. CAP EXISTING PE PENETRATIONS TO AB6 W/ (2) BLIND FLANGES. FILL SPOOL W/ NON-SHRINK GROUT.

KEY NOTES:

1. TEMPORARILY SUPPORT EXISTING PIPING AFTER REMOVAL OF EXISTING PIPE SUPPORT.
2. CONTRACTOR TO REMOVE EXIST DISHED HEAD AND FIELD WELD POINT OF CONNECTION TO NEW 30" PE, AS REQUIRED.
3. INSTALLATION OF HANGER RODS WILL REQUIRE REMOVAL OF INSULATION ON EXISTING 24" ALP. REPLACE INSULATION PER SPECIFICATION 15082.
2 4. FIELD FIT PIPE SUPPORT BASES AS NEEDED TO AVOID TRENCH.

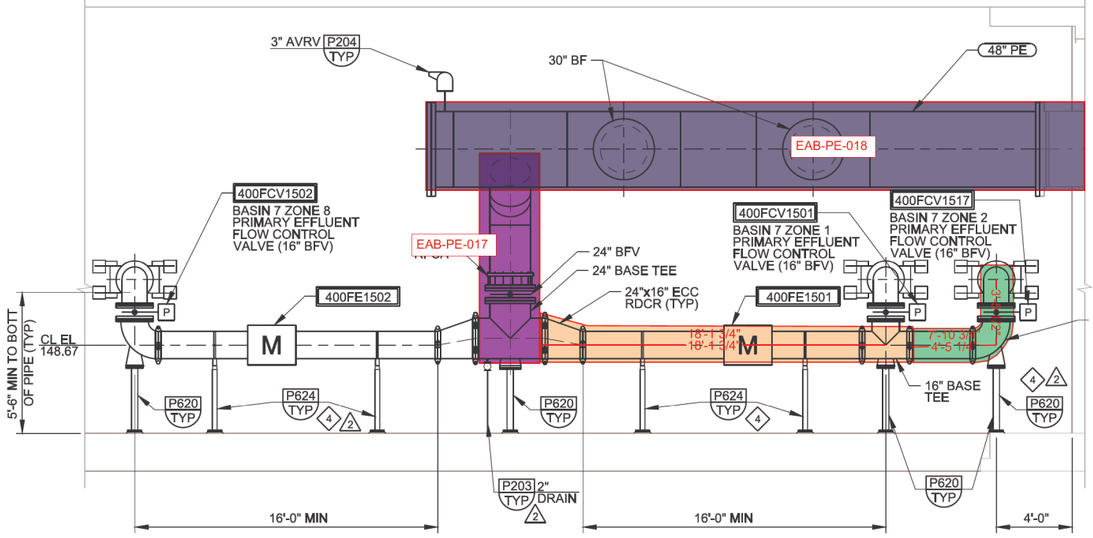

G SECTION
407-M-1 SCALE: 1/4" = 1'-0"
FILE: 7182A10-20-050-301

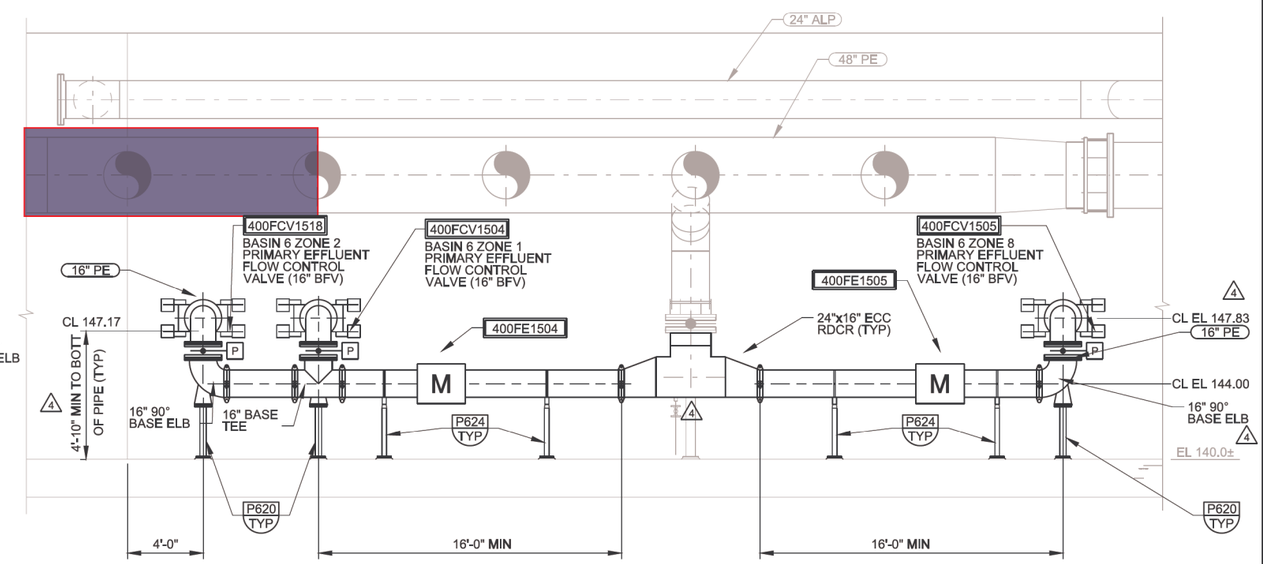

D SECTION
320-M-1 SCALE: 1/4" = 1'-0"
FILE: 7182A10-20-050-301

REV	DATE	BY	DESCRIPTION
5	4/10	CFS	SUBMITTAL 15252A.2
4	4/10	CFS	RFI #169
3	4/10	CFS	RFI #117
2	4/10	CFS	RFI #113
1	4/10	CFS	RFI #50

PROJECT NO. FILE NAME: _title_blks.CEL

DESIGNED MZ/JFM
DRAWN EDL
CHECKED TT
DATE MAY 2010

DISCIPLINE ENGINEER
** ORIGINAL STAMPED BY JEFFREY M. McCORMICK 04/09/10 19616PE **

RECORD DRAWING
THESE RECORD DRAWINGS HAVE BEEN PREPARED BASED IN PART ON INFORMATION PROVIDED BY OTHERS

THIS DRAWING WAS PREPARED ONLY FOR THE PROJECT AND SITE SPECIFICALLY IDENTIFIED HEREON AND IS NOT TO BE USED ELSEWHERE

carollo

Clean Water Services
Our commitment is clear.

ROCK CREEK AWTF
EAST AERATION BASINS IMPROVEMENTS PROJECT
MECHANICAL
EAST PRIMARY EFFLUENT PUMP STATION PLAN AND SECTION

VERIFY SCALES
BAR IS ONE INCH ON ORIGINAL DRAWING
0 1"
IF NOT ONE INCH ON THIS SHEET, ADJUST SCALES ACCORDINGLY

JOB NO. 7182A.10
DRAWING NO. 320-M-2
SHEET NO. 30 OF 143

LAST SAVED BY: sswerin
DATE: 17-MAY-2010 11:09

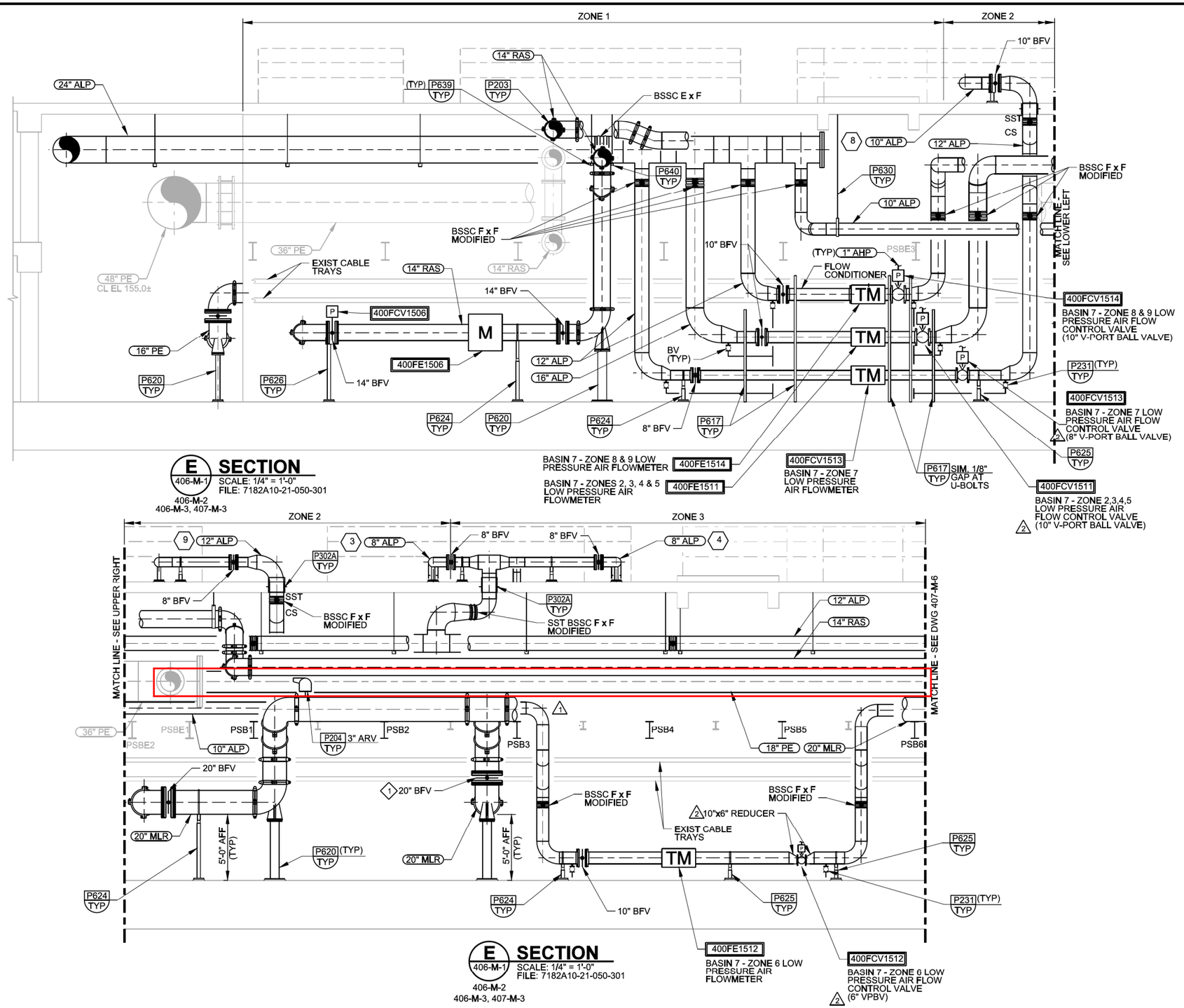

E SECTION
406-M-1 SCALE: 1/4" = 1'-0"
FILE: 7182A10-21-050-301
406-M-2
406-M-3, 407-M-3

E SECTION
406-M-1 SCALE: 1/4" = 1'-0"
FILE: 7182A10-21-050-301
406-M-2
406-M-3, 407-M-3

KEY	
1	ZONE 2 & 3 FEED
2	ZONE 8 & 9 FEED
3	ZONE 2 FEED
4	ZONE 3 FEED
5	ZONE 4 FEED
6	ZONE 5 FEED
7	ZONE 6 FEED
8	ZONE 7 FEED
9	ZONE 8 FEED
10	ZONE 9 FEED

GENERAL NOTES:

A. FLOW CONTROL VALVES ON ALP PIPING SHALL BE V-PORT BALL VALVES.

B. CONNECT PNEUMATIC VALVE ACTUATORS TO 1" AHP BRANCH FROM 2" HEADER PER THE PNEUMATIC VALVE SPECIFICATIONS AND INSTRUMENTATION DRAWINGS AND DETAILS.

C. SEE DRAWING G-5 FOR GENERAL MECHANICAL NOTES.

D. RAILING PENETRATION SHALL BE PER P657 TYP

KEY NOTES:

1 PLACE VALVE HANDLE PERPENDICULAR TO WALL.

DATE: 17-MAY-2010 14:48

LAST SAVED BY: sseverin

REV	DATE	BY	DESCRIPTION
2	4/10	CFS	RFI #138
1	4/10	CFS	RFI #98

PROJECT NO. FILE NAME: _title_blks.CEL

DESIGNED AS/JM
DRAWN MJG/EDL
CHECKED TT
DATE MAY 2010

DISCIPLINE ENGINEER
** ORIGINAL STAMPED BY JEFFREY M. McCORMICK 04/09/10 19616PE **

RECORD DRAWING
THESE RECORD DRAWINGS HAVE BEEN PREPARED BASED IN PART ON INFORMATION PROVIDED BY OTHERS
THIS DRAWING WAS PREPARED ONLY FOR THE PROJECT AND SITE SPECIFICALLY IDENTIFIED HEREON AND IS NOT TO BE USED ELSEWHERE

carollo

CleanWater Services
Our commitment is clear.

ROCK CREEK AWTF
EAST AERATION BASINS IMPROVEMENTS PROJECT
MECHANICAL
AERATION BASIN 7
GALLERY SECTIONS

VERIFY SCALES
BAR IS ONE INCH ON ORIGINAL DRAWING
0 1"
IF NOT ONE INCH ON THIS SHEET, ADJUST SCALES ACCORDINGLY

JOB NO. 7182A.10
DRAWING NO. 407-M-5
SHEET NO. 70 OF 143

KEY	
1	ZONE 2 & 3 FEED
2	ZONE 8 & 9 FEED
3	ZONE 2 FEED
4	ZONE 3 FEED
5	ZONE 4 FEED
6	ZONE 5 FEED
7	ZONE 6 FEED
8	ZONE 7 FEED
9	ZONE 8 FEED
10	ZONE 9 FEED

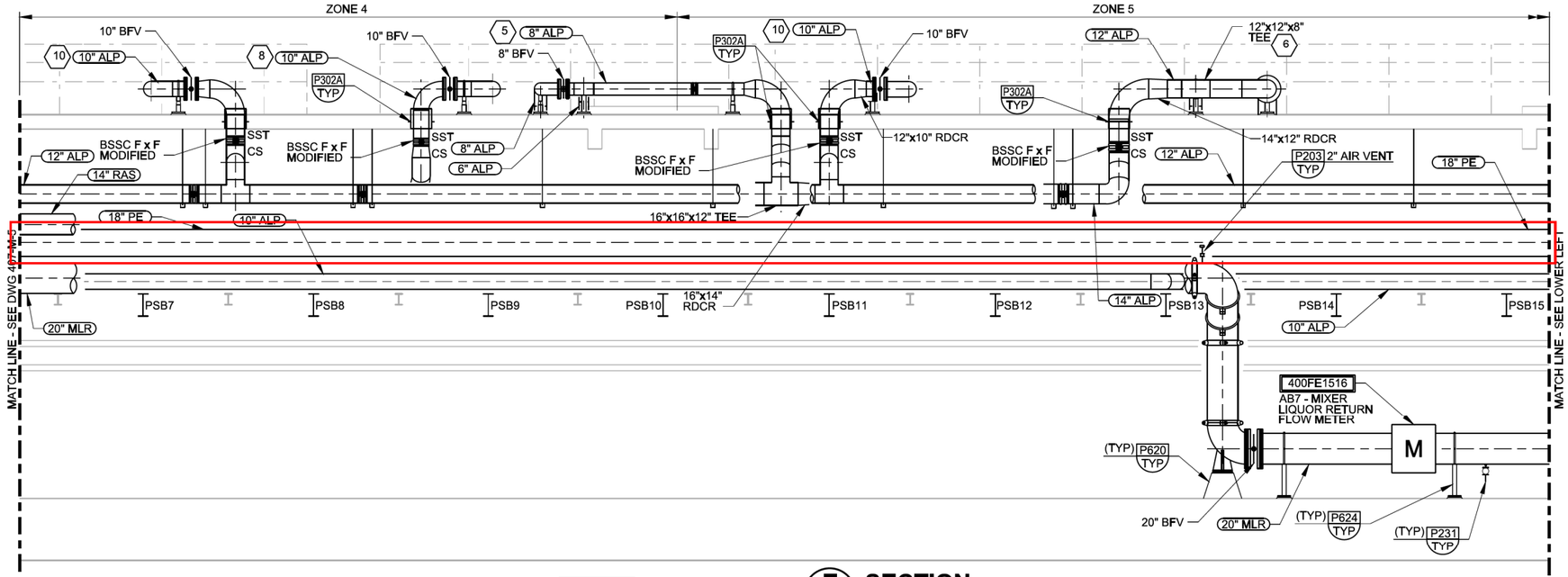

GENERAL NOTES:

A. SUPPORT FOR 20" MLR, 18" PE, 12" PE AND 14" RAS SHALL BE DETAIL ON 406-M-12.

B. SEE DRAWING G-5 FOR GENERAL MECHANICAL NOTES.

KEY NOTES:

1. CONNECT EXISTING 6" ALP USING BSSC FxF MODIFIED.
2. LOCATE PSB16 TO AVOID TEE AND FITTINGS.
2 3. USE 2" SADDLE & 3" BUSHING TO MAKE CONNECTION.

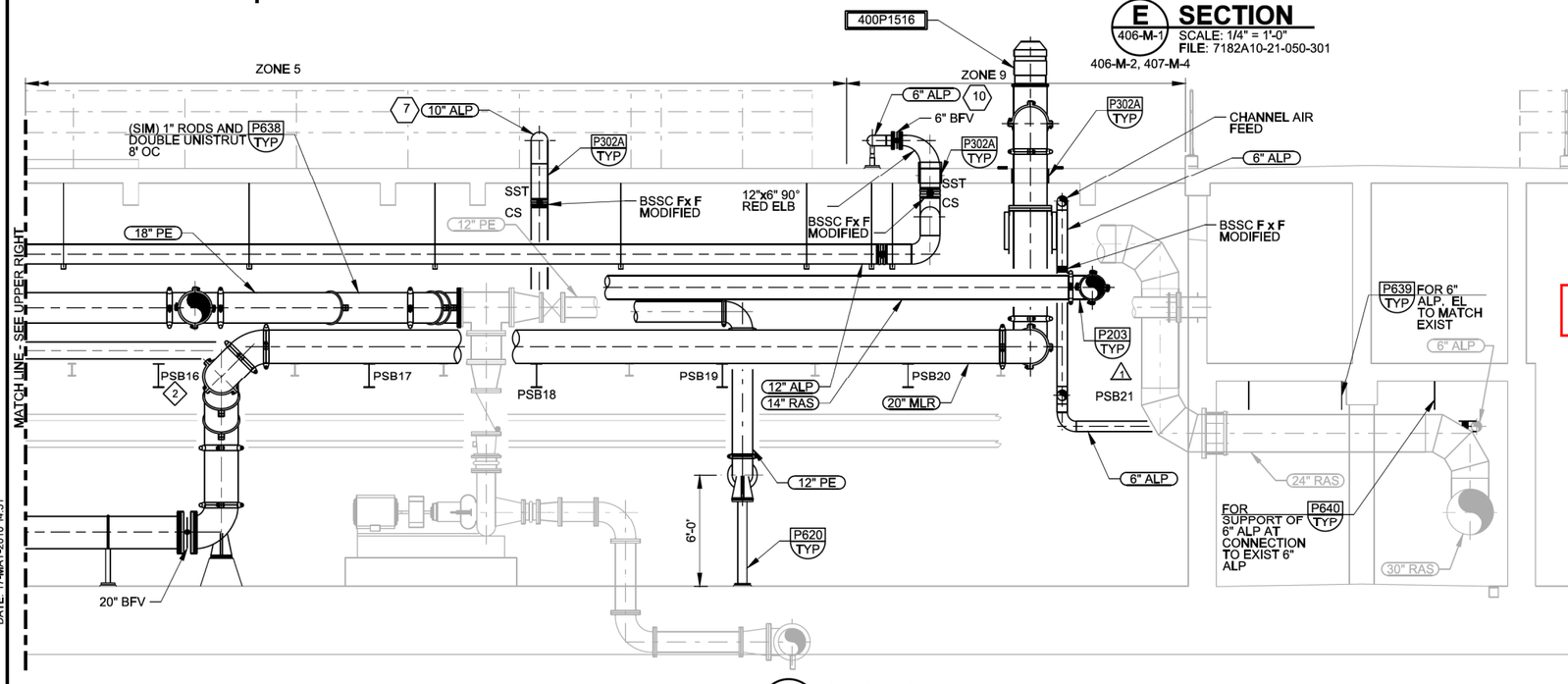

E SECTION

406-M-1 SCALE: 1/4" = 1'-0"
FILE: 7182A10-21-050-301
406-M-2, 407-M-4

406-M-1 SCALE: 1/4" = 1'-0"
FILE: 7182A10-21-050-301
406-M-2
407-M-4

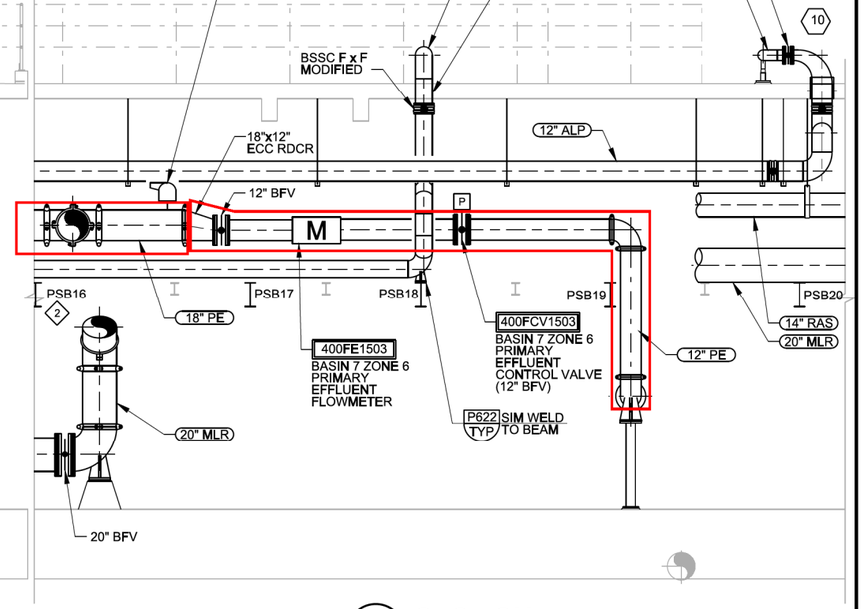

F SECTION

406-M-2 SCALE: 1/4" = 1'-0"
FILE: 7182A10-21-050-301
406-M-6

DATE: 17-MAY-2010 14:51
LAST SAVED BY: ssevern

REV	DATE	BY	DESCRIPTION
2	4/10	CFS	RIF #123
1	4/10	CFS	RIF #86

PROJECT NO. FILE NAME: _title_blks.CEL

DESIGNED AS/JM
DRAWN EDL
CHECKED TT
DATE MAY 2010

DISCIPLINE ENGINEER
** ORIGINAL STAMPED BY JEFFREY M. McCORMICK 04/09/10 19616PE **

RECORD DRAWING
THESE RECORD DRAWINGS HAVE BEEN PREPARED BASED IN PART ON INFORMATION PROVIDED BY OTHERS

THIS DRAWING WAS PREPARED ONLY FOR THE PROJECT AND SITE SPECIFICALLY IDENTIFIED HEREON AND IS NOT TO BE USED ELSEWHERE

carollo

Clean Water Services
Our commitment is clear.

ROCK CREEK AWTF
EAST AERATION BASINS IMPROVEMENTS PROJECT
MECHANICAL
AERATION BASIN 7
GALLERY SECTIONS

VERIFY SCALES
BAR IS ONE INCH ON ORIGINAL DRAWING
0 1"
IF NOT ONE INCH ON THIS SHEET, ADJUST SCALES ACCORDINGLY

JOB NO. 7182A.10
DRAWING NO. 407-M-6
SHEET NO. 71 OF 143

WS WEST SECONDARY CLARIFIERS

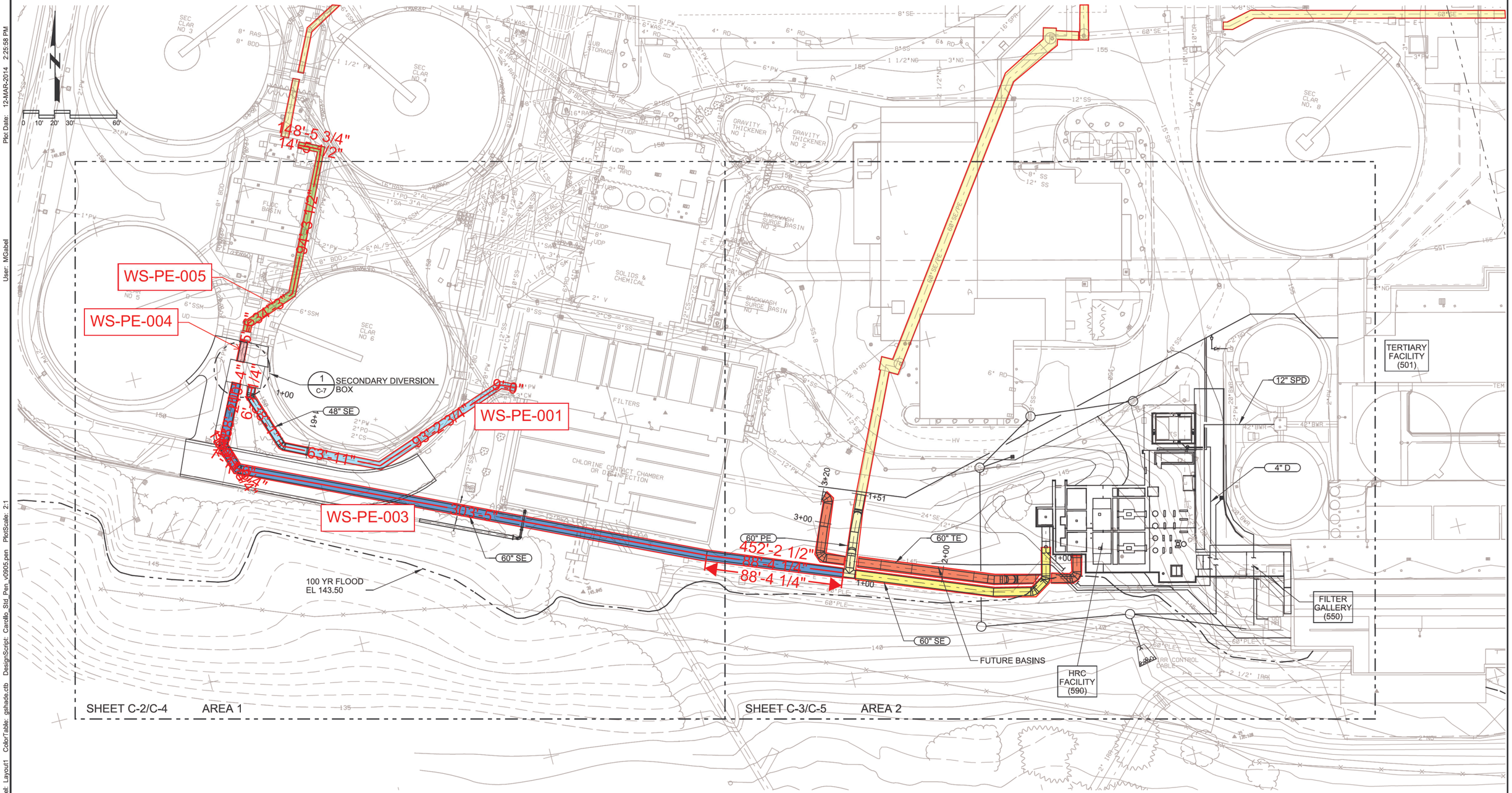

OVERALL SITE PLAN

SCALE: 1" = 30'
FILE: 7182E10-010-101

Plot Date: 12-MAR-2014 2:25:58 PM
User: MGabel
Model: Layout1 ColorTable: gshade.ctb DesignScript: Carollo_Std_Pen_v0905.pen PlotScale: 2:1
LAST SAVED BY: mgabel

REV	DATE	BY	DESCRIPTION
			RECORD DRAWING

DESIGNED RJN
DRAWN MJG
CHECKED DB
DATE FEB 2014

** ORIGINAL STAMPED BY JEFFREY F. McCORMICK FEB 2012 19616PE **

PROJECT ENGINEER

carollo®

CleanWater Services
Our commitment is clear.

CLEAN WATER SERVICES
TERTIARY TREATMENT PROJECT
CIVIL
OVERALL SITE PLAN

VERIFY SCALES
BAR IS ONE INCH ON ORIGINAL DRAWING
0 1"
IF NOT ONE INCH ON THIS SHEET, ADJUST SCALES ACCORDINGLY

JOB NO. 7182E.12
DRAWING NO. C-1
SHEET NO. 22 OF 144

PROJECT NO. 7182E12 FILE NAME: 7182E12-226-C-001.dgn

Plot Date: 12-MAR-2014 2:28:19 PM
User: MGabel
Model: Layout1 ColorTable: gshade.ctb DesignScript: Carollo_Std_Pen_v0905.pen PlotScale: 2:1
LAST SAVED BY: mgabel

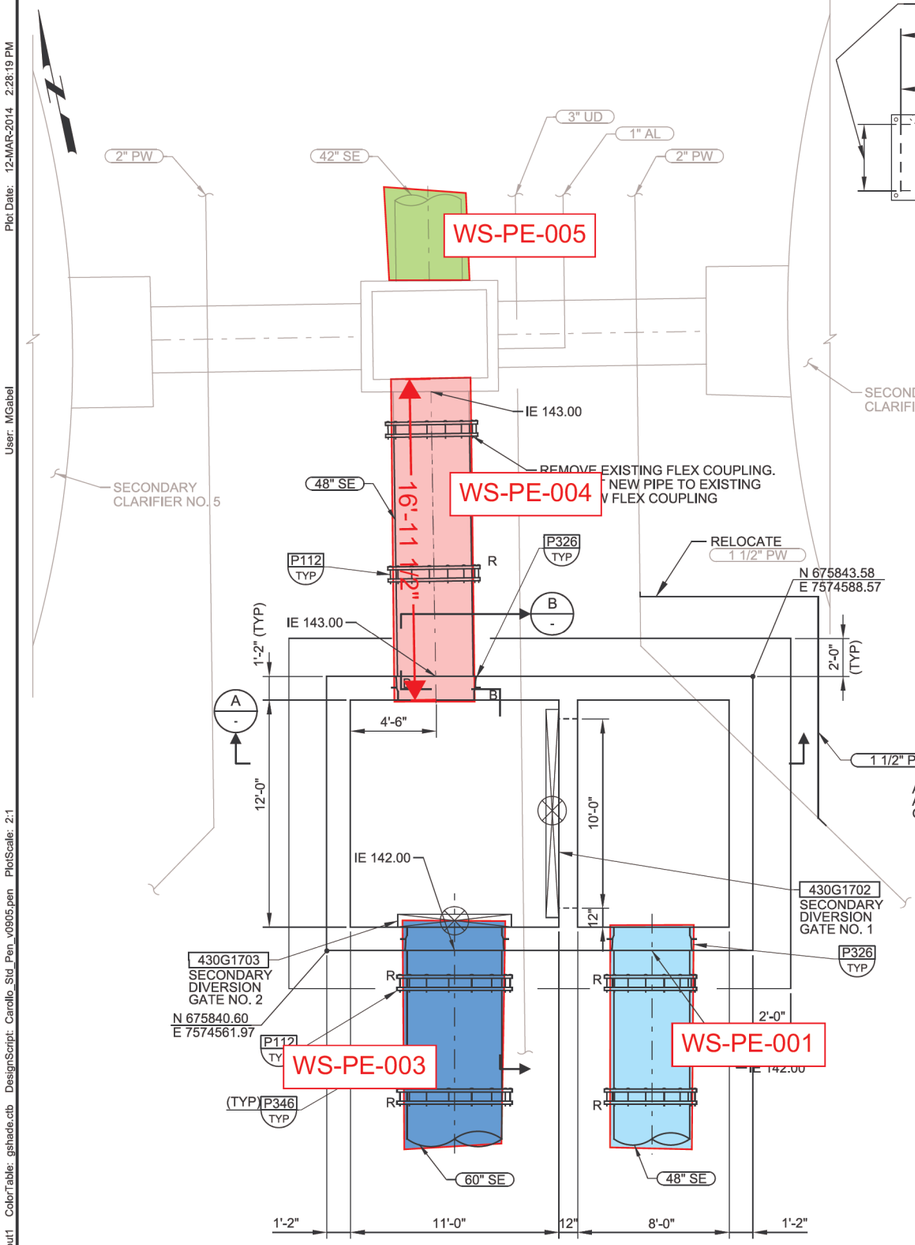

1 SECONDARY DIVERSION BOX SECTIONAL PLAN EL 150.00
C-1
C-2
C-4
SCALE: 1/4"=1'-0"
FILE: 7182E10-226-010-204

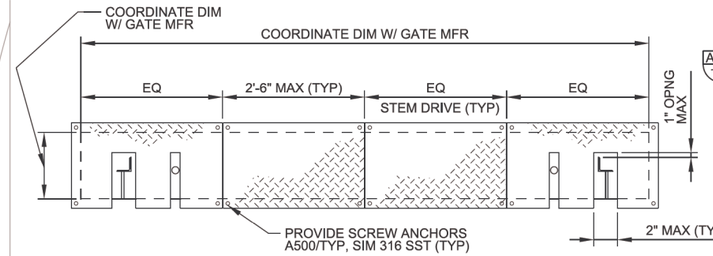

NOTES:
1. A500/TYP SIM - 316 SST. PROVIDE 2 HANDLES EA PLATE SECTION.
2. TREAD PLATE SUPPORTED BY GRATING REBATE AND SUPPORT BEAMS.

1 DETAIL
SCALE: 3/4"=1'-0"
FILE: 7182E10-226-010-402

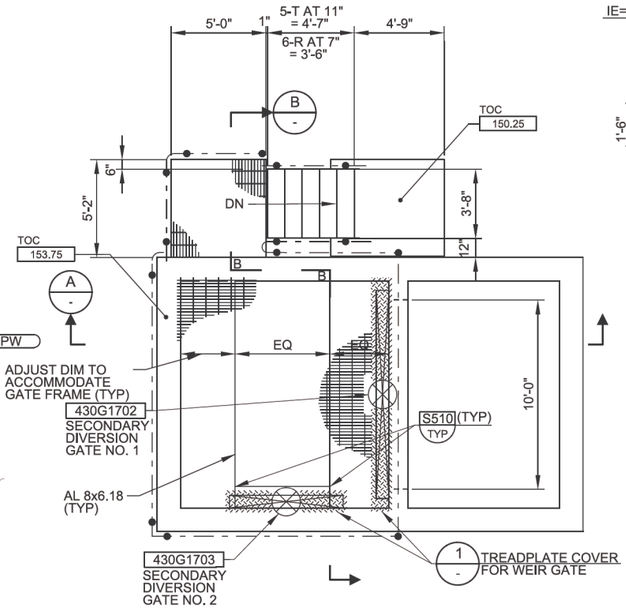

NOTE:
1. GRATING DESIGN LL = 100 PSF.

2 SECONDARY DIVERSION BOX TOP PLAN EL 153.75
SCALE: 1/4"=1'-0"
FILE: 7182E10-226-010-204

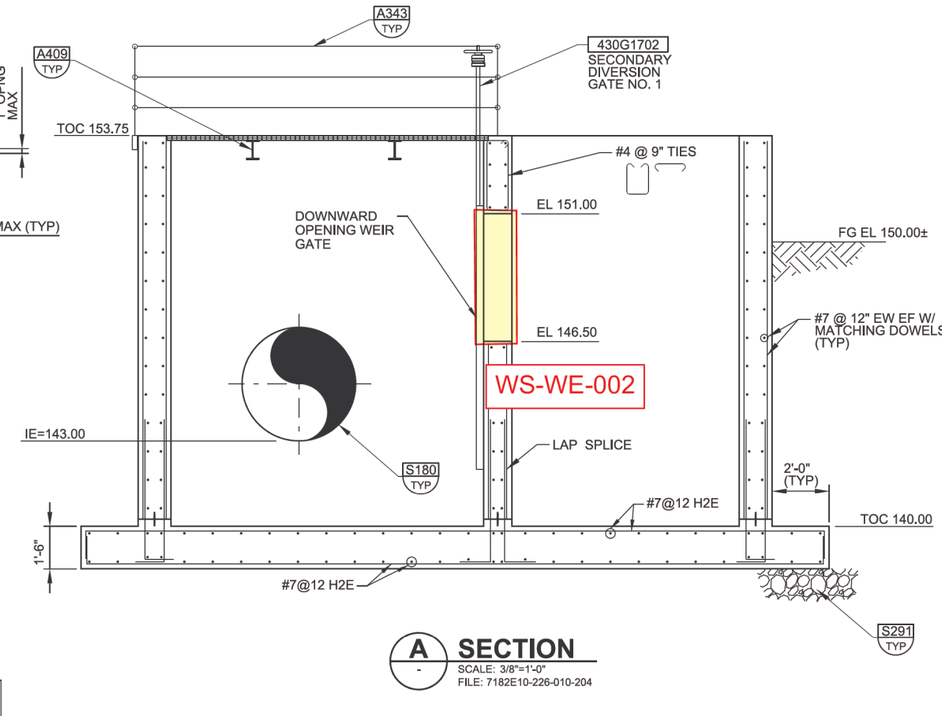

A SECTION
SCALE: 3/8"=1'-0"
FILE: 7182E10-226-010-204

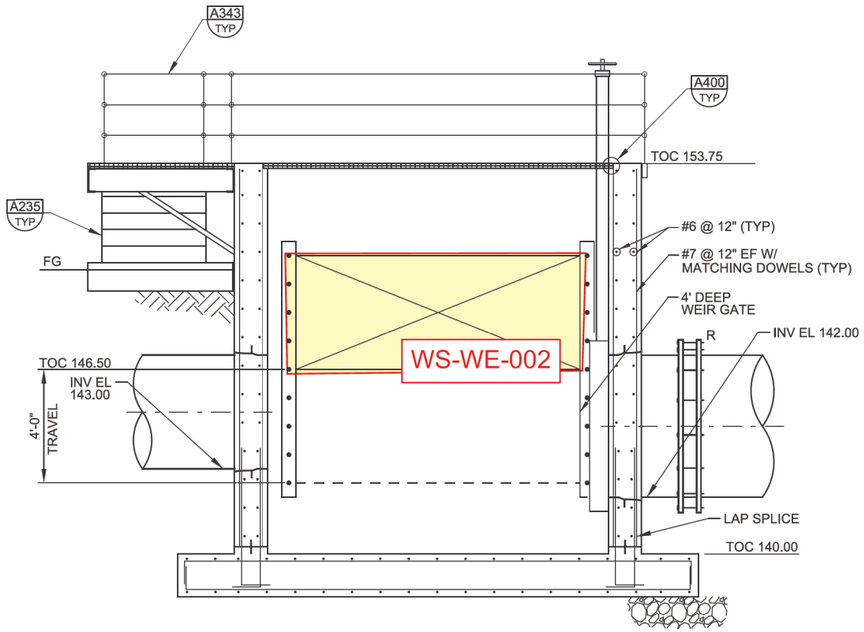

B SECTION
SCALE: 3/8"=1'-0"
FILE: 7182E10-226-010-204

REV	DATE	BY	DESCRIPTION
1	3/9/12	YN	ADDENDUM NO. 1

RECORD DRAWING

DESIGNED RJN
DRAWN MJG
CHECKED DB
DATE FEB 2014

** ORIGINAL STAMPED BY YOUSEF NOURI FEB 2012 85802PE **

PROJECT ENGINEER

carollo

CleanWater Services
Our commitment is clear.

CLEAN WATER SERVICES
TERTIARY TREATMENT PROJECT
CIVIL
SECONDARY DIVERSION BOX PLANS AND SECTIONS

VERIFY SCALES
BAR IS ONE INCH ON ORIGINAL DRAWING
0 1"
IF NOT ONE INCH ON THIS SHEET, ADJUST SCALES ACCORDINGLY

JOB NO. 7182E.12
DRAWING NO. C-7
SHEET NO. 28 OF 144

PROJECT NO. 7182E12 FILE NAME: 7182E12-226-C-007.dgn

JUNCTION BOX NO 1.

JUNCTION BOX NO 2.

WS-PE-007

WS-PE-006

WS-PE-005

WS-PE-004

EXTRA #5 @ 12" X WIDTH OF BOX PLUS 6'-0" HORIZ.

EFFLUENT BOX

PROVIDE 2 EXTRA CONC. SUPPORTS @ EACH EFFLUENT BOX. SEE SH. C-5 FOR LOCATION

30" PE X PE WALL PIPE

#31

SLOPE

#5@12" (TYP.)

FOR LAUNDER TROUGH SUPPORTS SEE SH. C-6

24" FROM SEC. INFL. DISTRIBUTION STRUCTURE

30" FROM SEC. CLARIFIER NO. 3 ℄ 148.25

30" FROM SEC. CLARIFIER NO. 1 ℄ 148.25

30" FROM SEC. CLARIFIER NO. 2 ℄ 148.25

SECONDARY CLARIFIER EFFLUENT JUNCTION BOX NO. 1, SEE SH. C-3 FOR LOCATION

146.00

42" TO RAPID MIX BASIN ℄ 147.83

1" S, SEE SH A-22

30" FROM SEC. CLARIFIER NO. 4 ℄ 148.25

PLAN

3/8" = 1'-0"

BEND #5 BARS 3'-0" INTO WALL AS SHOWN, TYP OF ALL BOXES

SECONDARY CLARIFIER EFFLUENT JUNCTION BOX NO. 2, SEE SH. A-14 FOR LOCATION

EFFLUENT BOX

42" FROM SEC. CLARIFIER NO. 5 ℄ 145.25

42" PE X PE WALL PIPE

SLOPE

#5@12" (TYP.)

EXTRA #5 @ 12" HORIZ. X WIDTH OF BOX PLUS 6'-0", ALT W/ TYP. HOOPS

42" FLOC. BASIN BYPASS ℄ 145.25

42" FROM SEC. CLARIFIER NO. 6 ℄ 145.25

182.50

1½" ALUM. ℄ 147.25

42" SEC. EFFLUENT ℄ 145.00 @ WALL

PLAN

3/8" = 1'-0"

NOTES:

1. FOR ARCHITECTURAL WALL TREATMENT SEE STANDARD DETAIL (30) SH. H-5
2. EFFLUENT BOXES FOR SEC. CLARIFIERS NO. 1 THRU NO. 4 SIMILAR TO SECTION (A C-5/C-5)
3. EFFLUENT BOXES FOR SEC. CLARIFIERS NO. 5 & NO. 6 SIMILAR TO SECTION (B C-5/C-5)
4. FOR TYPICAL SEC. CLARIFIER WALL REINF. SEE SH. C-4.
5. THE 4 PROPELLER METERS, #38D, FOR SECONDARY CLARIFIER EFFLUENT JUNCTION BOX NO. 1 AND THE 2 PROPELLER METERS #38D, FOR SECONDARY CLARIFIER EFFLUENT JUNCTION BOX NO. 2 NOT SHOWN.

ARCH. FINISH REQ'D. SEE DETAIL (30) SH. H-5

3'-6" SQUARE

10"

HANDWHEEL, #31

EL. 156.50

LAUNDER TROUGH SUPPORT

WALL BRACKET #31

EFFLUENT BOX

#5@12" W/STD. 180° HOOK AT TOP ON WALL W/ WALL BRACKET

30" SLUICE GATE #31

WALL THIMBLE #31

30" SEC. EFL. ℄ 148.25

30" SEC. EFFLUENT ℄ 151.00

2'-6"

1'-6"

#5@12"

2-#5 HOOPS

CONC. FILLET

EL. 142.50

EL. 142.67

SEC. CLARIFIER NO. 3

TOP OF CONC. FILL EL. 146.50

6" (TYP.)

24" FROM SEC. INFL. DIST. STRUCTURE ℄ 144.25

12'-0"

℄ STRUCTURE

#5@12" DWLS. (TYP.)

1'-6"

6"

SEE TYP. WALL SECTION SH. C-4

10'-0"

8" 2'-4" 2'-0" 2'-0" 2'-4" 8"

EL. 156.50

#5@12" ALL WALLS LOCATE SPLICE @ CTR. EACH 6'-0" WIDE WALL (TYP.)

LAUNDER TROUGH SUPPORT

#5@12" (TYP ALL WALLS)

#5@12" DWLS. (TYP. ALL WALLS)

EL. 146.00

#5@12" CTR.

NOTE:
SCUM BAFFLE & WEIR PL NOT SHOWN; SEE SH. C-6.

SECTION

3/8" = 1'-0"

WALL BRACKET #31

3'-6"

10"

SEE CHEMICAL DIFFUSER DETAIL (1 C-5/C-6)

EL. 152.75

42" SLUICE GATE W/ HANDWHEEL & WALL BRACKET #31

℄ 148.00

42" PE X PE WALL PIPE

SEC. CLARIFIER NO. 5

CONC. FILLET

2'-6"

1'-6"

#5@12"

2-#5 HOOPS

TOP OF CONC. FILL EL. 142.75

EL. 139.75

#5@12" DWLS. (TYP.)

SEE TYP. WALL SECTION SH. C-4

EFFLUENT BOX

#5@12" (TYP THREE WALLS) W/STD. 180° HOOK AT TOP ON WALL W/ WALL BRACKET

INTERMEDIATE GRADE SEE SH. A-14

42" FROM SEC. CLARIFIER NO. 5 ℄ 145.25

42" THIMBLE, #31

#5@12" DWLS. (TYP. ALL WALLS)

140.50

8" 3'-0" 3'-0" 8"

℄ STRUCTURE

PC-2 (TYP) @ 4'-0" MAX. O.C.

EL. 153.76

#5@12" ALL WALLS LOCATE SPLICE @ CTR. OF EACH 6'-0" WIDE WALL (TYP.)

#5@12 (TYP. ALL WALL)

42" FROM SEC. CLARIF. NO. 6 ℄ 145.25

4'-9"

9"

6" T'4" 6" (TYP ALL AROUND)

SECTION

3/8" = 1'-0"

REGISTERED PROFESSIONAL ENGINEER 7753 OREGON JULY 13, 1973 DENNIS A. SANDHETTO

CH2M HILL

DES. FMT/CAG							
DR. MDR/DSP							
CHK. GFD/WCM							
APPD. DAS	1	APR'78	RECORD DRAWING		JLR	LJB	
	NO.	DATE	REVISION		BY	APPD.	

UNIFIED SEWERAGE AGENCY
WASHINGTON COUNTY, OREGON
ROCK CREEK
ADVANCED WASTEWATER TREATMENT PLANT

CONTRACT NO. 38 SCHEDULE B
CLARIFICATION AND CHEMICAL TREATMENT
SECONDARY CLARIFIER EFFLUENT BOXES
STRUCTURAL AND MECHANICAL - PLANS AND SECTIONS

SHEET C-5
OF 13
DATE JAN. 1978
DWG. NO. C8892-20

MATCHLINE SEE SH. A-17

BREAK P/B N 6291 E 2806

INVT. 144.6

10" AERATION BASIN DRAIN

TO RAW SEWAGE PUMP STATION

60" AERATION BASIN EFFLUENT *14A ℄ 145.50

24" RAS ℄ 150.00

8" UD. FROM IDIGESTER

MATCHLINE, SEE SH. A-17

MH-3 38C
F.L. IN 142.15 (EAST)
F.L. IN 196.77 (SOUTH)
FL. OUT 142.05

8" IN-PLANT WASTE

MH-4 38C
FL. IN 142.81
FL. OUT 142.71

INVT. 136.0

SD/S

75.0'

BREAK B/CAT MH
N 6242
E 2946

12" BWR

SECONDARY CLARIFIER NO.1

SECONDARY CLARIFIER NO.2

8" IN-PLANT WASTE

MAINTENANCE BUILDING

R=50.0'

R=25.0'

6" (TYP.)

INVT. 136.5

INVT. 136.0

INVT. 137.5

WALK-WAY

4"

SSM

FL. 147.26

6" (TYP.)

24" RAS

4" SD/S

4" C/S

6"

4" T/S

BREAK C/E
N 6081
E 3099

BREAKS SEE NOTE

UDP

UD. FROM DIGESTER

INVT. 135.5

INVT. 135.4

INVT. 139.5
℄ 138.62

6" (TYP)

INVT. 136.0

INVT. 134.9

INVT. 144.27

INVT. 144.07

℄ 148.25

℄ 146.75
℄ 145.00
℄ 148.25

℄ 135.50

℄ 135.00

INVT. 134.5

INVT. 135.3

℄ 134.00

DEWATERING PUMP STATION NO.1 *38B

SECONDARY CLARIFIER INFLUENT DISTRIBUTION BOX

⑭ 8"X6"

INVT. 143.86

℄ 151.00

℄ 145.25

℄ 148.50

℄ 149.00

℄ 136.00

℄ 148.50

DEWATERING PUMP STATION NO.2 *38B

LUBRICANT STORAGE

℄ 142.50

WAS

(FUTURE)

148.50

SPILL STORAGE TANK SEE SH. G-80

8" THICKENER EFFLUENT SEE SH. E-39

DEWATERING PUMP STATION NO.4

INVT. 130.25

WASTE ACTIVATED SLUDGE MEASURING BOX

⑨ 8"X8"X6"
INVT. 134.5

WALKWAY

1½" CONN. THROUGH SIDEWALK

WS-PE-007

℄ 138.62

℄ 150.00

℄ 148.00

8" TO STORM SEWER

℄ 144.75

℄ 148.25

℄ 147.78

WS-PE-006

WS-PE-012

℄ 134.00

℄ 134.00

℄ 145.50

℄ 144.00

℄ 141.50

℄ 145.00

GRAVITY THICKENER NO.1

GRAVITY THICKENER NO.2

6" THICKENER EFFLUENT SEE SH. E-39

℄ 144.00 @ WALL

MH 5
FL. OUT
143.55

INVT. 130.60

UDP

4-RAS
℄ 145.50 @ WALL

INVT. 131.00 (TYP.)

℄ 137.50 @ WALL

4" BWR DRAIN

BACKWASH SURGE BASIN NO.2

SOLIDS & CHEMICAL COMPLEX

℄ 146.25

℄ 143.60

SECONDARY CLARIFIER NO.3

SECONDARY CLARIFIER NO.4

SECONDARY CLARIFIER EFFLUENT JUNCTION BOX NO.1

RAPID MIX BASIN

℄ 138.50

SURGE BASIN INFLUENT DISTRIBUTION BOX

BACKWASH SURGE BASIN NO.1

MATCHLINE, SEE SH. A-19

MATCHLINE, SEE SH. A-19

NOTES:

1. BREAK COORDINATES ARE APPROXIMATE. ACTUAL BREAKS WILL BE STAKED IN THE FIELD BY THE ENGINEER.
2. RUN PIPE TO BREAK ACCORDING TO SCHEDULE. EITHER CAP AND STAKE PIPE END OR CONNECT TO EXISTING PIPE AS APPROPRIATE.
3. ALL UDP INVERTS SHOWN ON SECONDARY CLARIFIER NO. 1 TYP. FOR SECONDARY CLARIFIERS NO. 2 THROUGH NO. 4.
4. STORM DRAIN NOT SHOWN, SEE SH. A-15

BREAK LINE "K-K" ; NORTH TO SOUTH

PIPE	BREAK	NORTHING	EASTING
UD	B/C	6087	3021
BWR	"	6065	3011
RAS	"	6056	3007
WAS	"	6055	3006
BD	"	6045	3002
RAS	"	6034	2997
BD	"	6032	2996
RAS	"	6029	2994

BREAK LINE "L-L" ; NORTH TO SOUTH

PIPE	BREAK	NORTHING	EASTING
RAS	B/C	5964	2951
BD	"	5960	2949
AM/S	"	5956	2947
RAS	"	5953	2945
RAS	"	5949	2943
BSM	"	5944	2941

5. ALL UDP BENEATH THE SECONDARY CLARIFIERS IS PERFORATED. UDP OUTSIDE OF THE SECONDARY CLARIFIERS TO THE DEWATERING PUMP STATION NO. 2 IS NOT PERFORATED.

PLAN

1" = 20'

REGISTERED PROFESSIONAL ENGINEER 7753 OREGON JULY 19, 1979 DENNIS A. SANDRETTO

CH2M HILL

DES. FMT
DR. GAM
CHK. ELS/WCM
APPD. DAS

NO.	DATE	REVISION	BY	APPD.
1	APR 78	RECORD DRAWING	JLR	LJB

UNIFIED SEWERAGE AGENCY
WASHINGTON COUNTY, OREGON
ROCK CREEK
ADVANCED WASTEWATER TREATMENT PLANT

CONTRACT NO. 38 ALL SCHEDULES
GENERAL INFORMATION
PIPING PLAN

SHEET A-18
OF 23
DATE JAN. 1978
DWG. NO. C8892-20

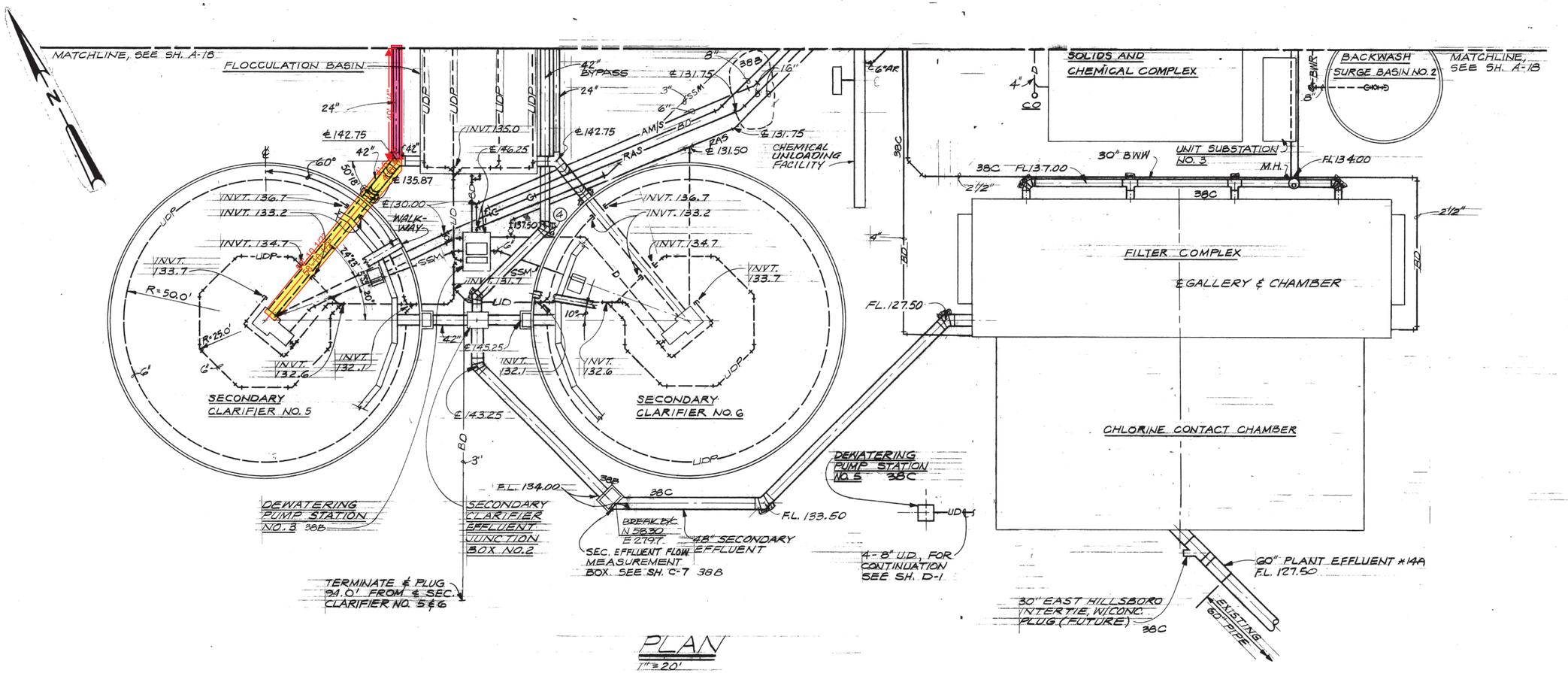

PLAN
1"=20'

NOTES:
1. BREAK COORDINATES ARE APPROXIMATE. ACTUAL BREAKS WILL BE STAKED IN THE FIELD BY THE ENGINEER.
2. RUN PIPE TO BREAK ACCORDING TO SCHEDULE. EITHER CAP AND STAKE PIPE END OR CONNECT TO EXISTING PIPE AS APPROPRIATE.

REGISTERED PROFESSIONAL ENGINEER 7753 OREGON JULY 19, 1973 DENNIS A. SANDRETTO

CH2M HILL

DES. FMT/LJB
DR. KJR
CHK. ELS/WCM
APPD. DAS

NO.	DATE	REVISION	BY	APPD.
1	APR 78	RECORD DRAWING	JLR	LJB

UNIFIED SEWERAGE AGENCY
WASHINGTON COUNTY, OREGON
ROCK CREEK
ADVANCED WASTEWATER TREATMENT PLANT

CONTRACT NO. 38 ALL SCHEDULES
GENERAL INFORMATION
PIPING PLAN

SHEET A-19
OF 23
DATE JAN. 1976
DWG. NO. C8892-20

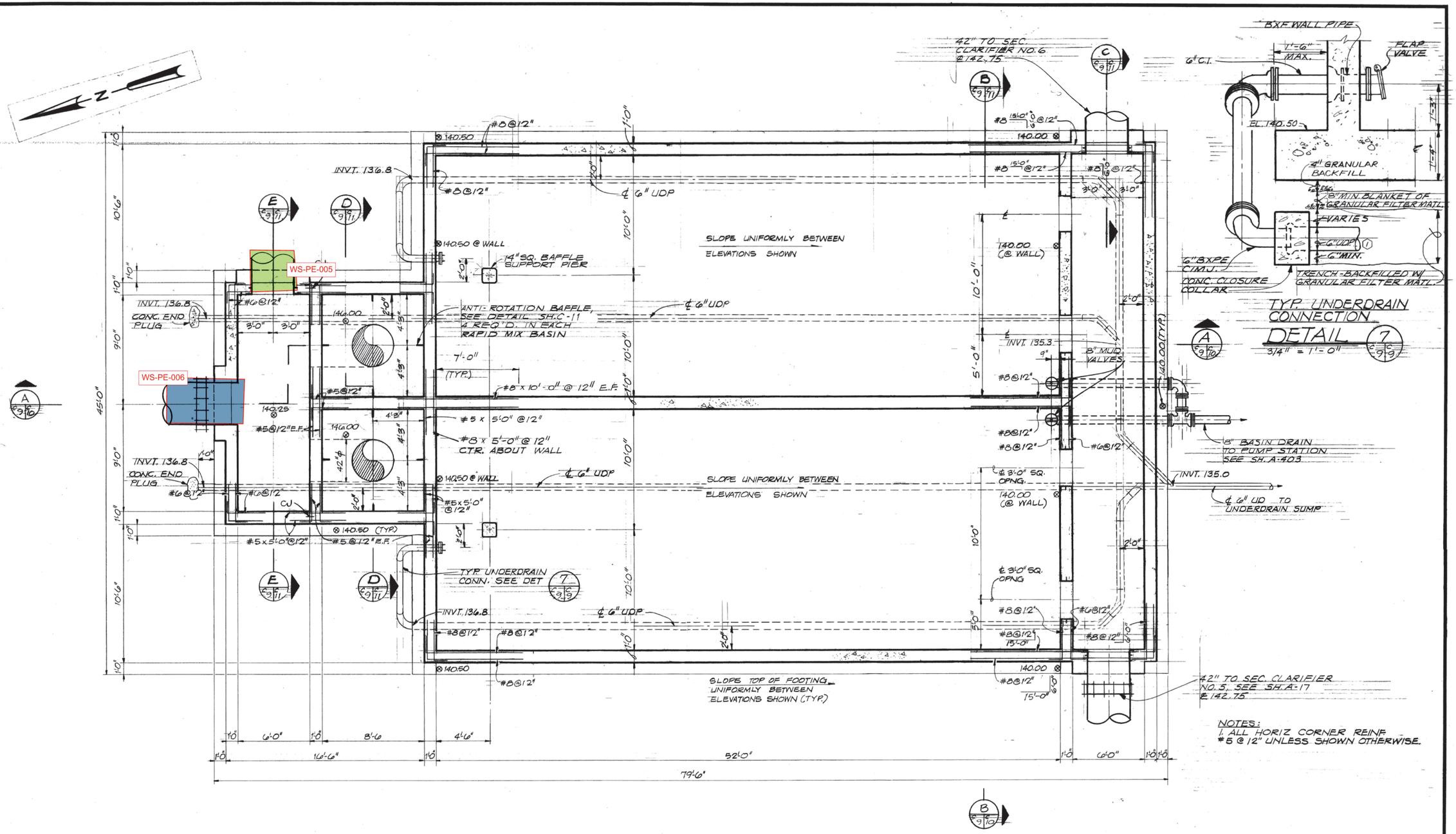

NOTES:
1. ALL HORIZ CORNER REINF. #5 @ 12" UNLESS SHOWN OTHERWISE.

FOUNDATION PLAN

1/4" = 1'-0"

REGISTERED PROFESSIONAL ENGINEER 4478 OREGON OCT. 30, 1980 GEORGE F. DOTSON

CH2M HILL

DES. PKF/FMT						
DR. DLA						
CHK. SCL	1	APR 78	RECORD DRAWING	JLR	LJB	
APPD. DAS	NO.	DATE	REVISION	BY	APPD.	

UNIFIED SEWERAGE AGENCY
WASHINGTON COUNTY, OREGON
ROCK CREEK
ADVANCED WASTEWATER TREATMENT PLANT

CONTRACT NO. 38 SCHEDULE B
CLARIFICATION AND CHEMICAL TREATMENT
RAPID MIX AND FLOCCULATION BASINS
STRUCTURAL AND MECHANICAL - FOUNDATION PLAN

SHEET C-9 OF
DATE
DWG. NO.

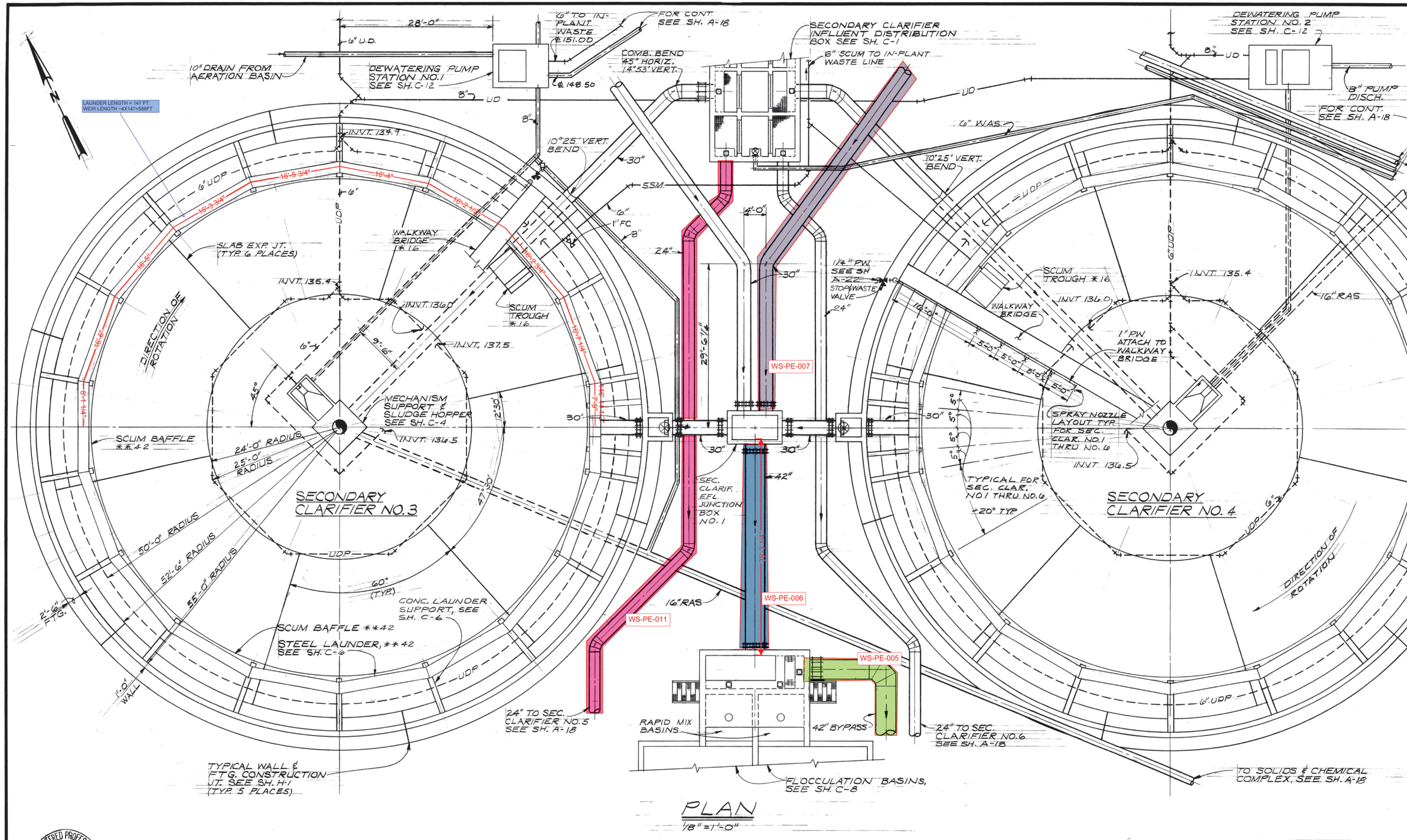

REGISTERED PROFESSIONAL ENGINEER 7753 OREGON JULY 13, 1979 DENNIS A. SANDRETTO

CH2M HILL

DES. FMT					
DR. DSP					
CHK. GFD/WCM	1	APR 78	RECORD DRAWING	JLR	LJB
APPD. DAS	NO.	DATE	REVISION	BY	APPD.

UNIFIED SEWERAGE AGENCY
WASHINGTON COUNTY, OREGON
ROCK CREEK
ADVANCED WASTEWATER TREATMENT PLANT

CONTRACT NO. 38 SCHEDULE B
CLARIFICATION AND CHEMICAL TREATMENT
SECONDARY CLARIFIERS
STRUCTURAL AND MECHANICAL - PLAN

SHEET C-3
OF 13
DATE JAN. 1978
DWG. NO. C8892-20

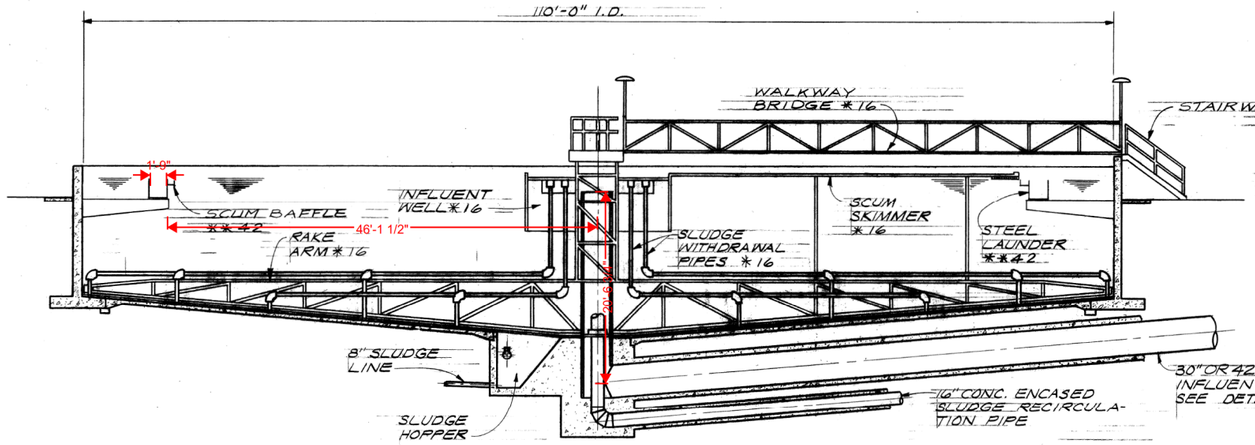

SECONDARY CLARIFIER COMPOSITE SECTION

1/8" = 1'-0"

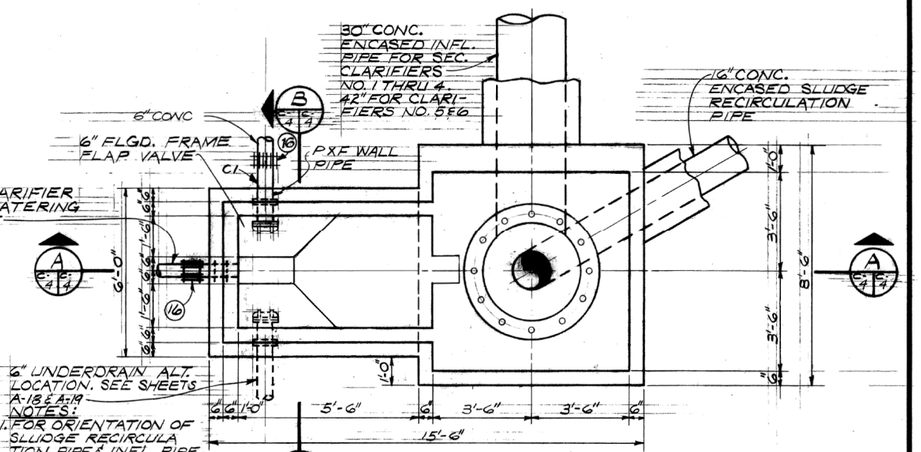

TYPICAL MECHANISM SUPPORT SLUDGE HOPPER

3/8" = 1'-0"

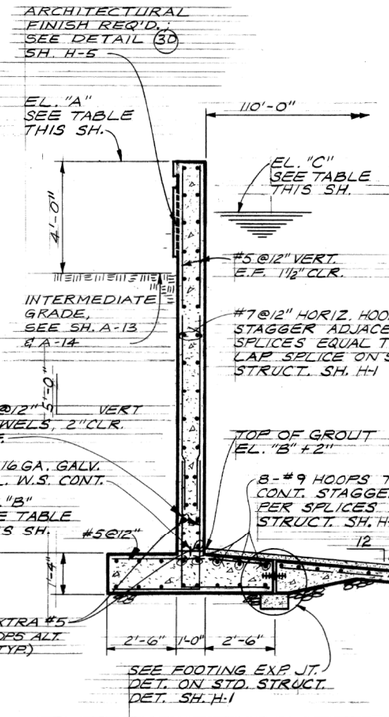

EL.	SEC. CLARIFIERS NO. 1 THRU 4	SEC. CLARIFIERS NO. 5 & 6
"A"	156.50	153.75
"B"	142.50	139.75
"C"	154.93	152.05
"D"	138.12	135.39

NOTE:
SEE SH. C-6 FOR ADDITIONAL WALL REINF. AT CONC. SUPPORTS FOR LAUNDER TROUGHS.

TYPICAL WALL SECTION

3/8" = 1'-0"

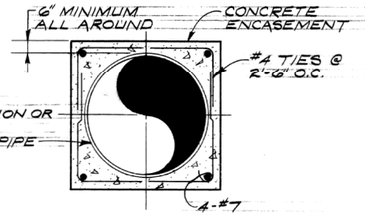

CONCRETE ENCASEMENT DETAIL

3/8" = 1'-0"

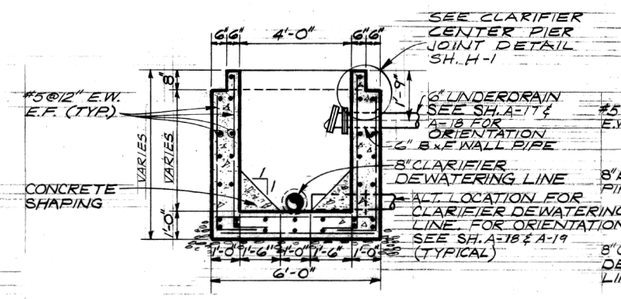

SECTION B

3/8" = 1'-0"

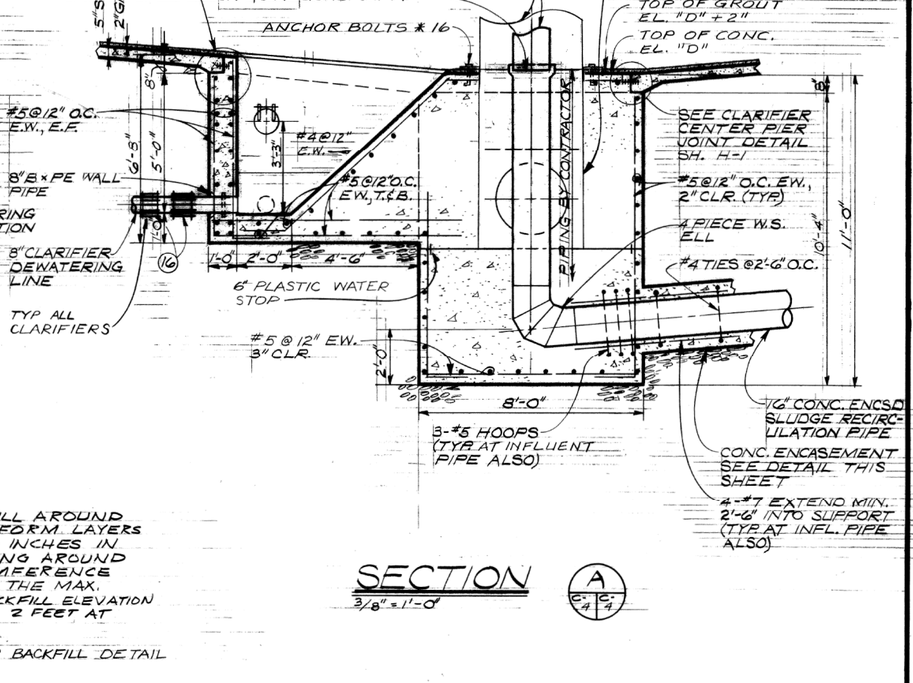

SECTION A

3/8" = 1'-0"

NOTES:

1. PLACE THE BACKFILL AROUND CLARIFIERS IN UNIFORM LAYERS NOT EXCEEDING 6 INCHES IN THICKNESS, WORKING AROUND THE ENTIRE CIRCUMFERENCE WITH EACH LAYER. THE MAX. DIFFERENCE IN BACKFILL ELEVATION SHALL NOT EXCEED 2 FEET AT ANY TIME.
2. SEE SHEET H-15 FOR BACKFILL DETAIL

REGISTERED PROFESSIONAL ENGINEER 7783 OREGON JULY 13, 1973 DENNIS A. SANDRETTO

CH2M HILL

DES. FMT/CAG
DR GAM/DSP
CHK. GFD/WCH
APPD. DAS

NO.	DATE	REVISION	BY	APPD.
1	APR 78	RECORD DRAWING	ULR	LJB

UNIFIED SEWERAGE AGENCY
WASHINGTON COUNTY, OREGON
ROCK CREEK
ADVANCED WASTEWATER TREATMENT PLANT

CONTRACT NO. 38 SCHEDULE B
CLARIFICATION AND CHEMICAL TREATMENT
SECONDARY CLARIFIERS
STRUCTURAL AND MECHANICAL - PLAN AND SECTIONS

SHEET C-4
OF 13
DATE JAN. 1976
DWG. NO. C8892-20

CadNet
Date 03-04-96
Drafter T.SMITH
Drawing Name RCS-103V.DWG
Engineer G. JONES
Job Number 00039-305-102

VALVES LOCATION DIMENSIONS			
(A)	=	21'–8"	2" PW
(B)	=	33'–7"	2" PW
(C)	=	37'–7"	6" PW
(D)	=	15'–6"	6" PW
(E)	=	41'–4"	PW
(F)	=	45'–6"	PW
(G)	=	45'–7"	PW
(H)	=	47'–8"	PW
(I)	=	6'–1"	RAS
(J)	=	15'–8"	8" BDD
(K)	=	15'–1"	8" BDD
(L)	=	24'–6"	RAS
(M)	=	14'–7"	8" BDD
(N)	=	15'–2"	8" BDD
(O)	=	2'–10"	2" PW
(P)	=	11'–8"	2" PW
(Q)	=	12'–9"	6" PW
(R)	=	19'–0"	6" PW
(S)	=	10'–0"	2" PW
(T)	=	20'–0"	2" PW

NOTES:

1. CONNECT TO EXISTING 30"ABE PIPE JOINT. VERIFY EXIST PIPE ALIGNMENT IN FIELD PRIOR TO FABRICATION OF NEW PIPING (TYP 4)
2. ALL ELBOWS ARE 45° OR 90° UNLESS NOTED OTHERWISE
3. DIMENSIONS SHOWN ARE TO OUTSIDE EDGE OF WALL AND ℄ OF PIPE
4. SLOPE PIPING UNIFORMLY BETWEEN IE'S SHOWN.
5. ALL PARTIALLY DEMOLISHED OR ABANDONED PIPE TO BE SEALED W/MATCHING NON THRUSS RESTRAINED PLUG OR CAP AT OPEN END(S)(TYP)
6. PROVIDE MECHANICAL RESTRAINT AT PIPE FITTINGS AND JOINTS AS SPECIFIED
7. SEE NOTE 1 DWG 101
8. SEE NOTE 4 DWG 101
9. PROVIDE 8" MC IF CONNECTING DI TO RCCP.

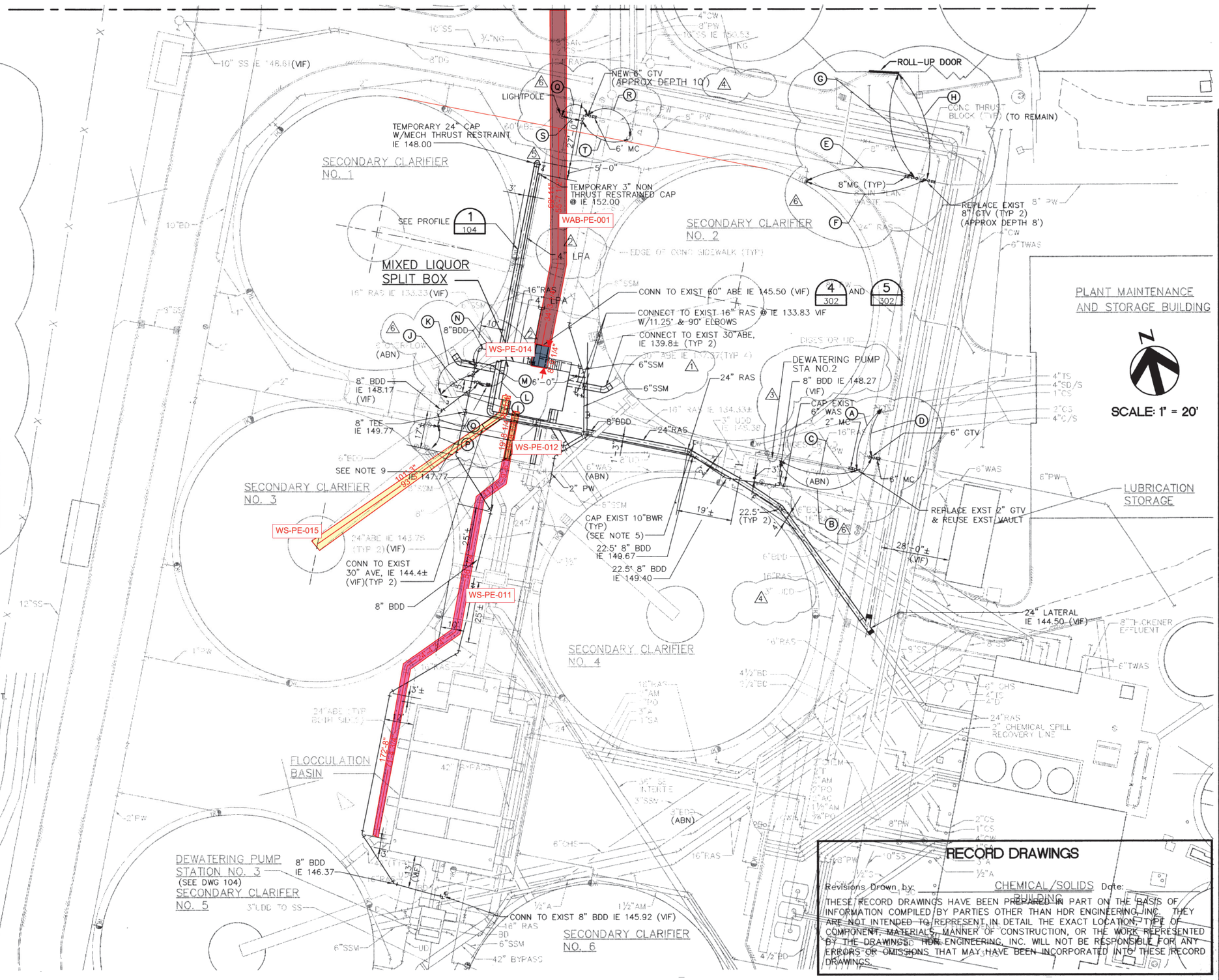

HDR Engineering, Inc.

UNIFIED SEWERAGE AGENCY OF WASHINGTON COUNTY

ROCK CREEK SECONDARY TREATMENT IMPROVEMENTS

YARD PIPING PLAN (VALVES) (6)

Project Manager	B. WILLEY
Designed	M. LASECKI
Drawn	T. SMITH
Checked	G. JONES
Project Number	00039–305–102
Date	FEBRUARY 22, 1995

THIS LINE IS ONE INCH WHEN DRAWING IS FULL SIZE. IF NOT ONE INCH, SCALE ACCORDINGLY.

No	By	Description	Date
1	GWJ	ADDENDUM NO. 1	3–6–95
2	DMP	RFI #010	5–21–96
3	DMP	CPR #07	5–21–96
4	DMP	CPR #010	5–21–96
5	DMP	CPR #018	5–21–96
6	BDR	RECORD DRAWING	8–30–96

THE CONTRACT DOCUMENT DRAWINGS ARE THE CONFORMING SET DOCUMENTS DATED FEBRUARY, 1996, WHICH DEFINE THE ENGINEER'S ORIGINAL AND SUBSEQUENTLY AMENDED SCOPE, EXTENT, AND CHARACTER OF THE WORK. THE CONFORMING SET CONTRACT DOCUMENT DRAWING FOR THIS RECORD DRAWING WAS SEALED AND SIGNED BY BRUCE WILLEY, HDR ENGINEERING, INC. OREGON PE NO. 13391.

Sheet Number (6) 103V

RECORD DRAWINGS

Revisions Drawn by: CHEMICAL/SOLIDS PUMPING Date:

THESE RECORD DRAWINGS HAVE BEEN PREPARED IN PART ON THE BASIS OF INFORMATION COMPILED BY PARTIES OTHER THAN HDR ENGINEERING, INC. THEY ARE NOT INTENDED TO REPRESENT IN DETAIL THE EXACT LOCATION, TYPE OF COMPONENT, MATERIALS, MANNER OF CONSTRUCTION, OR THE WORK REPRESENTED BY THE DRAWINGS. HDR ENGINEERING, INC. WILL NOT BE RESPONSIBLE FOR ANY ERRORS OR OMISSIONS THAT MAY HAVE BEEN INCORPORATED INTO THESE RECORD DRAWINGS.

9-10-96
RCS-103V.DWG

CadNet
Date 03-09-95
Drafter T. SMITH
Drawing Name RCS-301D.DWG
Engineer M. LASECKI
Job Number 00039-305-102

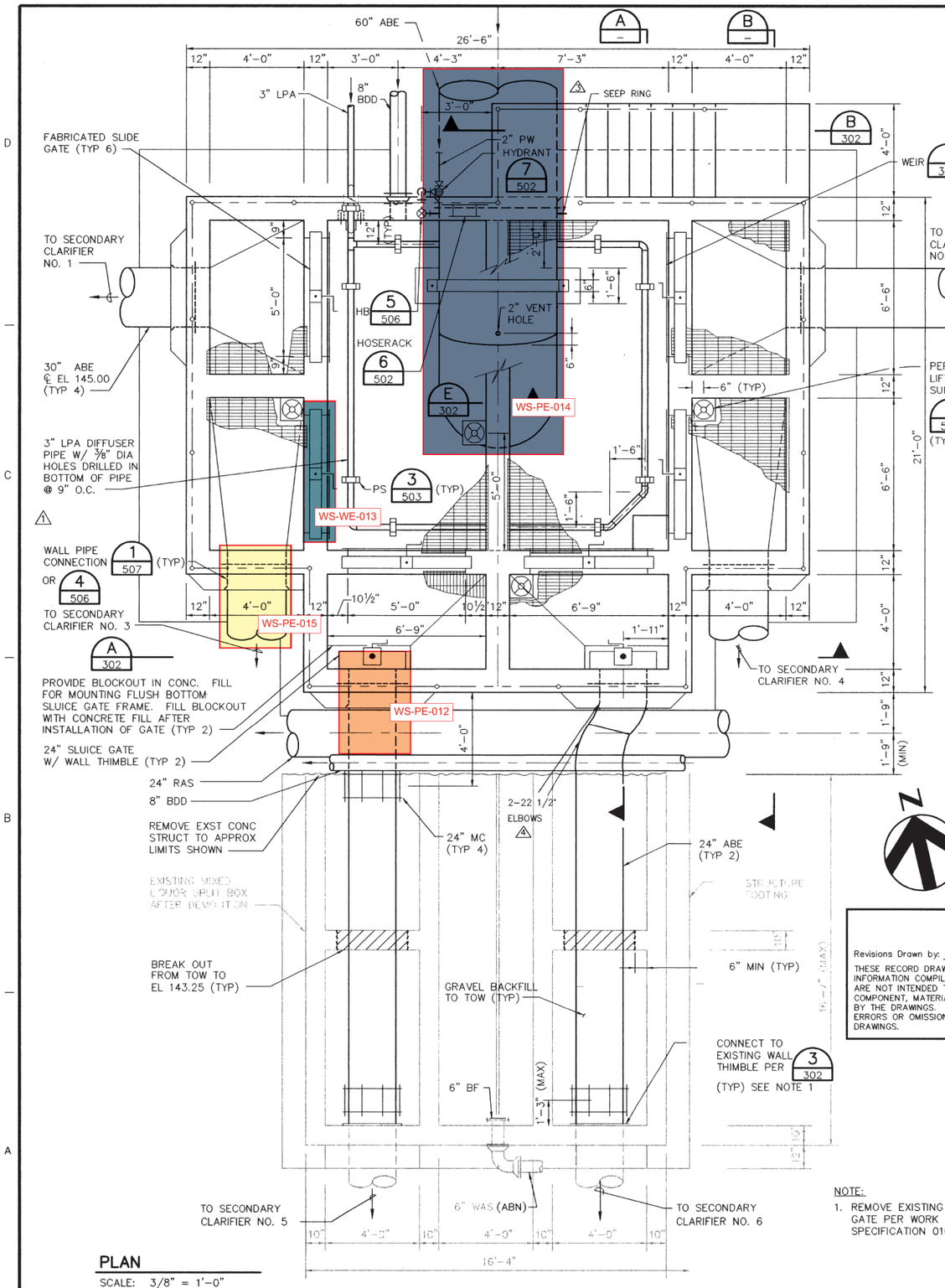

PLAN
SCALE: 3/8" = 1'-0"

SECTION A
SCALE: 3/8" = 1'-0"

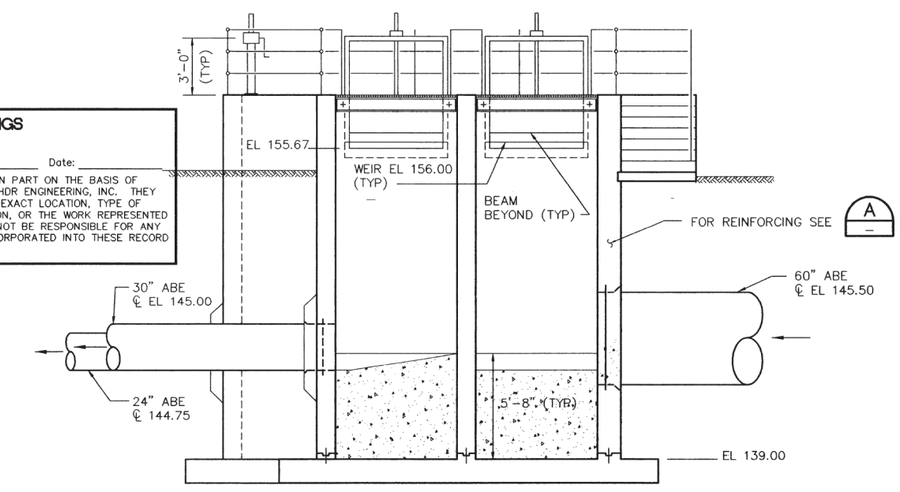

SECTION B
SCALE: 1/4" = 1'-0"

RECORD DRAWINGS

Revisions Drawn by: _____ Date: _____

THESE RECORD DRAWINGS HAVE BEEN PREPARED IN PART ON THE BASIS OF INFORMATION COMPILED BY PARTIES OTHER THAN HDR ENGINEERING, INC. THEY ARE NOT INTENDED TO REPRESENT IN DETAIL THE EXACT LOCATION, TYPE OF COMPONENT, MATERIALS, MANNER OF CONSTRUCTION, OR THE WORK REPRESENTED BY THE DRAWINGS. HDR ENGINEERING, INC. WILL NOT BE RESPONSIBLE FOR ANY ERRORS OR OMISSIONS THAT MAY HAVE BEEN INCORPORATED INTO THESE RECORD DRAWINGS.

NOTE:
1. REMOVE EXISTING 24" SLUICE GATE PER WORK SEQUENCE, SPECIFICATION 01010.

HDR Engineering, Inc.

UNIFIED SEWERAGE AGENCY OF WASHINGTON COUNTY

ROCK CREEK SECONDARY TREATMENT IMPROVEMENTS

MIXED LIQUOR SPLIT BOX - PLAN AND SECTIONS

Project Manager	B. WILLEY
Designed	M.LASECKI / N.CABLE
Drawn	J. BACHMEIER
Checked	G. JONES
Project Number	00039-305-102
Date	FEBRUARY 22, 1995

THIS LINE IS ONE INCH WHEN DRAWING IS FULL SIZE. IF NOT ONE INCH, SCALE ACCORDINGLY.

No	By	Description	Date
1	GWJ	ADDENDUM NO. 2	3-10-95
2	DMP	RFI #5	12-17-95
3	DMP	RFI #2	12-17-95
4	DMP	RFI #20	12-17-95

THE CONTRACT DOCUMENT DRAWINGS ARE THE CONFORMING SET DOCUMENTS DATED FEBRUARY, 1996, WHICH DEFINE THE ENGINEER'S ORIGINAL AND SUBSEQUENTLY AMENDED SCOPE, EXTENT, AND CHARACTER OF THE WORK. THE CONFORMING SET CONTRACT DOCUMENT DRAWING FOR THIS RECORD DRAWING WAS SEALED AND SIGNED BY BRUCE WILLEY, HDR ENGINEERING, INC. OREGON PE NO. 13391.

Sheet Number
301

9-10-96
RCS-301R.DWG

WAB WEST AERATION BASINS

CONSTRUCTION DRAWING

(INCLUDED FOR REFERENCE SEE PIPING COMPOSITE DRAWINGS)

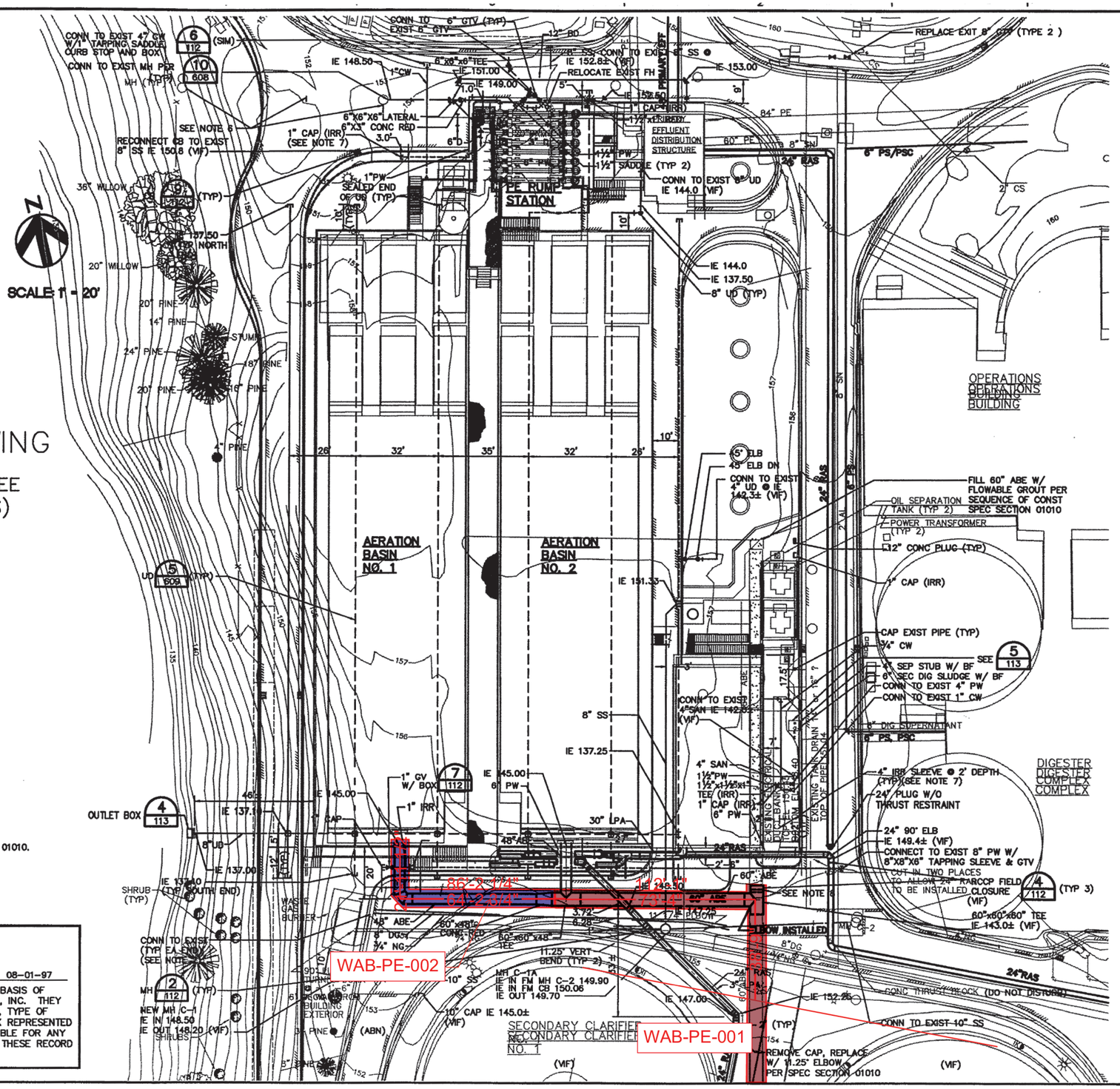

NOTES

1. PIPE DIMENSIONS ARE SHOWN FROM ℄ OF PIPE TO OUTSIDE FACE OF STRUCTURE.
2. REUSE EXISTING LINED DUCTILE IRON PIPING. REPLACE ALL GASKETS AND RECONNECT ALL BONDING CONVECTIONS. REUSE EXISTING PILOT GAS PIPING AND RETAPE ALL BARE OR DAMAGED AREAS.
3. ALL ELBOWS ARE 45° OR 90° UNLESS SHOWN OTHERWISE.
4. SEE NOTES 2, 3, AND 4 SHT 101.
5. SLOPE PIPING UNIFORMLY BETWEEN IE'S SHOWN.
6. FILL PIPE ENTRY CHANNEL INSIDE EXIST MH & PLUG REMAINING PIPE STUB TO SOUTH W/ 12" OF CONC.
7. MARK ONE END IRR SLEEVES AND IRR PIPING CAPS W/ 2"x4"x6' CEDAR POST (TYP).
8. PROVIDE TEMPORARY BULKHEAD DAM FOR INSTALLATION OF LEAN GROUT FILL IN 60" ABE PER SPECIFICATIONS SECTION 01010.
9. CAP THE 2" DRAIN LINE TO THE SANITARY SEWER WEST OF THE TRANSFER 4' BELOW GRADE OUTSIDE THE BUILDING LINE OF A/B #2.

RECORD DRAWINGS

Revisions Drawn by: S. KUHNS Date: 08-01-97

THESE RECORD DRAWINGS HAVE BEEN PREPARED IN PART ON THE BASIS OF INFORMATION COMPILED BY PARTIES OTHER THAN HDR ENGINEERING, INC. THEY ARE NOT INTENDED TO REPRESENT IN DETAIL THE EXACT LOCATION, TYPE OF COMPONENT, MATERIALS, MANNER OF CONSTRUCTION, OR THE WORK REPRESENTED BY THE DRAWINGS. HDR ENGINEERING, INC. WILL NOT BE RESPONSIBLE FOR ANY ERRORS OR OMISSIONS THAT MAY HAVE BEEN INCORPORATED INTO THESE RECORD DRAWINGS.

HDR Engineering, Inc.

UNIFIED SEWERAGE AGENCY OF WASHINGTON COUNTY

ROCK CREEK NITRIFICATION UPGRADE

YARD PIPING PLAN

Project Manager	B. WILLEY
Designed	G. JONES
Drawn	T. SMITH
Checked	L. CRONISTER
Project Number	00039-305-102
Date	AUG 01, 1997

THIS LINE IS ONE INCH WHEN DRAWING IS FULL SIZE. IF NOT ONE INCH, SCALE ACCORDINGLY.

No	By	Description	Date
3	JES	C.O. #3	4-22-96
4	JES	C.O. #7 - CPR 103	7-11-97
5	JES	C.O. #6 - CPR 71	7-14-97
6	JES	C.O. #5 - CPR 56/T022 & 59	7-14-97

EXPIRES 6/30/98

Sheet Number 111

08-01-97

RCN-111R.DWG

RECORD DRAWINGS

Revisions Drawn by: S. KUHNS Date: 08-01-97

THESE RECORD DRAWINGS HAVE BEEN PREPARED IN PART ON THE BASIS OF INFORMATION COMPILED BY PARTIES OTHER THAN HDR ENGINEERING, INC. THEY ARE NOT INTENDED TO REPRESENT IN DETAIL THE EXACT LOCATION, TYPE OF COMPONENT, MATERIALS, MANNER OF CONSTRUCTION, OR THE WORK REPRESENTED BY THE DRAWINGS. HDR ENGINEERING, INC. WILL NOT BE RESPONSIBLE FOR ANY ERRORS OR OMISSIONS THAT MAY HAVE BEEN INCORPORATED INTO THESE RECORD DRAWINGS.

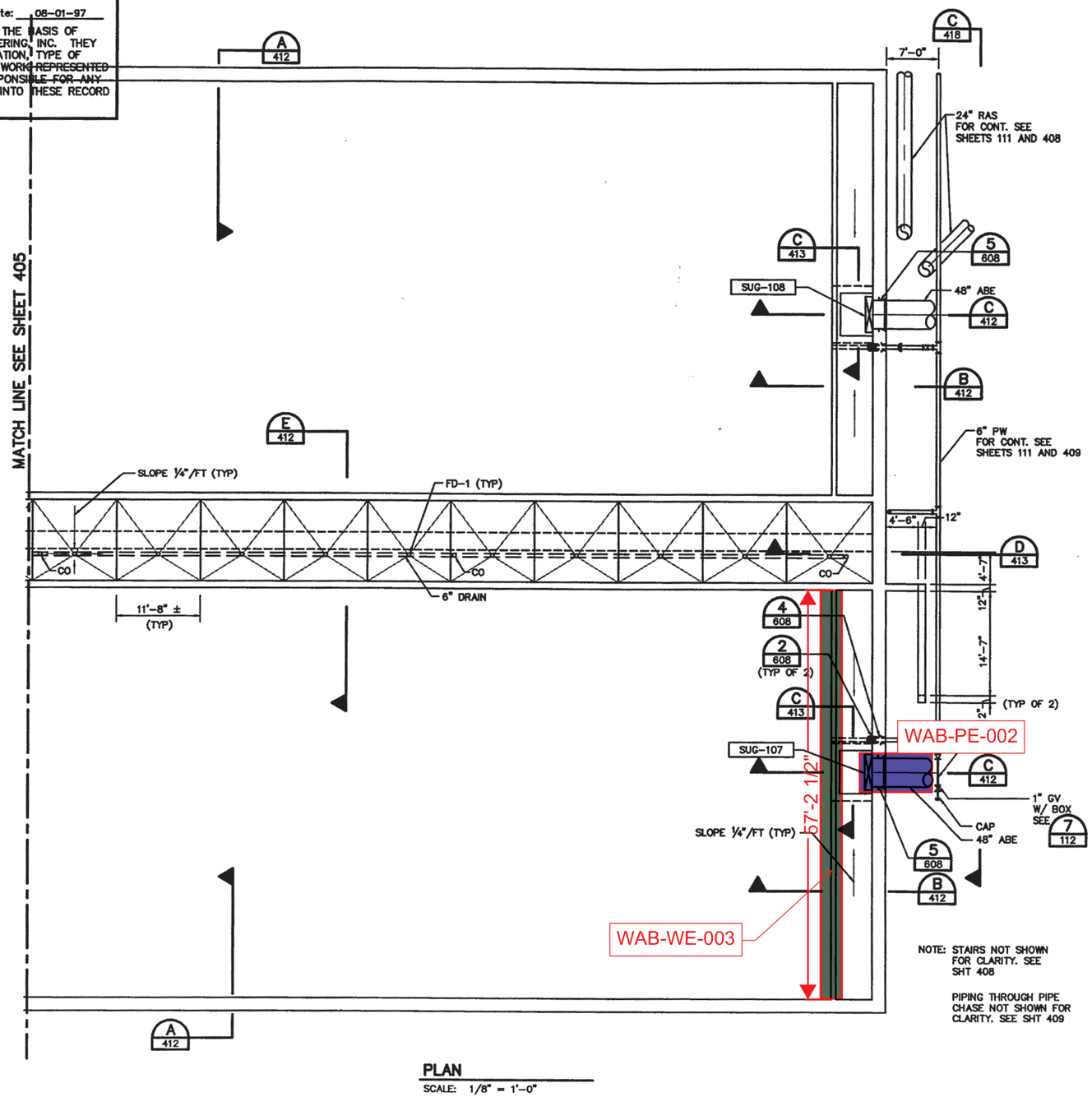

PLAN

SCALE: 1/8" = 1'-0"

HDR Engineering, Inc.

UNIFIED SEWERAGE AGENCY OF WASHINGTON COUNTY

ROCK CREEK NITRIFICATION UPGRADE

AERATION BASINS - SOUTH SECTIONAL PLAN

Project Manager	B. WILLEY
Designed	C. CAPRARA
Drawn	G. SMITH
Checked	D. GRABER
Project Number	00039-305-102
Date	MAY 25, 1995

THIS LINE IS ONE INCH WHEN DRAWING IS FULL SIZE. IF NOT ONE INCH, SCALE ACCORDINGLY.

No	By	Description	Date
1	JES	6" VALVE CO #31	5/30/96

Sheet Number 406

07-11-95

RCN-406R.DWG

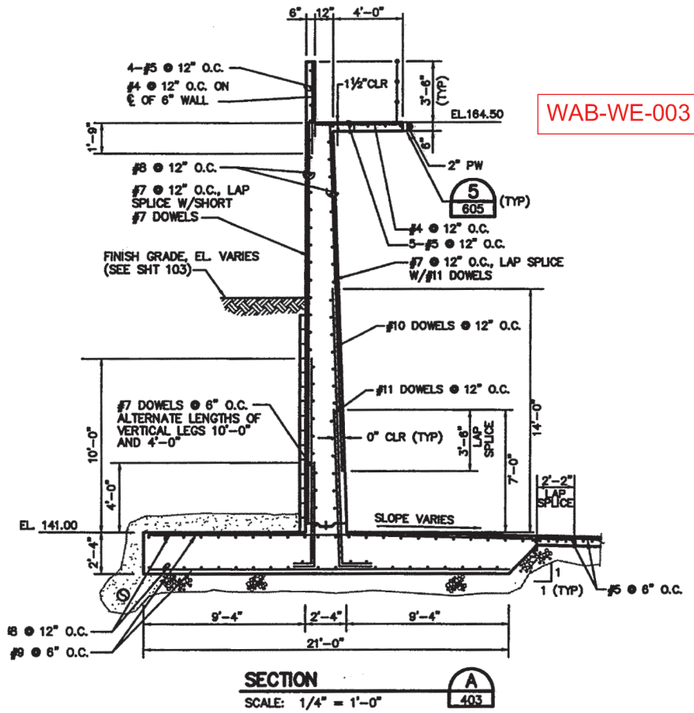

SECTION A 403
SCALE: 1/4" = 1'-0"

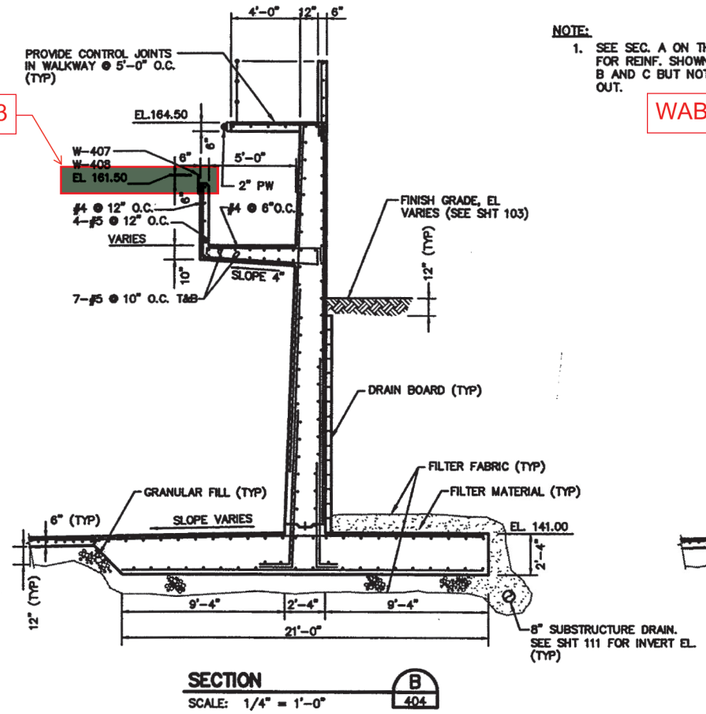

SECTION B 404
SCALE: 1/4" = 1'-0"

NOTE:
1. SEE SEC. A ON THIS SHEET FOR REINF. SHOWN IN SEC. B AND C BUT NOT CALLED OUT.

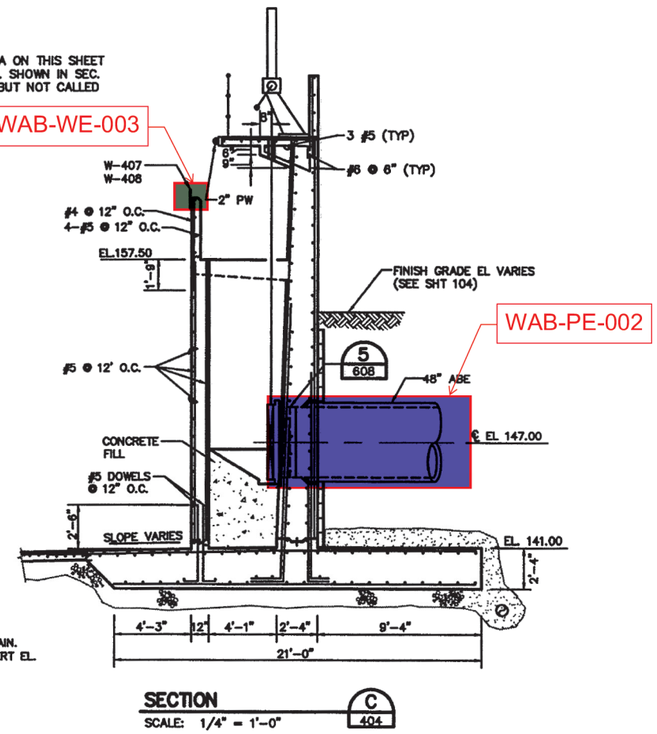

SECTION C 404
SCALE: 1/4" = 1'-0"

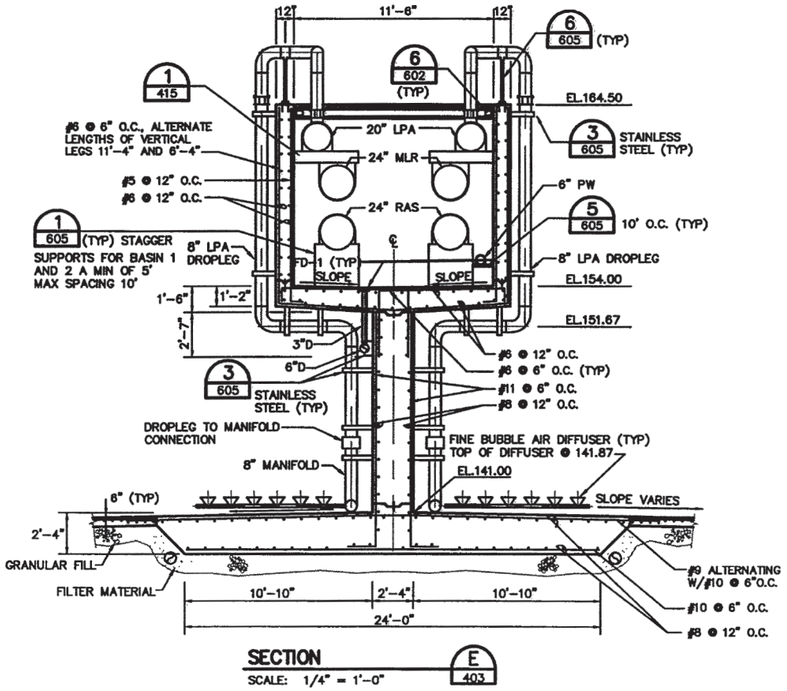

SECTION E 403
SCALE: 1/4" = 1'-0"

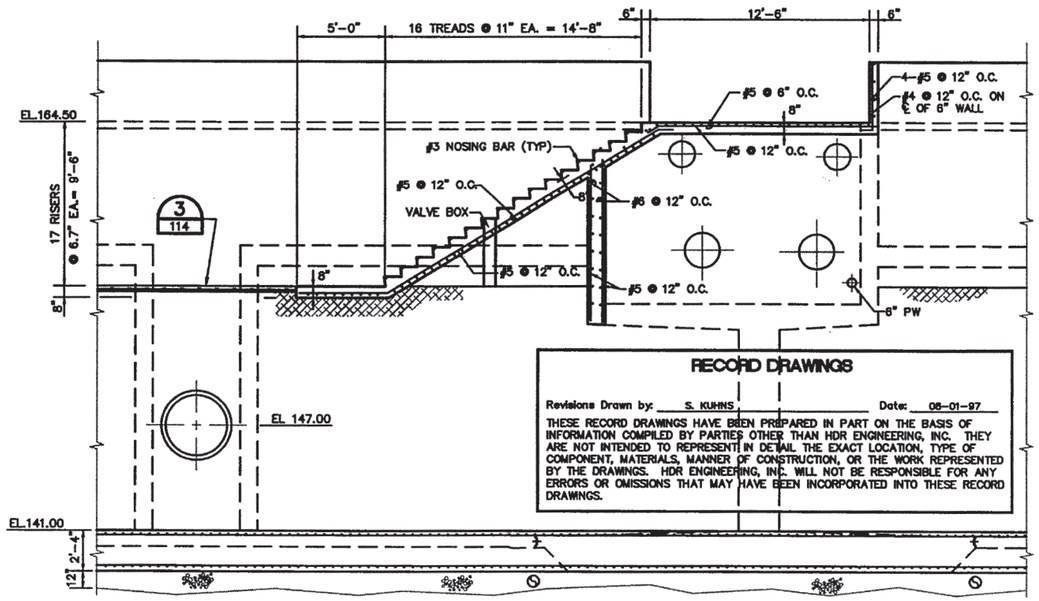

SECTION F 408
SCALE: 1/4" = 1'-0"

RECORD DRAWINGS

Revisions Drawn by: S. KUHNS Date: 08-01-97

THESE RECORD DRAWINGS HAVE BEEN PREPARED IN PART ON THE BASIS OF INFORMATION COMPILED BY PARTIES OTHER THAN HDR ENGINEERING, INC. THEY ARE NOT INTENDED TO REPRESENT IN DETAIL THE EXACT LOCATION, TYPE OF COMPONENT, MATERIALS, MANNER OF CONSTRUCTION, OR THE WORK REPRESENTED BY THE DRAWINGS. HDR ENGINEERING, INC. WILL NOT BE RESPONSIBLE FOR ANY ERRORS OR OMISSIONS THAT MAY HAVE BEEN INCORPORATED INTO THESE RECORD DRAWINGS.

HDR Engineering, Inc.

UNIFIED SEWERAGE AGENCY OF WASHINGTON COUNTY

ROCK CREEK NITRIFICATION UPGRADE

AERATION BASINS - SECTIONS

Project Manager	B. WILLEY
Designed	C.CAPRARA
Drawn	G. SMITH
Checked	L. CRONISTER
Project Number	00039-305-102
Date	MAY 25, 1995

THIS LINE IS ONE INCH WHEN DRAWING IS FULL SIZE. IF NOT ONE INCH, SCALE ACCORDINGLY.

No	By	Description	Date
A	JS	DUCTBANK BLOCKOUT CO #17	7/14/97
A	JS	CO # 5 CPR 58	7/14/97

Sheet Number 412

06-19-95

RCN-412R.DWG

RECORD DRAWINGS

Revisions Drawn by: S. KUHNS Date: 08-01-97

THESE RECORD DRAWINGS HAVE BEEN PREPARED IN PART ON THE BASIS OF INFORMATION COMPILED BY PARTIES OTHER THAN HDR ENGINEERING, INC. THEY ARE NOT INTENDED TO REPRESENT IN DETAIL THE EXACT LOCATION, TYPE OF COMPONENT, MATERIALS, MANNER OF CONSTRUCTION, OR THE WORK REPRESENTED BY THE DRAWINGS. HDR ENGINEERING, INC. WILL NOT BE RESPONSIBLE FOR ANY ERRORS OR OMISSIONS THAT MAY HAVE BEEN INCORPORATED INTO THESE RECORD DRAWINGS.

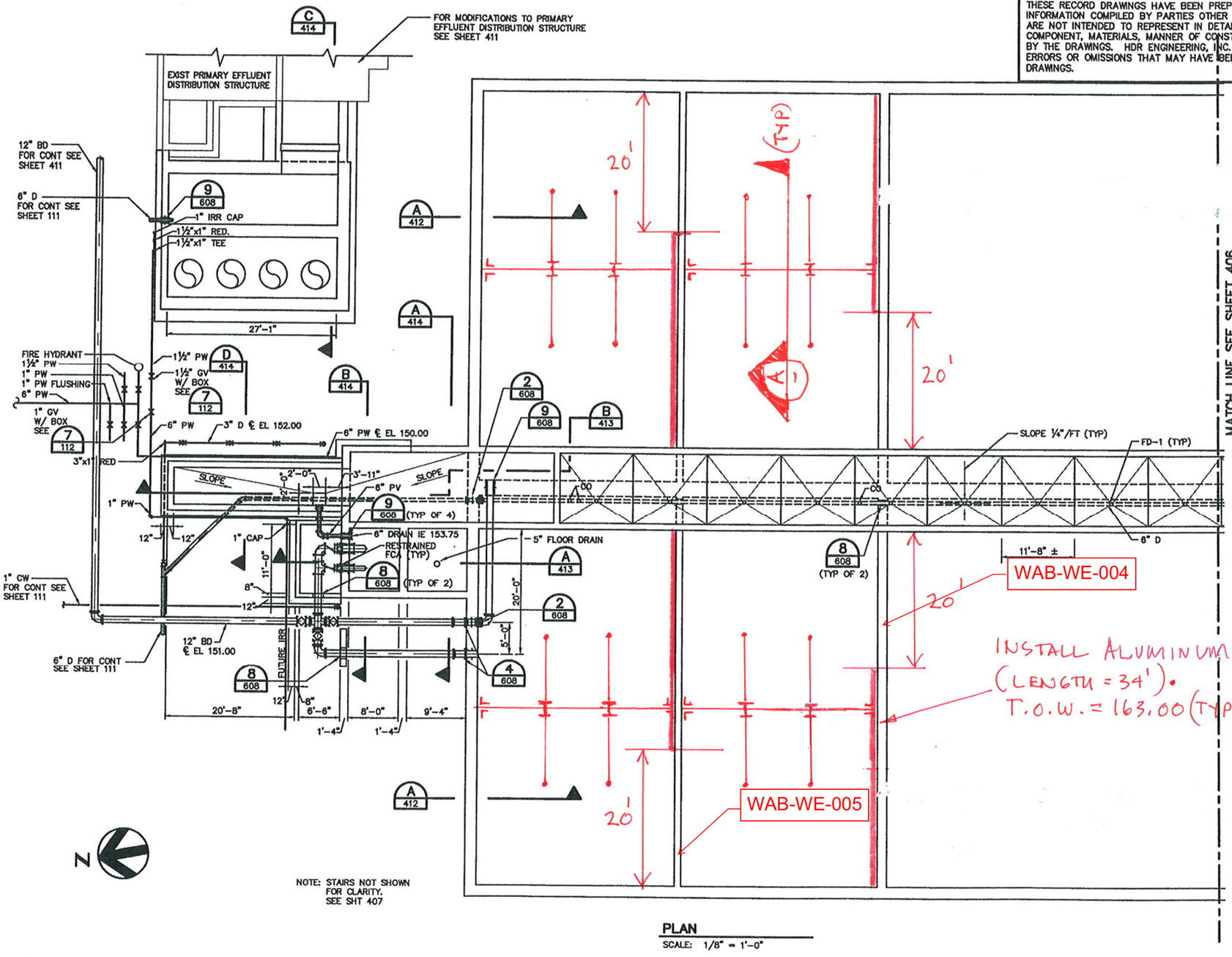

PLAN
SCALE: 1/8" = 1'-0"

NOTES
1. FLOOR DRAIN AT LIME SILO SLAB TO BE SMITH FLOOR DRAIN MODEL #2135 WITH HINGED GRATE OR EQUAL

AERATION BASINS 1 AND 2

HDR Engineering, Inc.

UNIFIED SEWERAGE AGENCY OF WASHINGTON COUNTY

ROCK CREEK NITRIFICATION UPGRADE

AERATION BASINS - NORTH SECTIONAL PLAN

Project Manager	B. WILLEY
Designed	C. CAPRARA
Drawn	P. BAKER
Checked	L. CRONISTER
Project Number	00039-305-102
Date	AUG 01, 1997

THIS LINE IS ONE INCH WHEN DRAWING IS FULL SIZE. IF NOT ONE INCH, SCALE ACCORDINGLY.

No	By	Description	Date
1	JES	PUMP STA ADS DUE TO SHORING	4/5/96
2	JES	COS CPR #60	7/14/97

Sheet Number 405

08-01-97

RCN-405R.DWG

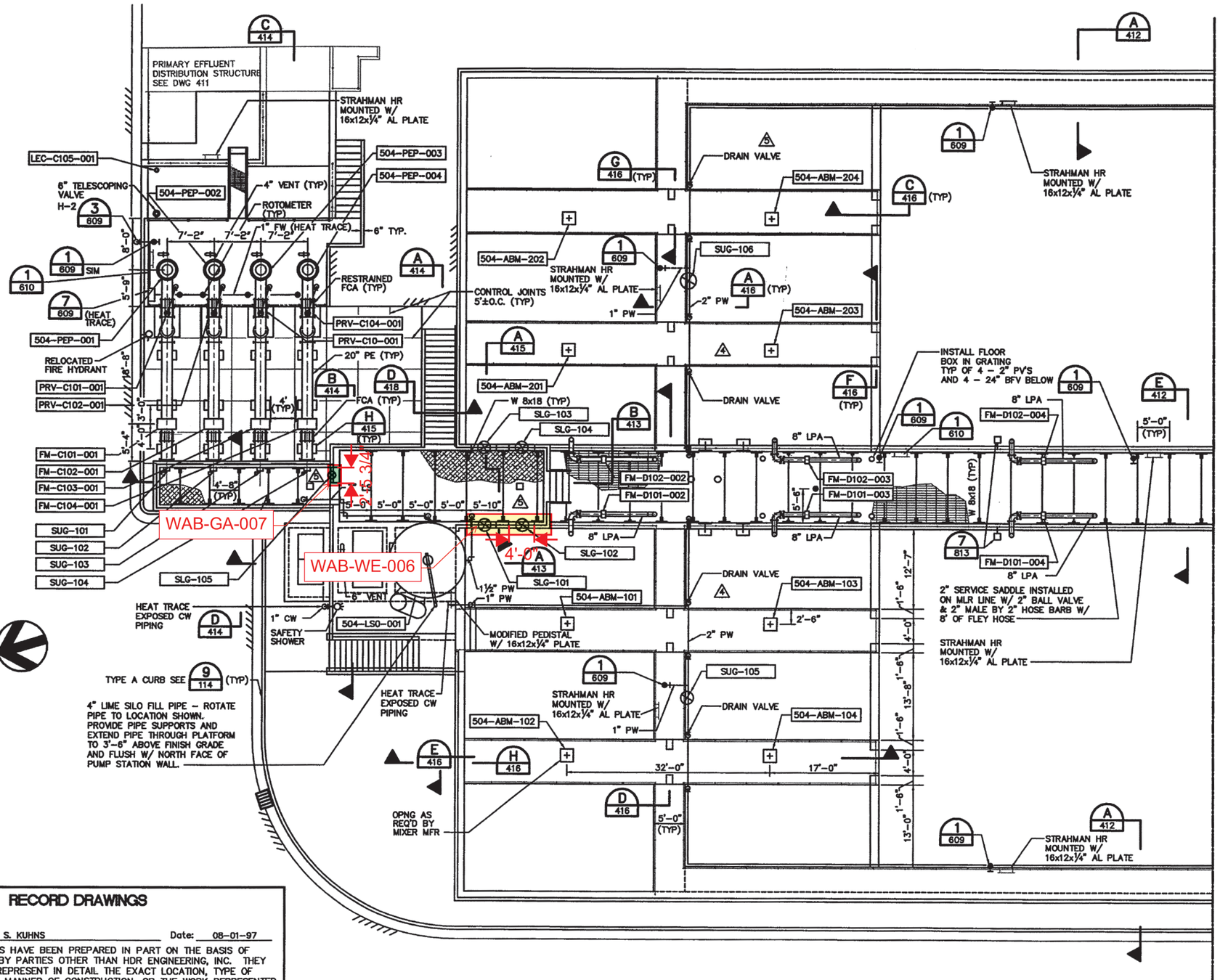

RECORD DRAWINGS

Revisions Drawn by: S. KUHNS Date: 08-01-97

THESE RECORD DRAWINGS HAVE BEEN PREPARED IN PART ON THE BASIS OF INFORMATION COMPILED BY PARTIES OTHER THAN HDR ENGINEERING, INC. THEY ARE NOT INTENDED TO REPRESENT IN DETAIL THE EXACT LOCATION, TYPE OF COMPONENT, MATERIALS, MANNER OF CONSTRUCTION, OR THE WORK REPRESENTED BY THE DRAWINGS. HDR ENGINEERING, INC. WILL NOT BE RESPONSIBLE FOR ANY ERRORS OR OMISSIONS THAT MAY HAVE BEEN INCORPORATED INTO THESE RECORD DRAWINGS.

PLAN

SCALE: 1/8" = 1'-0"

HDR Engineering, Inc.

UNIFIED SEWERAGE AGENCY OF WASHINGTON COUNTY

ROCK CREEK NITRIFICATION UPGRADE

AERATION BASIN – UPPER PLAN NORTH

Project Manager	B. WILLEY
Designed	C. CAPRARA
Drawn	J. BACHMEIER
Checked	L. CRONISTER
Project Number	00039-305-102
Date	MAY 25, 1995

THIS LINE IS ONE INCH WHEN DRAWING IS FULL SIZE. IF NOT ONE INCH, SCALE ACCORDINGLY.

No	By	Description	Date
1	JES	PUMP STA ADS DUE TO SHORING	4/5/96
2	JES	CO #7 CPR – 060 & 107	7/11/97
3	JES	CO #6 CPR – 67, 86 & 71	7/14/97
4		CO #8 CPR – 93	
5		CO #8 CPR – 110R	

Sheet Number 407

06-16-95

RCN-407R.DWG

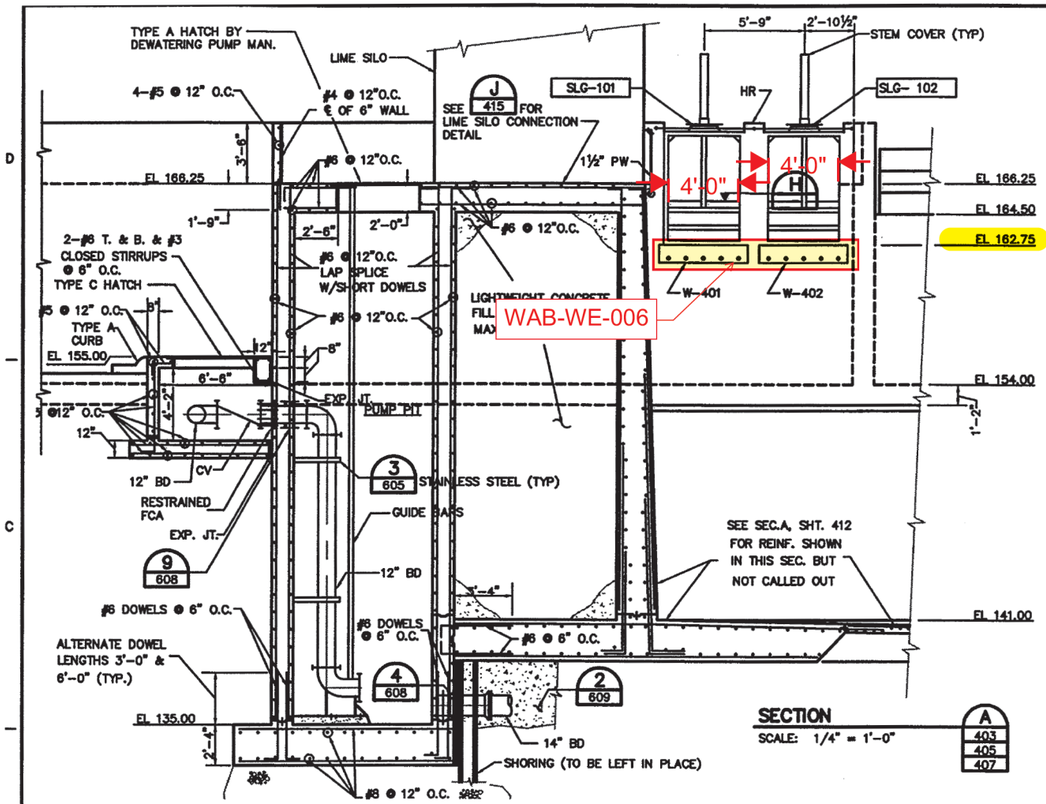

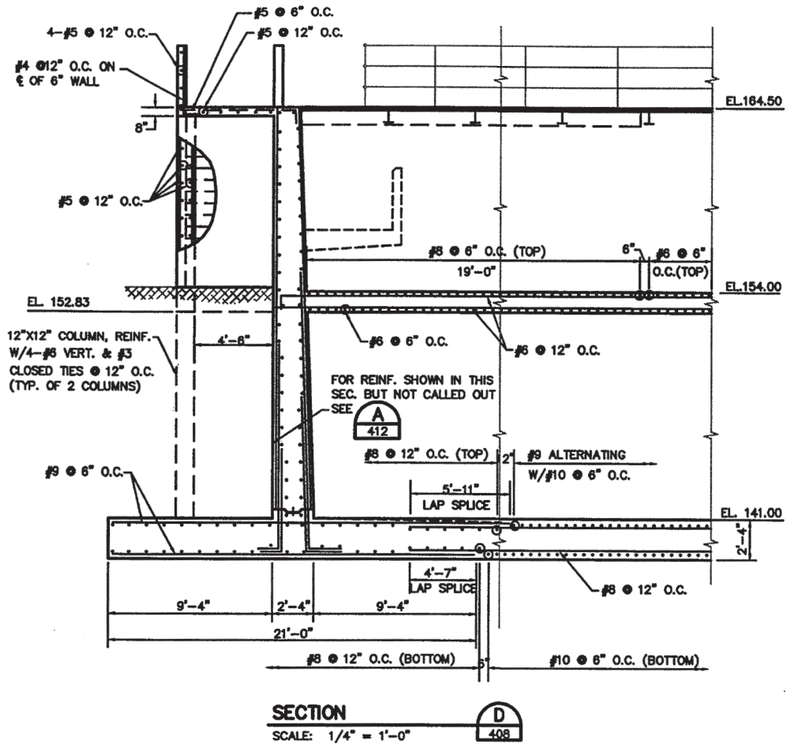

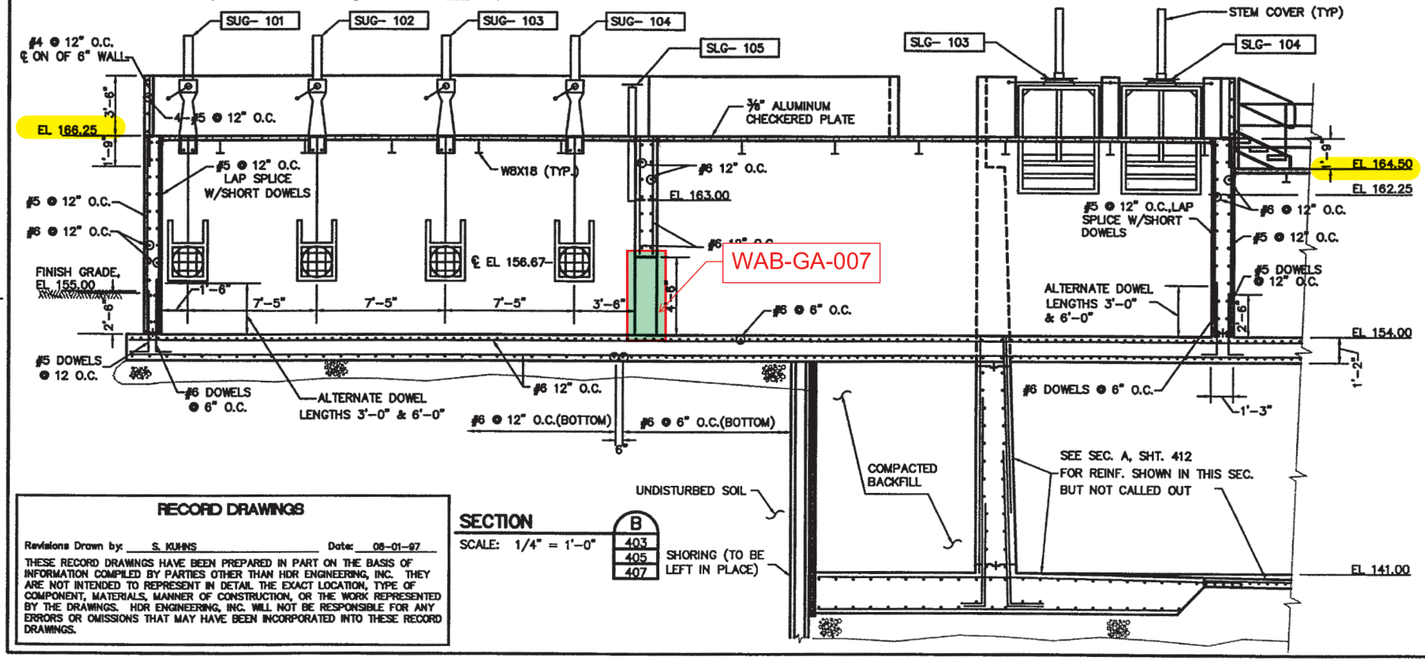

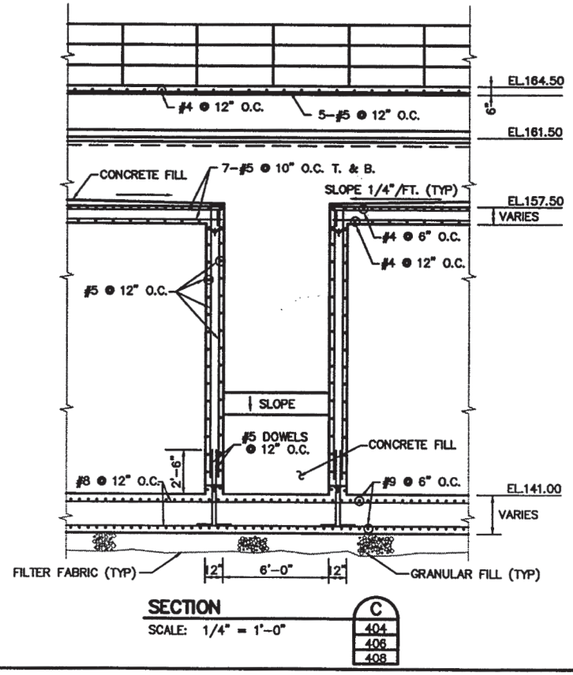

RECORD DRAWINGS

Revisions Drawn by: S. KUHNS Date: 08-01-97

THESE RECORD DRAWINGS HAVE BEEN PREPARED IN PART ON THE BASIS OF INFORMATION COMPILED BY PARTIES OTHER THAN HDR ENGINEERING, INC. THEY ARE NOT INTENDED TO REPRESENT IN DETAIL THE EXACT LOCATION, TYPE OF COMPONENT, MATERIALS, MANNER OF CONSTRUCTION, OR THE WORK REPRESENTED BY THE DRAWINGS. HDR ENGINEERING, INC. WILL NOT BE RESPONSIBLE FOR ANY ERRORS OR OMISSIONS THAT MAY HAVE BEEN INCORPORATED INTO THESE RECORD DRAWINGS.

HDR Engineering, Inc.

UNIFIED SEWERAGE AGENCY OF WASHINGTON COUNTY

ROCK CREEK NITRIFICATION UPGRADE

AERATION BASIN - SECTIONS

Project Manager	B. WILLEY
Designed	C. CAPRARA
Drawn	CADNET
Checked	L. CRONISTER
Project Number	00039-305-102
Date	MAY 25, 1995

THIS LINE IS ONE INCH WHEN DRAWING IS FULL SIZE. IF NOT ONE INCH, SCALE ACCORDINGLY.

No	By	Description	Date
1	JES	CO #7 CPR - 097	7/11/97

Sheet Number 413

05-26-95

RCN-413R.DWG

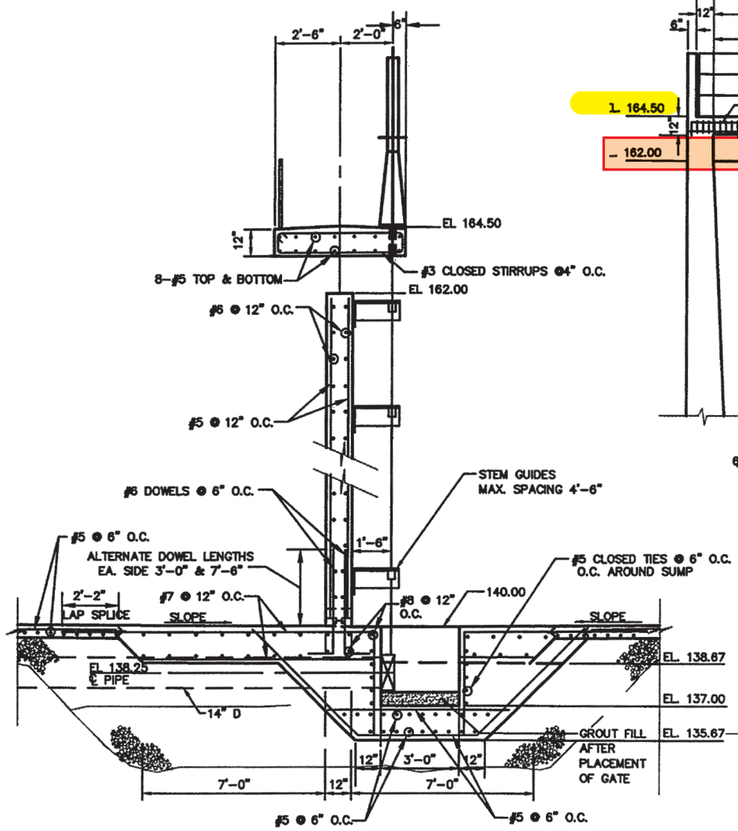

SECTION A
SCALE: 3/8" = 1'-0"
403
407

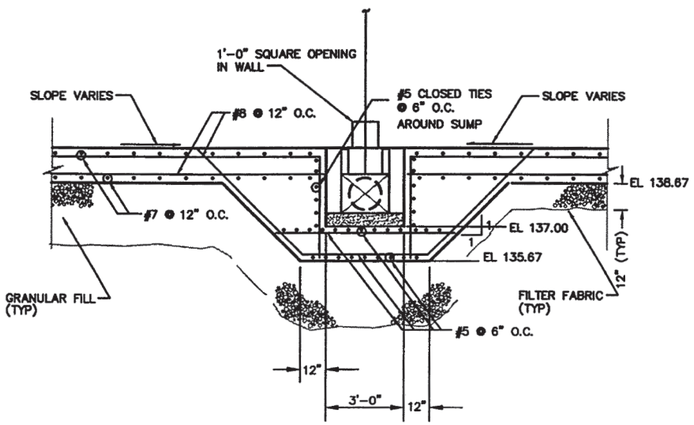

SECTION B
SCALE: 3/8" = 1'-0"
403

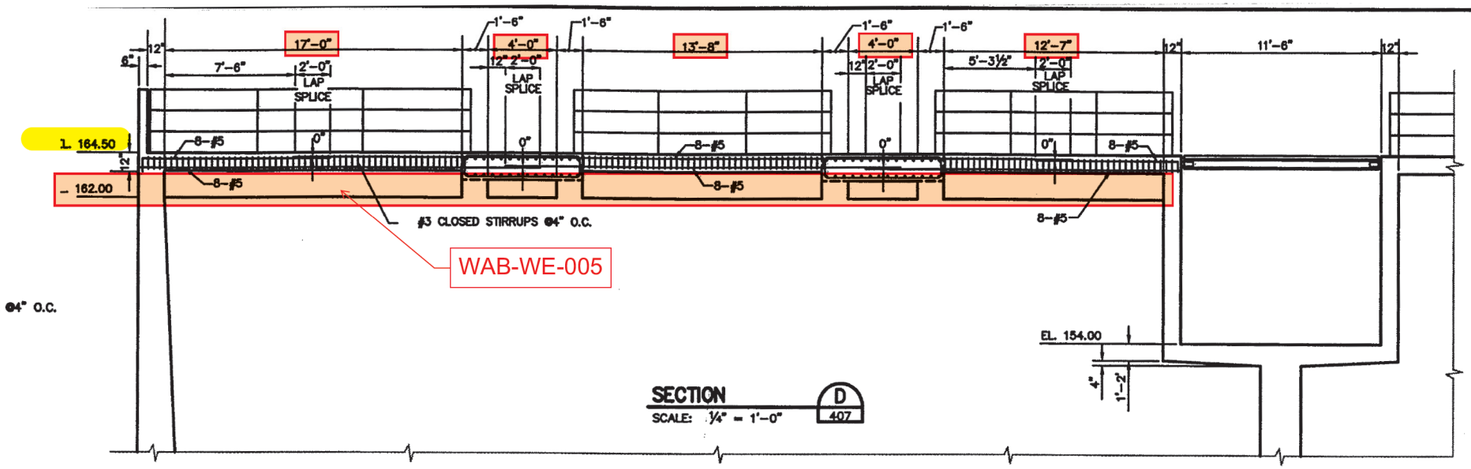

SECTION D
SCALE: 1/4" = 1'-0"
407

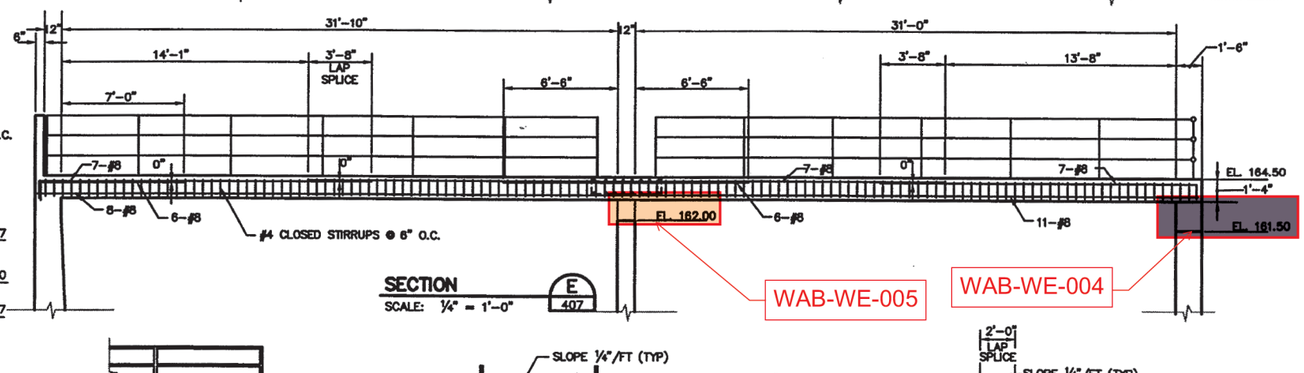

SECTION E
SCALE: 1/4" = 1'-0"
407

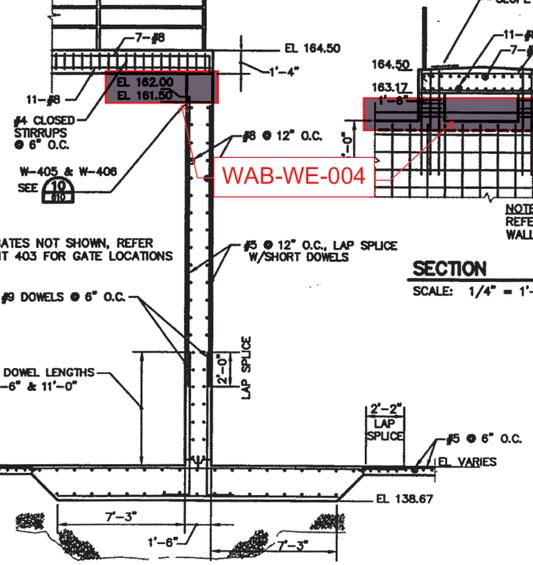

SECTION C
SCALE: 1/4" = 1'-0"
403
407

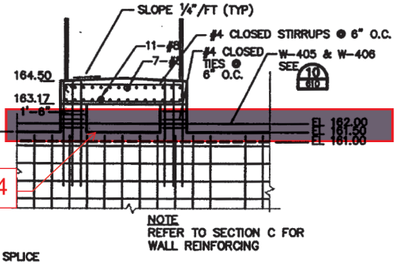

SECTION F
SCALE: 1/4" = 1'-0"
407

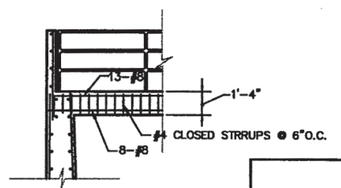

SECTION H
SCALE: 1/4" = 1'-0"
407

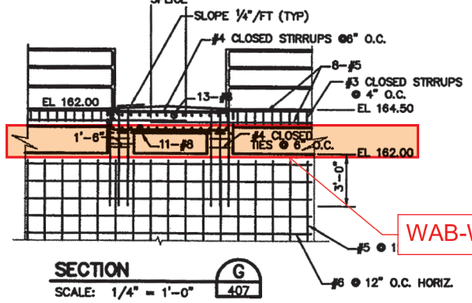

SECTION G
SCALE: 1/4" = 1'-0"
407

RECORD DRAWINGS

Revisions Drawn by: S. KUHNS Date: 08-01-97

THESE RECORD DRAWINGS HAVE BEEN PREPARED IN PART ON THE BASIS OF INFORMATION COMPILED BY PARTIES OTHER THAN HDR ENGINEERING, INC. THEY ARE NOT INTENDED TO REPRESENT IN DETAIL THE EXACT LOCATION, TYPE OF COMPONENT, MATERIALS, MANNER OF CONSTRUCTION, OR THE WORK REPRESENTED BY THE DRAWINGS. HDR ENGINEERING, INC. WILL NOT BE RESPONSIBLE FOR ANY ERRORS OR OMISSIONS THAT MAY HAVE BEEN INCORPORATED INTO THESE RECORD DRAWINGS.

HDR
HDR Engineering, Inc.

UNIFIED SEWERAGE AGENCY
OF WASHINGTON COUNTY

ROCK CREEK NITRIFICATION UPGRADE

AERATION BASIN - SECTIONS

Project Manager	B. WILLEY
Designed	C. CAPRARA
Drawn	T. SMITH
Checked	L. CRONISTER
Project Number	00039-305-102
Date	MAY 25, 1995

THIS LINE IS ONE INCH WHEN DRAWING IS FULL SIZE. IF NOT ONE INCH, SCALE ACCORDINGLY.

No	By	Date

Sheet Number
416

07-11-95
RCN-416R.DWG

PC PRIMARY CLARIFIERS

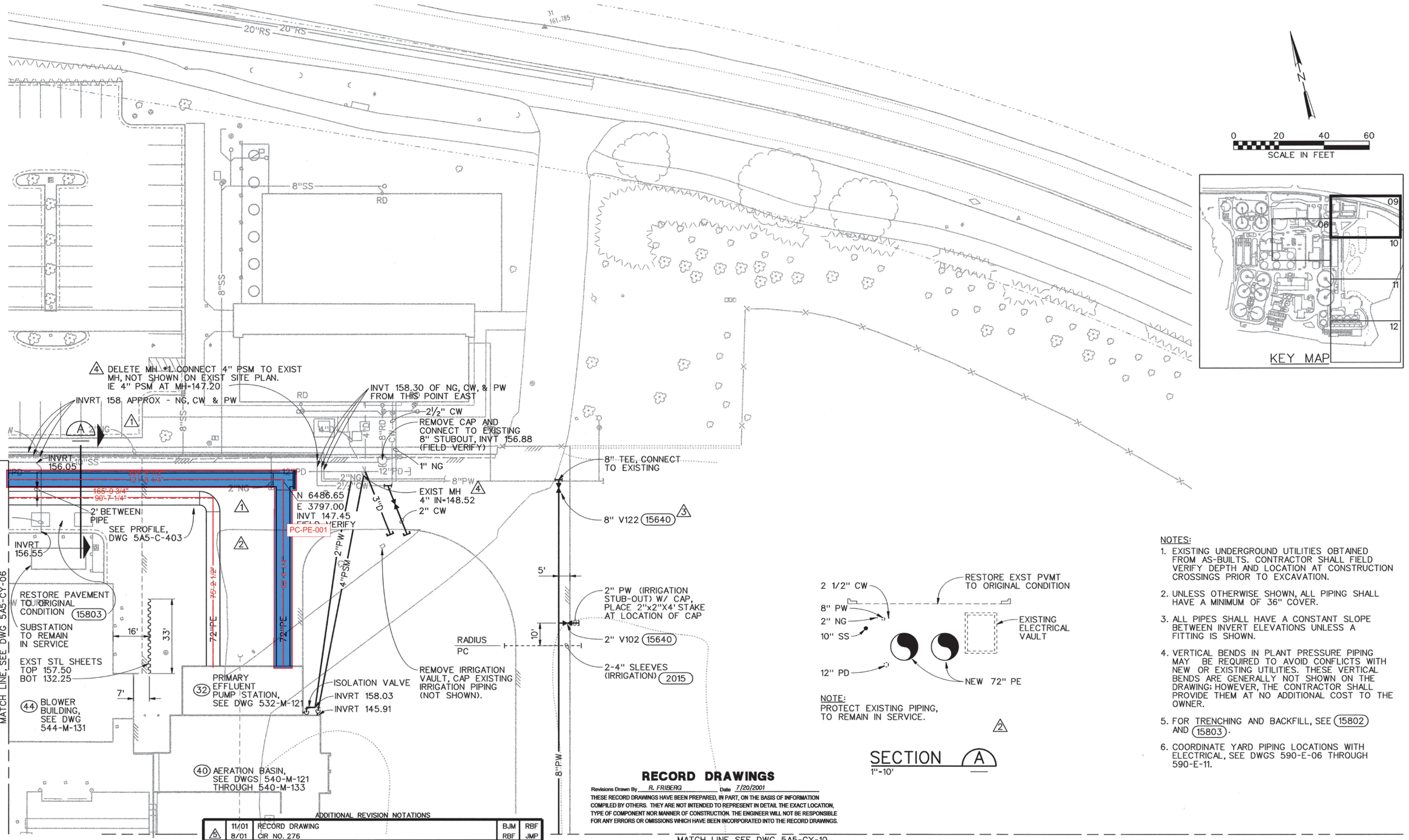

NOTE:
PROTECT EXISTING PIPING, TO REMAIN IN SERVICE.

2

SECTION A
1"=10'

NOTES:

1. EXISTING UNDERGROUND UTILITIES OBTAINED FROM AS-BUILTS. CONTRACTOR SHALL FIELD VERIFY DEPTH AND LOCATION AT CONSTRUCTION CROSSINGS PRIOR TO EXCAVATION.
2. UNLESS OTHERWISE SHOWN, ALL PIPING SHALL HAVE A MINIMUM OF 36" COVER.
3. ALL PIPES SHALL HAVE A CONSTANT SLOPE BETWEEN INVERT ELEVATIONS UNLESS A FITTING IS SHOWN.
4. VERTICAL BENDS IN PLANT PRESSURE PIPING MAY BE REQUIRED TO AVOID CONFLICTS WITH NEW OR EXISTING UTILITIES. THESE VERTICAL BENDS ARE GENERALLY NOT SHOWN ON THE DRAWING; HOWEVER, THE CONTRACTOR SHALL PROVIDE THEM AT NO ADDITIONAL COST TO THE OWNER.
5. FOR TRENCHING AND BACKFILL, SEE 15802 AND 15803.
6. COORDINATE YARD PIPING LOCATIONS WITH ELECTRICAL, SEE DWGS 590-E-06 THROUGH 590-E-11.

RECORD DRAWINGS

Revisions Drawn By R. FRIBERG Date 7/20/2001

THESE RECORD DRAWINGS HAVE BEEN PREPARED, IN PART, ON THE BASIS OF INFORMATION COMPILED BY OTHERS. THEY ARE NOT INTENDED TO REPRESENT IN DETAIL THE EXACT LOCATION, TYPE OF COMPONENT NOR MANNER OF CONSTRUCTION. THE ENGINEER WILL NOT BE RESPONSIBLE FOR ANY ERRORS OR OMISSIONS WHICH HAVE BEEN INCORPORATED INTO THE RECORD DRAWINGS.

ADDITIONAL REVISION NOTATIONS

5	11/01	RECORD DRAWING	BJM	RBF
5	8/01	CIR NO. 276	RBF	JMP

The Contract Document Drawings are printed documents dated Feb. 1999, as subsequently amended, which define the scope, extent, and character of the work. The original document drawing was sealed & signed by William B. Wagner, State of Oregon, P.E. No. 10,642, dated July 18, 1980.

DSGN JA NESSL
DR LG McCALL
CHK WB WAGNER
APVD J GOETZ

NO.	DATE	REVISION	BY	APVD
4	1/00	CIR NO. 144	RBF	JMP
3	9/99	CIR NO. 56	AJW	JMP
2	4/99	ADDENDUM NO. 5	DKE	JAN
1	3/99	ADDENDUM NO. 2	DKE	JAN

VERIFY SCALE
BAR IS ONE INCH ON ORIGINAL DRAWING.
0 1"
IF NOT ONE INCH ON THIS SHEET, ADJUST SCALES ACCORDINGLY.

CH2MHILL

ROCK CREEK FACILITY
EXPANSION - PHASE 5
PACKAGE A
UNIFIED SEWERAGE AGENCY
WASHINGTON COUNTY, OREGON

CIVIL
YARD PIPING PLAN

SHEET	34
DWG	5A5-CY-09
DATE	FEB 1999
PROJ	146190

REUSE OF DOCUMENTS: THIS DOCUMENT, AND THE IDEAS AND DESIGNS INCORPORATED HEREIN, AS AN INSTRUMENT OF PROFESSIONAL SERVICE, IS THE PROPERTY OF CH2M HILL AND IS NOT TO BE USED, WHOLE OR IN PART, FOR ANY OTHER PROJECT WITHOUT THE WRITTEN AUTHORIZATION OF CH2M HILL. © CH2M HILL

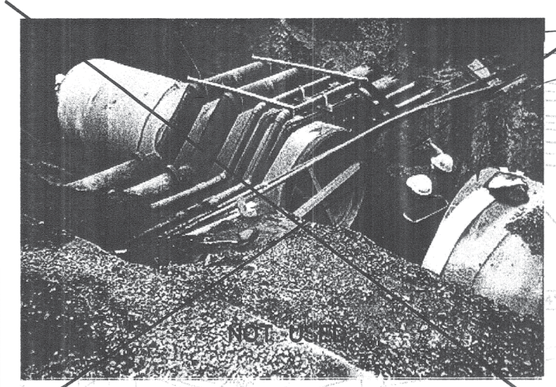

2 - 12" BWR
4 - 2" PVC, TYP
72" PE

DETAIL 1
NTS

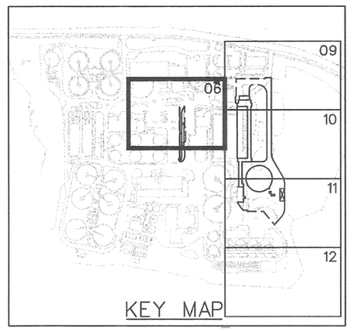

0 20 40 60
SCALE IN FEET

NOTES:

1. EXISTING UNDERGROUND UTILITIES OBTAINED FROM AS-BUILTS. CONTRACTOR SHALL FIELD VERIFY DEPTH AND LOCATION AT CONSTRUCTION CROSSINGS PRIOR TO EXCAVATION.
2. UNLESS OTHERWISE SHOWN, ALL PIPING SHALL HAVE A MINIMUM OF 36" COVER.
3. ALL PIPES SHALL HAVE A CONSTANT SLOPE BETWEEN INVERT ELEVATIONS UNLESS A FITTING IS SHOWN.
4. VERTICAL BENDS IN PLANT PRESSURE PIPING MAY BE REQUIRED TO AVOID CONFLICTS WITH NEW OR EXISTING UTILITIES. THESE VERTICAL BENDS ARE GENERALLY NOT SHOWN ON THE DRAWING; HOWEVER, THE CONTRACTOR SHALL PROVIDE THEM AT NO ADDITIONAL COST TO THE OWNER.
5. FOR TRENCHING AND BACKFILL, SEE (15802) AND (15803).
6. COORDINATE YARD PIPING LOCATIONS WITH ELECTRICAL, SEE DWGS 590-E-06 THROUGH 590-E-11.
7. EXISTING 72" PE IS CONCRETE CYLINDER PIPE WITH THRUST RESTRAINT.
8. SEE SPECIFICATION 01040 FOR SHUTDOWN CONSTRAINTS.

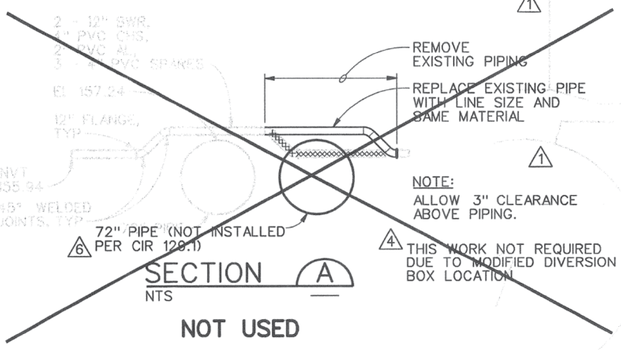

SECTION A
NTS

SEPTAGE RECEIVING STATION

CAP 1" IRRIGATION LINE (NOT SHOWN). PLACE 2"x2"X4' STAKE AT LOCATION OF CAP

DIGESTER COMPLEX

4 RELOCATED DIVERSION BOX, CIR NO. 129.1 SEE 5A5-C-404

3 REPLACE CB •43 & •44 WITH SUMPED CB

1 ALL PIPES 4.5 BELOW AC SURFACE

DUCT BANK 8" PW 2.5' BELOW AC SURFACE

PE-PE-001

PE-PE-002

1 RESTORE CATCH BASIN, PAVEMENT, CURB AND LANDSCAPING TO ORIGINAL CONDITION (15803) SEE CIR NO. 148.1 5

(44) BLOWER BUILD SEE DWG 544-M-131

DELETE 72" PIPE 4

SEE PROFILE, DWG 5A5-C-403

RELOCATE DIVERSION BOX, AS PER CIR NO. 129.1 4

EXST PIPING TO REMAIN IN SERVICE. SEE NOTE 2 ON DWG 5A5-C-403

CB •1
N 6338.00
E 3393.32
RIM EL 158.81
INVT 156.03
(2041)

1 1/2" PIPE SADDLE

1 1/2"PW

SCH 80 PVC

8" SS

(15154) NON-FREEZE HYDRANT
(15720) HOSE RACK SEE PLAN

CB •2
N 6307.10
E 3385.54
RIM EL 158.57
INVT 156.03
(2041)

TRUCK SCALE

CONNECT 8" SS TO EXISTING CATCH BASIN, INVT 155.95, (2040)

8"PD

8"PD

REMOVE IRRIGATION VAULT, REMOVE EXISTING IRRIGATION PIPING AT EXCAVATION, TYP

CONNECT 8" SS TO EXISTING CATCH BASIN, INVT 155.95, (2040)

2 PLUG EXISTING 8" SS AND ROUTE NEW 8"PD TO MANHOLE TYP OF 2. CORRDINATE I.E.'S AND GRADES WITH ENGINEER

CHEMICAL BUILDING

MATCH LINE, SEE DWG 5A5-CY-09

MATCH LINE, SEE DWG 5A5-CY-10

REUSE OF DOCUMENTS: THIS DOCUMENT, AND THE IDEAS AND DESIGNS INCORPORATED HEREIN, AS AN INSTRUMENT OF PROFESSIONAL SERVICE, IS THE PROPERTY OF CH2M HILL AND IS NOT TO BE USED, WHOLE OR IN PART, FOR ANY OTHER PROJECT WITHOUT THE WRITTEN AUTHORIZATION OF CH2M HILL. © CH2M HILL

ADDITIONAL REVISION NOTATIONS

	11/01	RECORD DRAWING	BJM	RBF
6	9/01	CIR. NO. 275	JFM	JMP
5	3/00	CIR NO. 148.1	RBF	JMP

RECORD DRAWINGS

Revisions Drawn By B.J. MCCORKLE Date 7/13/2001

THESE RECORD DRAWINGS HAVE BEEN PREPARED, IN PART, ON THE BASIS OF INFORMATION COMPILED BY OTHERS. THEY ARE NOT INTENDED TO REPRESENT IN DETAIL THE EXACT LOCATION, TYPE OF COMPONENT NOR MANNER OF CONSTRUCTION. THE ENGINEER WILL NOT BE RESPONSIBLE FOR ANY ERRORS OR OMISSIONS WHICH HAVE BEEN INCORPORATED INTO THE RECORD DRAWINGS.

The Contract Document Drawings are printed documents dated Feb. 1999, as subsequently amended, which define the scope, extent, and character of the work. The original document drawing was sealed & signed by William B. Wagner, State of Oregon, P.E. No. 10,642, dated July 18, 1980.

DSGN	JA NESSL			
DR	LG McCALL			
CHK	WB WAGNER			
APVD	J GOETZ			

NO.	DATE	REVISION	BY	APVD
4	2/00	CIR NO. 129.1	RBF	JMP
3	1/00	CIR NO. 148	RBF	JMP
2	1/00	CIR NO. 64.1	RBF	JMP
1	4/99	ADDENDUM NO. 5	DKE	JAN

VERIFY SCALE
BAR IS ONE INCH ON ORIGINAL DRAWING.
0 1"
IF NOT ONE INCH ON THIS SHEET, ADJUST SCALES ACCORDINGLY.

CH2MHILL

ROCK CREEK FACILITY
EXPANSION - PHASE 5
PACKAGE A
UNIFIED SEWERAGE AGENCY
WASHINGTON COUNTY, OREGON

CIVIL
YARD PIPING PLAN

SHEET	33
DWG	5A5-CY-06
DATE	FEB 1999
PROJ	146190

r5r5bxrder.mst 1-45, 47, 50-60, 63-63
r5r5bxkey.mst 2-6, 19, 21, 26, 35-36, 46, 49-53
r5r5dcpp.mst 32, 34
r5r5dcpp.mst 2-8, 12-19, 21-39, 43-57, 61
r5r5dckey.mst 32-35, 46, 61
r5r5dckey.mst 1-63
r5r5dcpy.mst 47, 50-51, 61

//CVONT1/prj/unified sewerage agency/rock creek phase 5/CAD/drawings/r5a5cy06.dlv PLOT DATE: 03-DEC-2001 PLOT TIME: 13:47:56

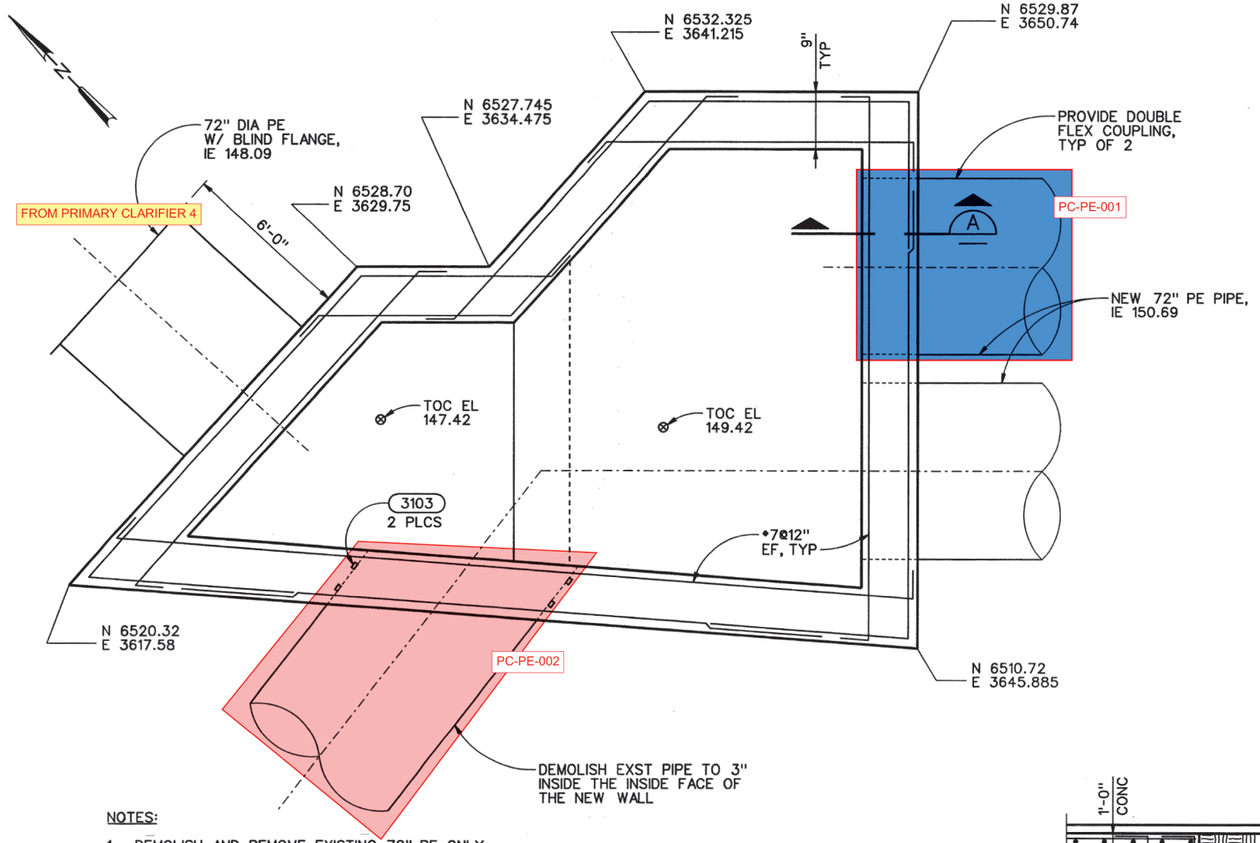

NOTES:

1. DEMOLISH AND REMOVE EXISTING 72" PE ONLY AFTER ALL WALLS HAVE ACHIVED 28 DAY COMPRESSIVE STRENGTH OF 4000 PSI.
2. ROOF SLAB LL = HS20

FOUNDATION PLAN (2)
3/8"=1'-0"

NOTE:

(2) ORIGINAL DIVERSION BOX DESIGN (AS SHOWN IN BID DOCUMENTS) SUPERCEDED BY THE PLANS AND SECTIONS SHOWN ON THIS SHEET.

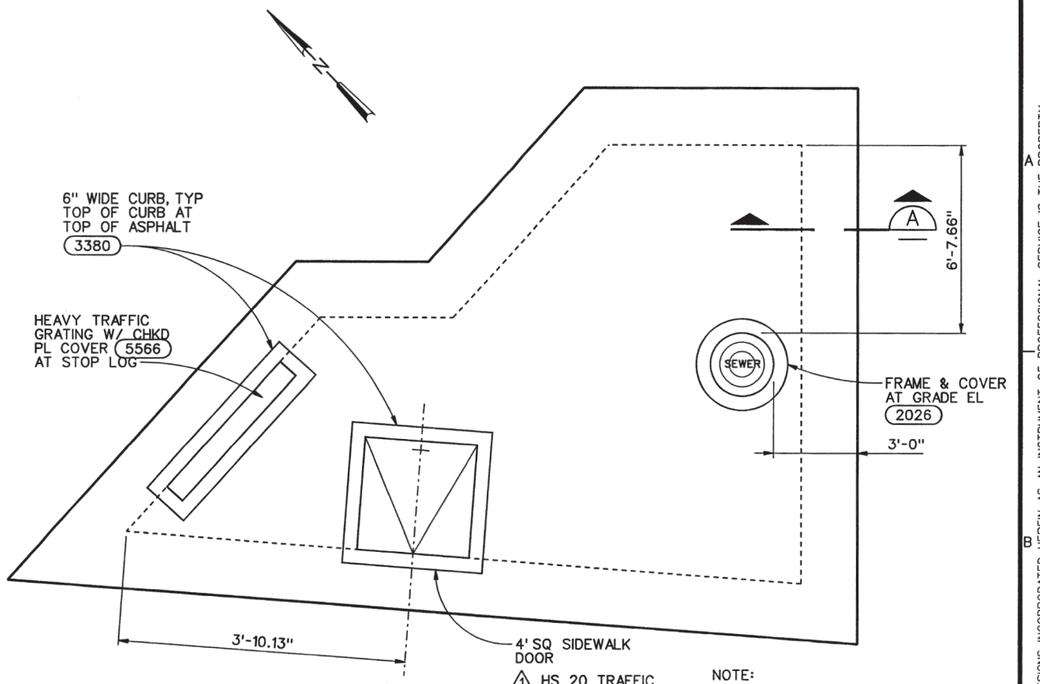

(1) HS 20 TRAFFIC

NOTE:
REINFORCE ALL SLAB OPENINGS PER 3301

ROOF PLAN (2)
3/8"=1'-0"

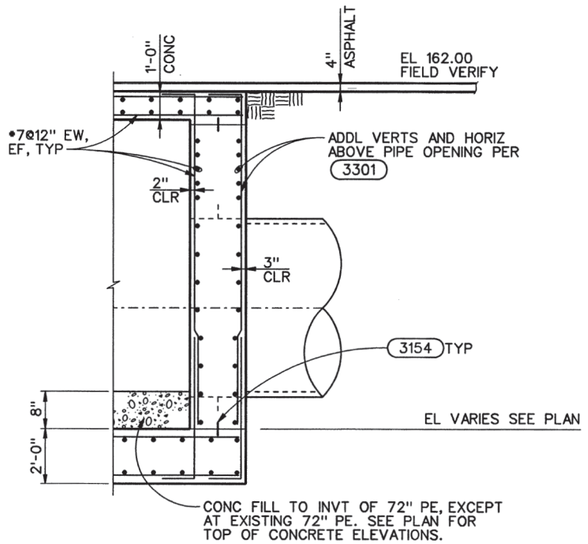

SECTION (2) A
3/8"=1'-0"

NOTE:
WHERE NEW PIPE STUB IS LOCATED BENEATH EXISTING CONC DUCT BANK, FILL VOID BETWEEN PIPE AND DUCT BANK WITH CDF.

RECORD DRAWINGS

Revisions Drawn By FRANCIS MAK Date 7/11/2001

THESE RECORD DRAWINGS HAVE BEEN PREPARED, IN PART, ON THE BASIS OF INFORMATION COMPILED BY OTHERS. THEY ARE NOT INTENDED TO REPRESENT IN DETAIL THE EXACT LOCATION, TYPE OF COMPONENT NOR MANNER OF CONSTRUCTION. THE ENGINEER WILL NOT BE RESPONSIBLE FOR ANY ERRORS OR OMISSIONS WHICH HAVE BEEN INCORPORATED INTO THE RECORD DRAWINGS.

The Contract Document Drawings are printed documents dated Feb. 1999, as subsequently amended, which define the scope, extent, and character of the work. The original document drawing was sealed & signed by Alex L. Firth, State of Oregon, P.E. No. 15977, dated July 21, 1992.

DSGN AL FIRTH						VERIFY SCALE
DR EJ PUIG						BAR IS ONE INCH ON ORIGINAL DRAWING. 0 1"
CHK SM FREY	(2)	11/01	RECORD DRAWING	BJM	RBF	IF NOT ONE INCH ON THIS SHEET, ADJUST SCALES ACCORDINGLY.
APVD J GOETZ	(1)	12/99	CIR NO. 122	PWB	JMP	
	NO.	DATE	REVISION	BY	APVD	

CH2MHILL

ROCK CREEK FACILITY
EXPANSION - PHASE 5
PACKAGE A

UNIFIED SEWERAGE AGENCY
WASHINGTON COUNTY, OREGON

CIVIL

YARD PIPING DETAILS

SHEET	42
DWG	5A5-C-404
DATE	FEB 1999
PROJ	146190

REUSE OF DOCUMENTS: THIS DOCUMENT, AND THE IDEAS AND DESIGNS INCORPORATED HEREIN, AS AN INSTRUMENT OF PROFESSIONAL SERVICE, IS THE PROPERTY OF CH2M HILL AND IS NOT TO BE USED, WHOLE OR IN PART, FOR ANY OTHER PROJECT WITHOUT THE WRITTEN AUTHORIZATION OF CH2M HILL. © CH2M HILL

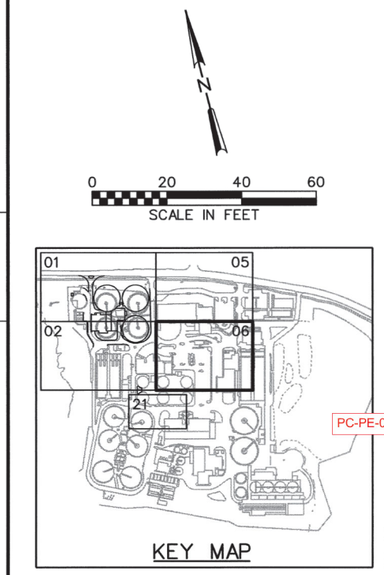

KEY MAP

NOTES:

1. EXISTING UNDERGROUND UTILITIES OBTAINED FROM AS-BUILTS. CONTRACTOR SHALL FIELD VERIFY DEPTH AND LOCATION AT CONSTRUCTION CROSSINGS PRIOR TO EXCAVATION.
2. UNLESS OTHERWISE SHOWN, ALL PIPING SHALL HAVE A MINIMUM OF 36" COVER.
3. ALL PIPES SHALL HAVE A CONSTANT SLOPE BETWEEN INVERT ELEVATIONS UNLESS A FITTING IS SHOWN.
4. VERTICAL BENDS IN PLANT PRESSURE PIPING MAY BE REQUIRED TO AVOID CONFLICTS WITH NEW OR EXISTING UTILITIES. THESE VERTICAL BENDS ARE GENERALLY NOT SHOWN ON THE DRAWING; HOWEVER, THE CONTRACTOR SHALL PROVIDE THEM AT NO ADDITIONAL COST TO THE OWNER.
5. FOR TRENCHING, BACKFILL AND SURFACE RESTORATION, SEE (15802) AND (15803).
6. CONTRACT 5A HAS WORK IN THIS AREA. COORDINATE TIMING OF WORK TO AVOID CONFLICTS AND REWORK IN ADJACENT WORK AREAS.
7. COORDINATE ALL YARD PIPING LOCATIONS WITH ELECTRICAL, SEE DWGS 590-E-01 THROUGH 590-E-12.

MATCH LINE, SEE DWG 5B5-CY-02

MATCH LINE, SEE DWG 5B5-CY-05

CONC. BULKHEAD

PLUG AND ABANDON EXISTING PIPING

PROTECT EXISTING CURB AND GUTTER

PC-PE-001

PC-PE-002

PC-PE-003

349'-1 3/4"

12" 90° ELB, CONNECT TO EXISTING, INVT 162.3± (FIELD VERIFY) ABANDON 12" PIPE WEST OF CONNECTION

16" - 11 1/4° ELBOW

2" TEE, CONNECT TO EXISTING, APPROX 3' OF COVER (FIELD VERIFY), CAP, ABANDON PIPE TO EXST CHANNEL.

90° ELBOW, CONNECT TO EXISTING, INVT 164.2± (FIELD VERIFY)

PLUG AND ABANDON EXISTING 16" SPR, BEYOND CONNECTION

(34) RECTANGULAR PRIMARY CLARIFIER

RESTORE AC PAVEMENT (15803)

EXST 1 1/2" PVC

EXST 3/4" AHP

EXST 2" PVC

1 1/2"NAOH

INVT 162.60

3' MINIMUM COVER

(97) SEPTAGE RECEIVING STATION, SEE DWG 597-ME-131

EXST 8" DIP

SEE NOTE 6

CL EL 160.25

(72) DIGESTER COMPLEX

(35) CHEMICAL BUILDING, SEE DWGS 535-ME-131 THROUGH 535-ME-134

RECORD DRAWINGS

Revisions Drawn By C.R. COSBY **Date** NOV 2003

THESE RECORD DRAWINGS HAVE BEEN PREPARED, IN PART, ON THE BASIS OF INFORMATION COMPILED BY OTHERS. THEY ARE NOT INTENDED TO REPRESENT IN DETAIL THE EXACT LOCATION, TYPE OF COMPONENT NOR MANNER OF CONSTRUCTION. THE ENGINEER WILL NOT BE RESPONSIBLE FOR ANY ERRORS OR OMISSIONS WHICH HAVE BEEN INCORPORATED INTO THE RECORD DRAWINGS.

REUSE OF DOCUMENTS: THIS DOCUMENT, AND THE IDEAS AND DESIGNS INCORPORATED HEREIN, AS AN INSTRUMENT OF PROFESSIONAL SERVICE, IS THE PROPERTY OF CH2M HILL AND IS NOT TO BE USED, WHOLE OR IN PART, FOR ANY OTHER PROJECT WITHOUT THE WRITTEN AUTHORIZATION OF CH2M HILL. © CH2M HILL

The Contract Document Drawings are printed documents dated July 1999, as subsequently amended, which define the scope, extent, and character of the work. The original document drawing was sealed & signed by William B. Wagner, State of Oregon, P. E. No. 10642, dated July 18, 1980.

NO.	DATE	REVISION	BY	APVD
	11/03	RECORD DRAWING	CRC	LJP
1	6/02	CIR NO. 637	TGB	LJP

DSGN JA NESSL
DR LG McCALL
CHK WB WAGNER
APVD J GOETZ

VERIFY SCALE
BAR IS ONE INCH ON ORIGINAL DRAWING.
0 1"
IF NOT ONE INCH ON THIS SHEET, ADJUST SCALES ACCORDINGLY.

CH2MHILL

ROCK CREEK FACILITY
EXPANSION - PHASE 5
PACKAGE B
UNIFIED SEWERAGE AGENCY
WASHINGTON COUNTY, OREGON

CIVIL
YARD PIPING PLAN

SHEET	48
DWG	5B5-CY-06
DATE	JULY 1999
PROJ	146190

//CVONT1/prj/unified sewerage agency/rock creek phase 5/CAD/drawings/r5b5cy06.dlv PLOT DATE: 02-JUN-2004 PLOT TIME: 09:15:24

r5r590cep1.mst	2-8, 12-19, 21-36, 42, 50-51	stamp/stor...white.dgn
r5r59c5cpp.mst	32-35, 46, 61	r5r59border.mst
r5r590cey1.mst	1, 10, 15-27, 38, 57	r5r590key.mst
r5r59c5cpy.mst	8, 47, 59, 61	r5r59c5cpp.mst
	1-4	
	1-2, 48, 60	
	2-6, 19, 21, 26, 31, 35-36, 41-42, 45-46, 53	
	32, 34	

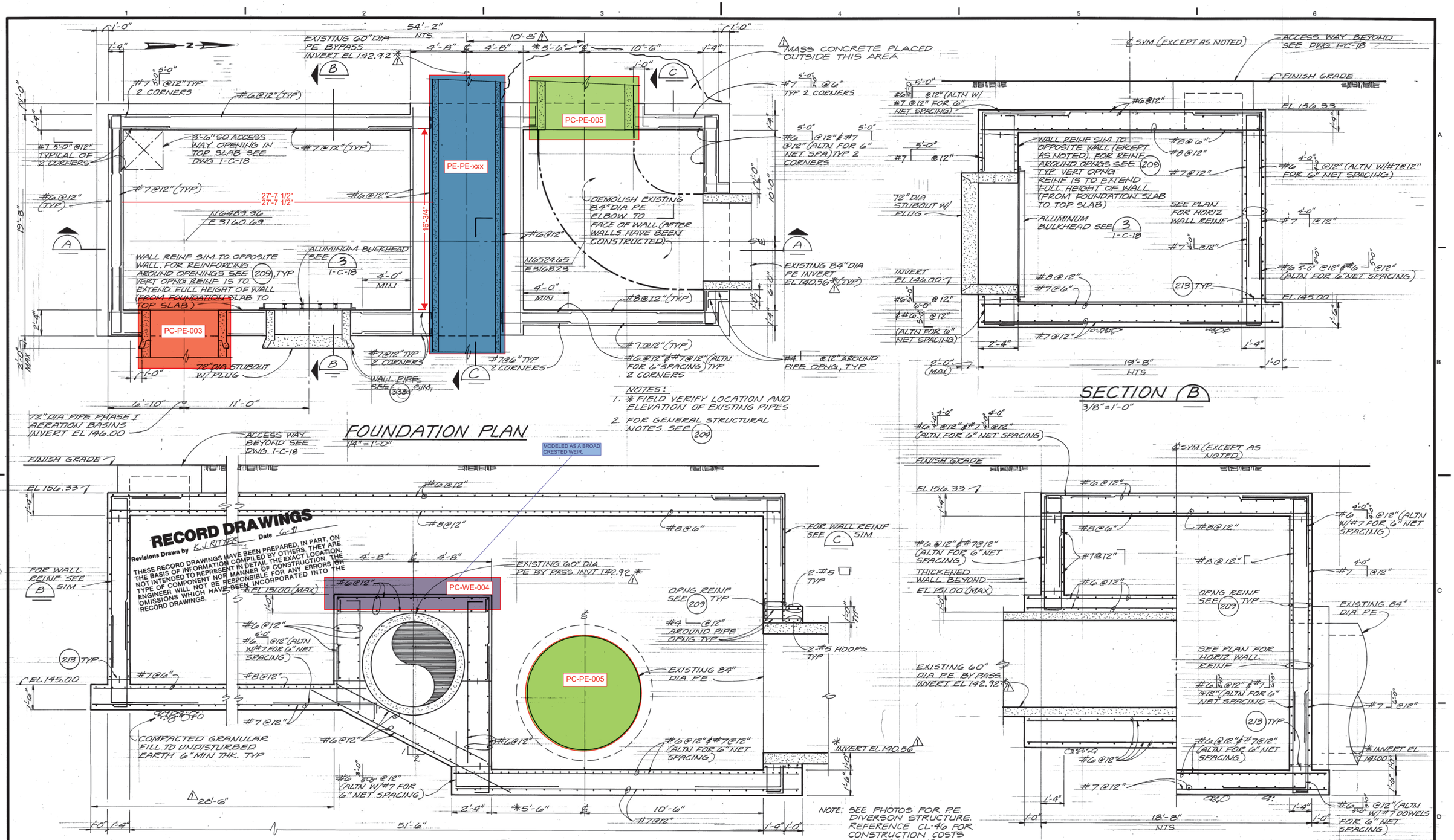

RECORD DRAWINGS

Revisions Drawn by K.J.RITTER Date 6-91

THESE RECORD DRAWINGS HAVE BEEN PREPARED, IN PART, ON THE BASIS OF INFORMATION COMPILED BY OTHERS. THEY ARE NOT INTENDED TO REPRESENT IN DETAIL THE EXACT LOCATION, TYPE OF COMPONENT NOR MANNER OF CONSTRUCTION. THE ENGINEER WILL NOT BE RESPONSIBLE FOR ANY ERRORS OR OMISSIONS WHICH HAVE BEEN INCORPORATED INTO THE RECORD DRAWINGS.

REGISTERED PROFESSIONAL ENGINEER 11,908 OREGON Dec. 3, 1982 STEVEN E. DOHLEMAN

Steven E. Dohleman

CH2M HILL

DSGN	S.E.DOHLEMAN
DR	T.W.MCINTYRE
CHK	S.M.FREY
APVD	W.BRACKEN

NO.	DATE	REVISION	BY	APVD
	6-91	RECORD DRAWINGS	JBL	RMB
1	11-87	CLARIFICATION CL-46	JBL	RMB

REUSE OF DOCUMENTS

THIS DOCUMENT, AND THE IDEAS AND DESIGNS INCORPORATED HEREIN, AS AN INSTRUMENT OF PROFESSIONAL SERVICE, IS THE PROPERTY OF CH2M HILL AND IS NOT TO BE USED, IN WHOLE OR IN PART, FOR ANY OTHER PROJECT WITHOUT THE WRITTEN AUTHORIZATION OF CH2M HILL.

©CH2M HILL

VERIFY SCALES

BAR IS ONE INCH ON ORIGINAL DRAWING. 0 1"

IF NOT ONE INCH ON THIS SHEET, ADJUST SCALES ACCORDINGLY.

ROCK CREEK
ADVANCED WASTEWATER TREATMENT PLANT
UNIFIED SEWERAGE AGENCY
WASHINGTON COUNTY, OREGON

PHASE 1 EXPANSION
CIVIL

PE DIVERSION BOX — PLAN AND SECTIONS

SHEET	28
DWG NO.	1-C-17
DATE	APRIL, 1987
PROJ NO.	P21262.B1

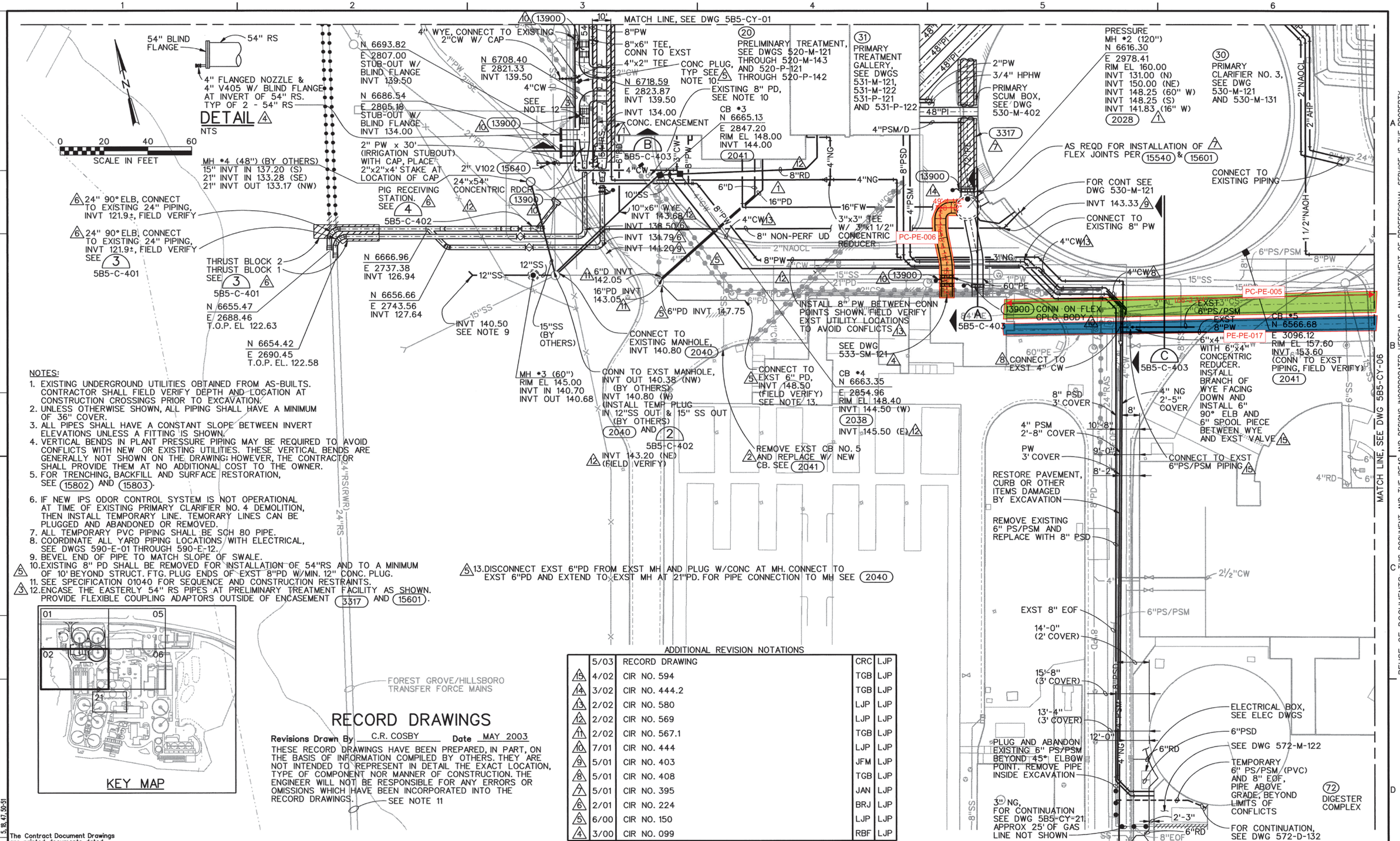

NOTES:

1. EXISTING UNDERGROUND UTILITIES OBTAINED FROM AS-BUILTS. CONTRACTOR SHALL FIELD VERIFY DEPTH AND LOCATION AT CONSTRUCTION CROSSINGS PRIOR TO EXCAVATION.
2. UNLESS OTHERWISE SHOWN, ALL PIPING SHALL HAVE A MINIMUM OF 36" COVER.
3. ALL PIPES SHALL HAVE A CONSTANT SLOPE BETWEEN INVERT ELEVATIONS UNLESS A FITTING IS SHOWN.
4. VERTICAL BENDS IN PLANT PRESSURE PIPING MAY BE REQUIRED TO AVOID CONFLICTS WITH NEW OR EXISTING UTILITIES. THESE VERTICAL BENDS ARE GENERALLY NOT SHOWN ON THE DRAWING; HOWEVER, THE CONTRACTOR SHALL PROVIDE THEM AT NO ADDITIONAL COST TO THE OWNER.
5. FOR TRENCHING, BACKFILL AND SURFACE RESTORATION, SEE (15802) AND (15803).
6. IF NEW IPS ODOR CONTROL SYSTEM IS NOT OPERATIONAL AT TIME OF EXISTING PRIMARY CLARIFIER NO. 4 DEMOLITION, THEN INSTALL TEMPORARY LINE. TEMORARY LINES CAN BE PLUGGED AND ABANDONED OR REMOVED.
7. ALL TEMPORARY PVC PIPING SHALL BE SCH 80 PIPE.
8. COORDINATE ALL YARD PIPING LOCATIONS WITH ELECTRICAL, SEE DWGS 590-E-01 THROUGH 590-E-12.
9. BEVEL END OF PIPE TO MATCH SLOPE OF SWALE.
10. EXISTING 8" PD SHALL BE REMOVED FOR INSTALLATION OF 54"RS AND TO A MINIMUM OF 10' BEYOND STRUCT. FTG. PLUG ENDS OF EXST 8"PD W/MIN. 12" CONC. PLUG.
11. SEE SPECIFICATION 01040 FOR SEQUENCE AND CONSTRUCTION RESTRAINTS.
12. ENCASE THE EASTERLY 54" RS PIPES AT PRELIMINARY TREATMENT FACILITY AS SHOWN. PROVIDE FLEXIBLE COUPLING ADAPTORS OUTSIDE OF ENCASEMENT 3317 AND (15601).
13. DISCONNECT EXST 6"PD FROM EXST MH AND PLUG W/CONC AT MH. CONNECT TO EXST 6"PD AND EXTEND TO EXST MH AT 21"PD. FOR PIPE CONNECTION TO MH SEE (2040)

KEY MAP

RECORD DRAWINGS

Revisions Drawn By C.R. COSBY **Date** MAY 2003

THESE RECORD DRAWINGS HAVE BEEN PREPARED, IN PART, ON THE BASIS OF INFORMATION COMPILED BY OTHERS. THEY ARE NOT INTENDED TO REPRESENT IN DETAIL THE EXACT LOCATION, TYPE OF COMPONENT NOR MANNER OF CONSTRUCTION. THE ENGINEER WILL NOT BE RESPONSIBLE FOR ANY ERRORS OR OMISSIONS WHICH HAVE BEEN INCORPORATED INTO THE RECORD DRAWINGS.

ADDITIONAL REVISION NOTATIONS

	5/03	RECORD DRAWING	CRC	LJP
15	4/02	CIR NO. 594	TGB	LJP
14	3/02	CIR NO. 444.2	TGB	LJP
13	2/02	CIR NO. 580	LJP	LJP
12	2/02	CIR NO. 569	LJP	LJP
11	2/02	CIR NO. 567.1	TGB	LJP
10	7/01	CIR NO. 444	LJP	LJP
9	5/01	CIR NO. 403	JFM	LJP
8	5/01	CIR NO. 408	TGB	LJP
7	5/01	CIR NO. 395	JAN	LJP
6	2/01	CIR NO. 224	BRJ	LJP
5	6/00	CIR NO. 150	LJP	LJP
4	3/00	CIR NO. 099	RBF	LJP

The Contract Document Drawings are printed documents dated July, 1999, as subsequently amended, which define the scope, extent, and character of the work. The original document drawing was sealed & signed by William B. Wagner, State of Oregon, P.E. No. 10,642, dated July 18, 1980.

DSGN	DR	CHK	APVD
JA NESSL	LG McCALL	WB WAGNER	J GOETZ

NO.	DATE	REVISION	BY	APVD
3	2/00	CIR NO. 055	BAY	LJP
2	1/00	CIR NO. 058	LJP	JMP
1	12/99	CIR NO. 026	AGO	LJP

VERIFY SCALE
BAR IS ONE INCH ON ORIGINAL DRAWING. 0 1"
IF NOT ONE INCH ON THIS SHEET, ADJUST SCALES ACCORDINGLY.

CH2MHILL

ROCK CREEK FACILITY
EXPANSION - PHASE 5
PACKAGE B
UNIFIED SEWERAGE AGENCY
WASHINGTON COUNTY, OREGON

CIVIL
YARD PIPING PLAN

SHEET	46
DWG	5B5-CY-02
DATE	JULY 1999
PROJ	146190

r5r505sep1.mst 2-6, 8, 12-15, 17-19, 21-36, 50-51
r5r505sep.mst 32-36, 46, 61
r5r505cyr1.mst 1, 10, 15-27, 29, 38, 57
r5r505cyr.mst 5, 18, 47, 50-51
r5r505key.mst 2-6, 19, 21, 26, 31, 35-36, 41-42, 45-46, 53
r5r505border.mst 1-2, 48, 60
r5r505opp.mst 32, 34

//CVONT1/prj/unified sewerage agency/rock creek phase 5/CAD/drawings/r5b5cy02.dlv PLOT DATE: 02-JUN-2004 PLOT TIME: 09:14:48

A PROPERTY OF CH2M HILL © CH2M HILL
REUSE OF DOCUMENTS: THIS DOCUMENT, AND THE IDEAS AND DESIGNS INCORPORATED HEREIN, AS AN INSTRUMENT OF PROFESSIONAL SERVICE, IS THE PROPERTY OF CH2M HILL AND IS NOT TO BE USED, WHOLE OR IN PART, FOR ANY OTHER PROJECT WITHOUT THE WRITTEN AUTHORIZATION OF CH2M HILL.

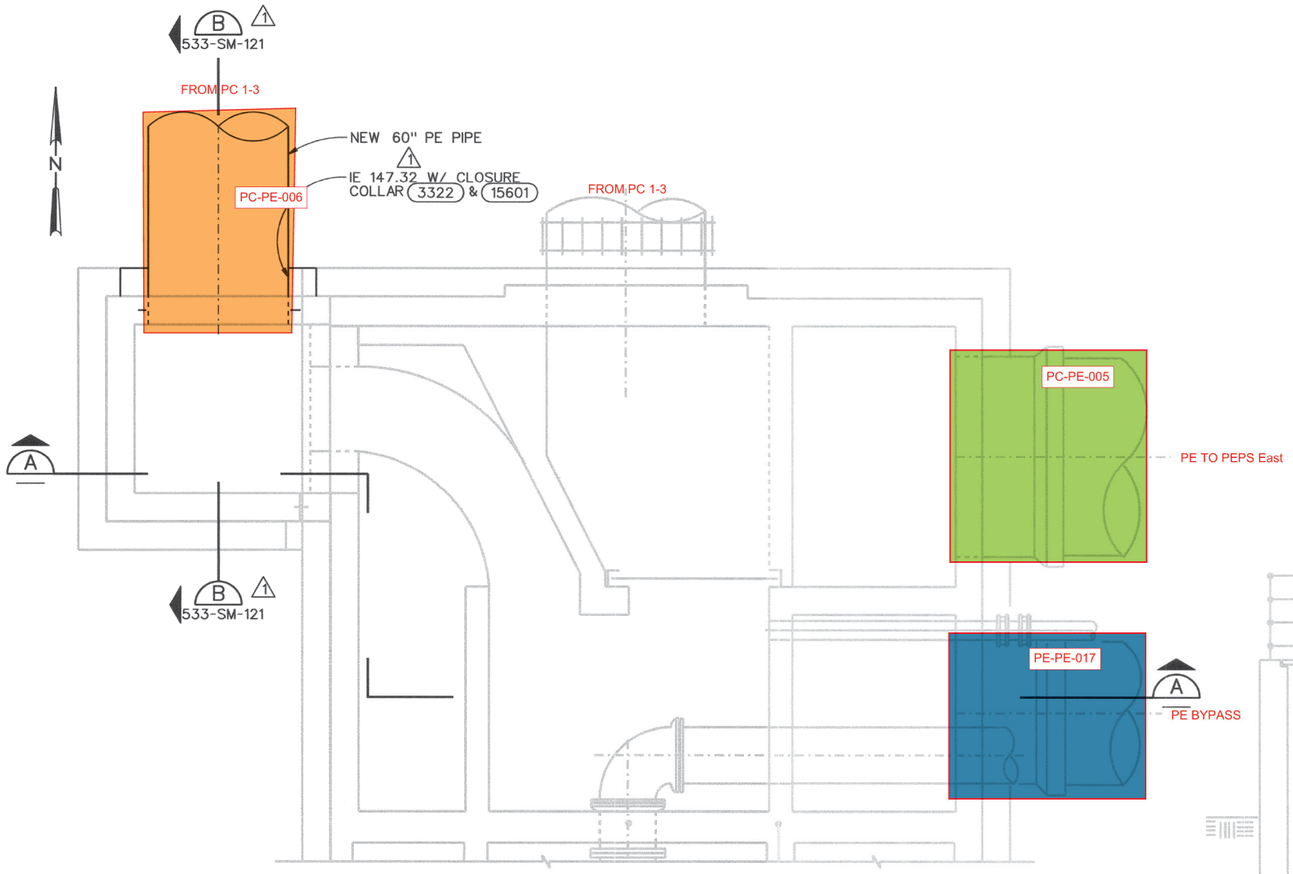

PLAN
3/8"=1'-0"

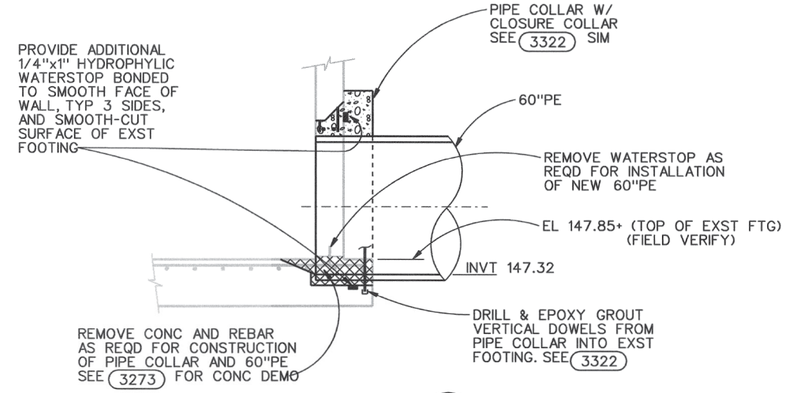

SECTION B
NTS
533-D-121
533-SM-121

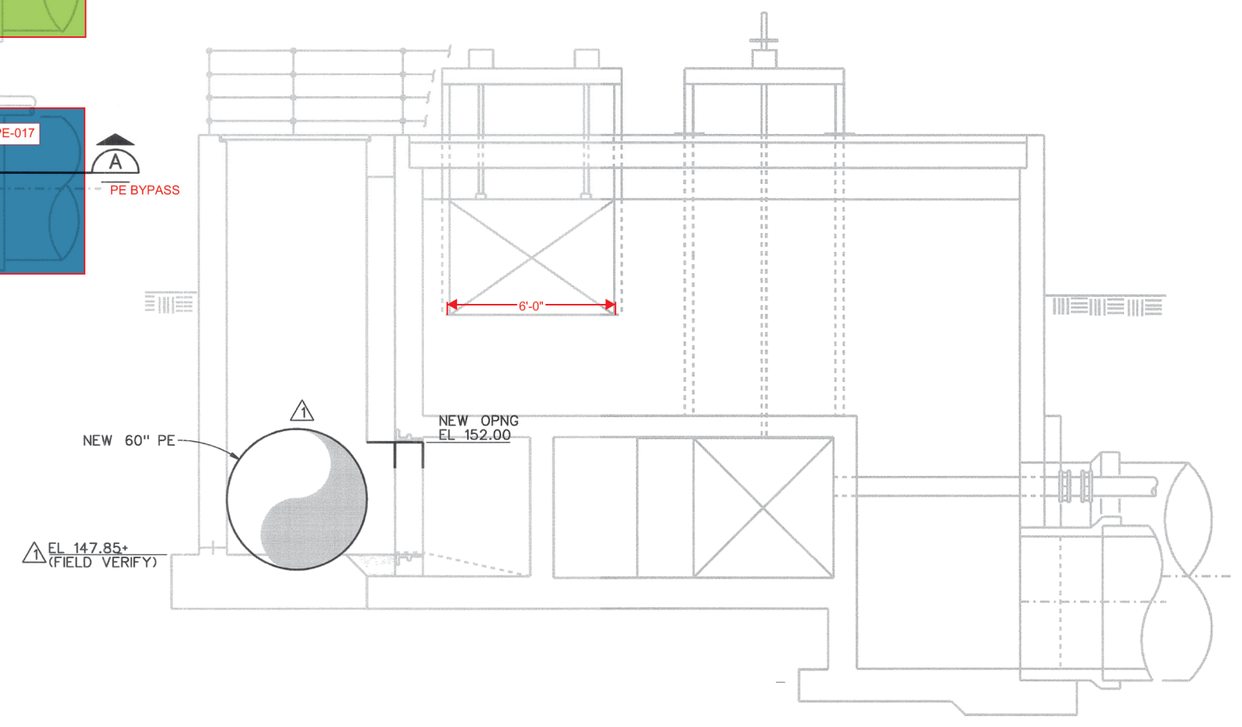

SECTION A
3/8"=1'-0"

RECORD DRAWINGS

Revisions Drawn By C.R. COSBY **Date** NOV 2003

THESE RECORD DRAWINGS HAVE BEEN PREPARED, IN PART, ON THE BASIS OF INFORMATION COMPILED BY OTHERS. THEY ARE NOT INTENDED TO REPRESENT IN DETAIL THE EXACT LOCATION, TYPE OF COMPONENT NOR MANNER OF CONSTRUCTION. THE ENGINEER WILL NOT BE RESPONSIBLE FOR ANY ERRORS OR OMISSIONS WHICH HAVE BEEN INCORPORATED INTO THE RECORD DRAWINGS.

The Contract Document Drawings are printed documents dated July 1999, as subsequently amended, which define the scope, extent, and character of the work. The original document drawing was sealed & signed by Alex L. Firth, State of Oregon, P. E. No. 15977, dated July 21, 1992.

DSGN	AL FIRTH					
DR	EJ PUIG		11/03	RECORD DRAWING	CRC	LJP
CHK	SM FREY	1	3/02	CIR NO. 581	LJP	LJP
APVD	J GOETZ	NO.	DATE	REVISION	BY	APVD

VERIFY SCALE
BAR IS ONE INCH ON ORIGINAL DRAWING.
0 1"
IF NOT ONE INCH ON THIS SHEET, ADJUST SCALES ACCORDINGLY.

CH2MHILL

ROCK CREEK FACILITY
EXPANSION - PHASE 5
PACKAGE B
UNIFIED SEWERAGE AGENCY
WASHINGTON COUNTY, OREGON

PRIMARY TREATMENT
STRUCTURA/MECHANICALL
PRIMARY EFFLUENT DISTRIBUTION BOX
PLAN AND SECTION

SHEET	351
DWG	533-SM-121
DATE	JULY 1999
PROJ	146190

REUSE OF DOCUMENTS: THIS DOCUMENT, AND THE IDEAS AND DESIGNS INCORPORATED HEREIN, AS AN INSTRUMENT OF PROFESSIONAL SERVICE, IS THE PROPERTY OF CH2M HILL AND IS NOT TO BE USED, WHOLE OR IN PART, FOR ANY OTHER PROJECT WITHOUT THE WRITTEN AUTHORIZATION OF CH2M HILL. © CH2M HILL

//CVONT1/prj/unified sewerage agency/rock creek phase 5/CAD/drawings/r533s121.dlv PLOT DATE: 03-JUN-2004 PLOT TIME: 12:16:42

CONTROL NO.

REVISIONS					
ZONE	REV	DESCRIPTION	BY	DATE	APP
	1	AS BUILT	WRJ	4/88	GRM

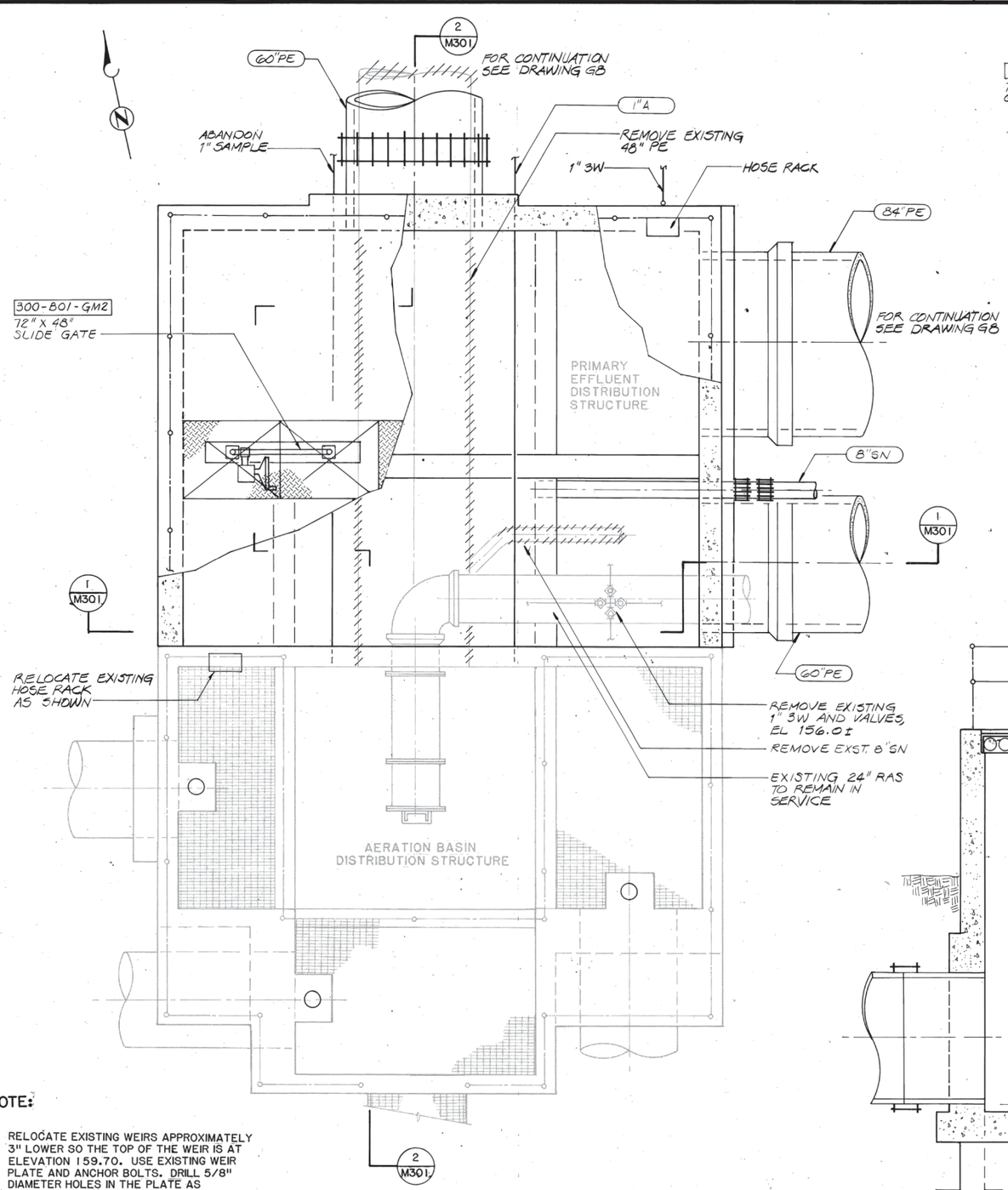

PLAN
SCALE: 3/8" = 1'-0

NOTE:

1. RELOCATE EXISTING WEIRS APPROXIMATELY 3" LOWER SO THE TOP OF THE WEIR IS AT ELEVATION 159.70. USE EXISTING WEIR PLATE AND ANCHOR BOLTS. DRILL 5/8" DIAMETER HOLES IN THE PLATE AS NECESSARY TO ACHIEVE DESIRED ELEVATION. COAL TAR EPOXY COAT WEIR PRIOR TO REINSTALLING.

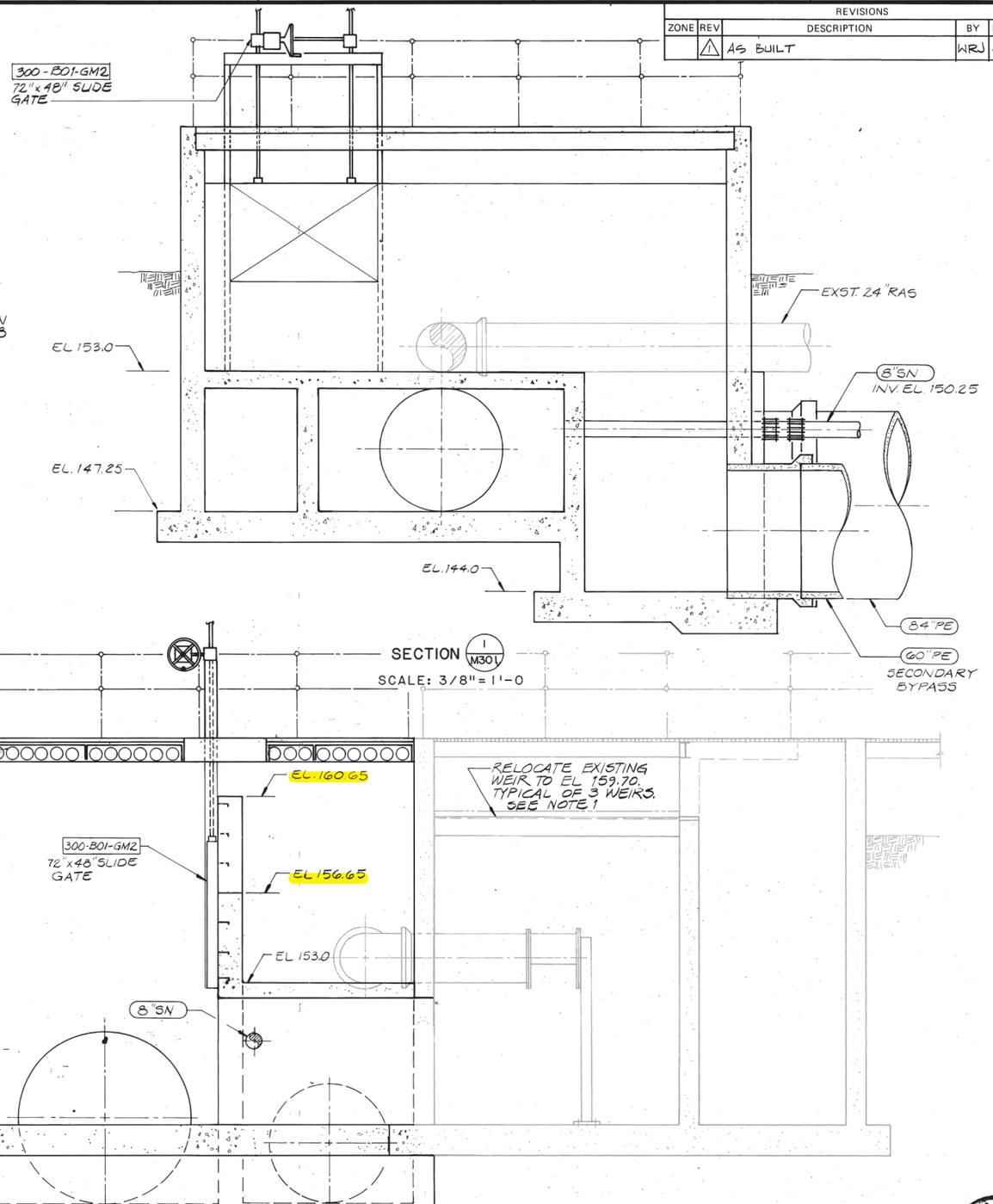

SECTION 1 M301
SCALE: 3/8" = 1'-0

SECTION 2 M301
SCALE: 3/8" = 1'-0

REGISTERED PROFESSIONAL ENGINEER 10442PE OREGON DEC. 15, 1989 WALTER J. MEYER

BROWN AND CALDWELL CONSULTING ENGINEERS EUGENE OREGON	FILE 2048	DESIGNED TRN	SUBMITTED	DATE 6/10/85	Unified Sewerage Agency of Washington County	ROCK CREEK ADVANCED WASTEWATER TREATMENT PLANT PRIMARY EXPANSION	PRIMARY EFFLUENT DISTRIBUTION STRUCTURE PLAN AND SECTIONS
	DATE JUNE 85	CHECKED GRM	APPROVED	DATE 6/10/85			
	DRAWN USM	CHECKED	APPROVED	DATE			

THIS LINE IS 1 INCH WHEN DRAWING IS FULL SIZE. IF NOT 1 INCH SCALE ACCORDINGLY.

DRAWING NUMBER M301
SHEET 92 OF 137 D

1090

PLOT DATE: 12-10-91
FILE NAME: R402S210.DGN

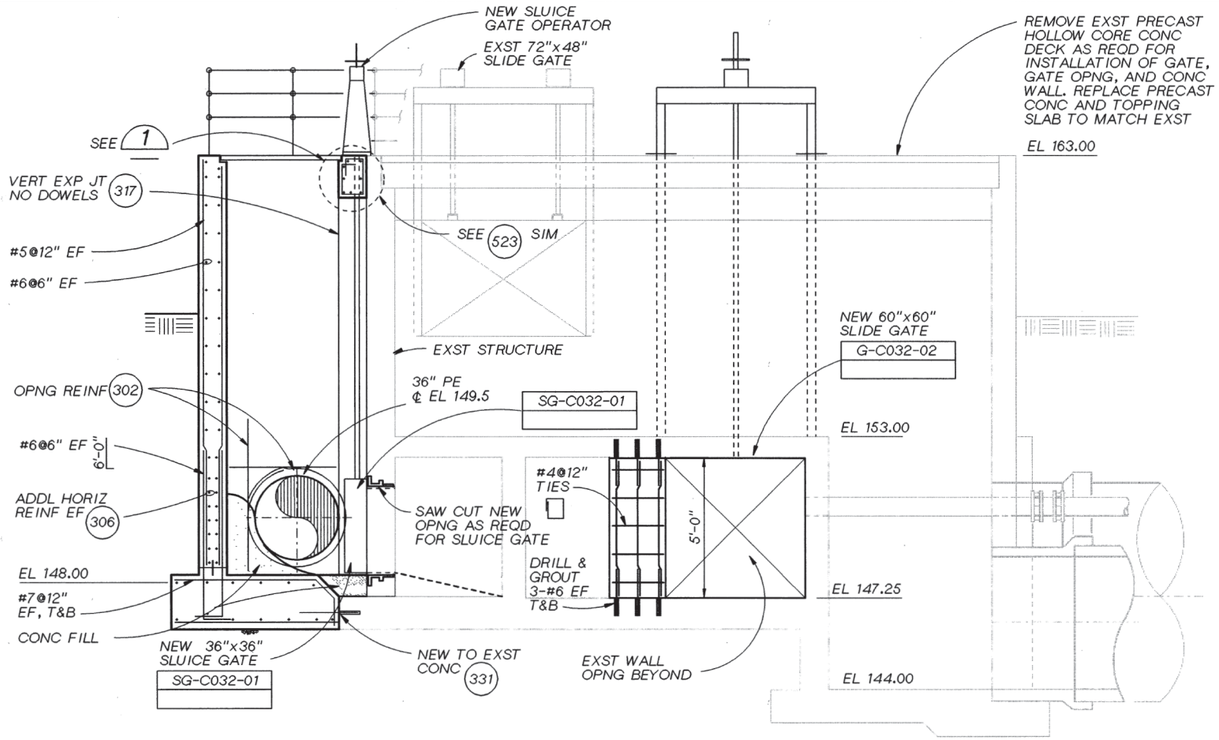

SECTION A
3/8"=1'-0" 2-SM-102

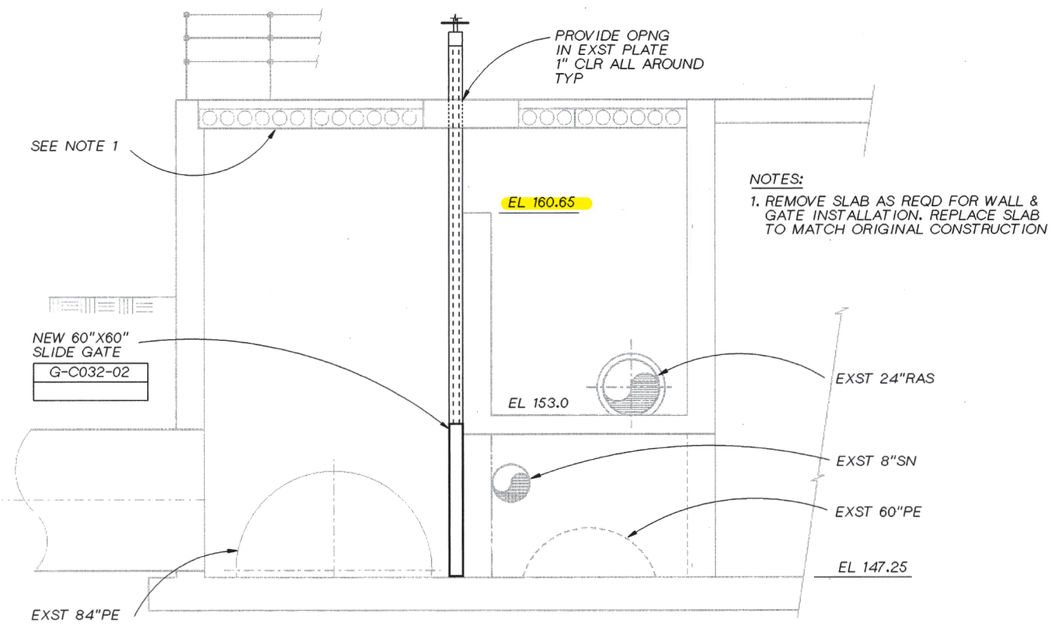

SECTION B
3/8"=1'-0" 2-SM-102

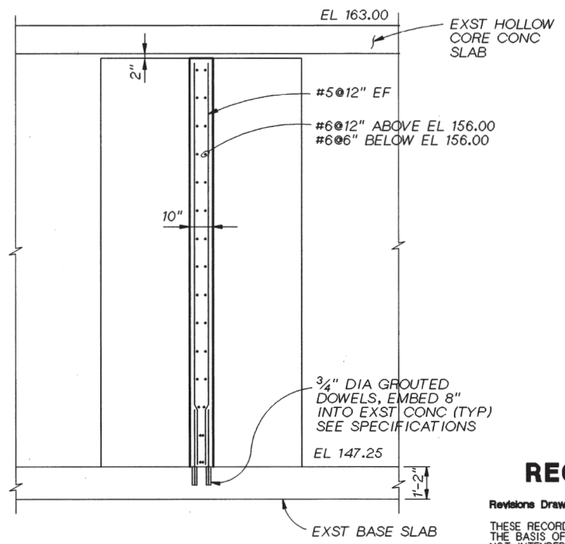

SECTION C
3/8" = 1'-0" 2-SM-102

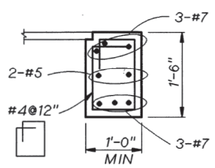

DETAIL 1
3/4"=1'-0"

RECORD DRAWINGS

Revisions Drawn By MJ PRICE Date JUNE 1995

THESE RECORD DRAWINGS HAVE BEEN PREPARED, IN PART, ON THE BASIS OF INFORMATION COMPILED BY OTHERS. THEY ARE NOT INTENDED TO REPRESENT IN DETAIL THE EXACT LOCATION, TYPE OF COMPONENT NOR MANNER OF CONSTRUCTION. THE ENGINEER WILL NOT BE RESPONSIBLE FOR ANY ERRORS OR OMISSIONS WHICH HAVE BEEN INCORPORATED INTO THE RECORD DRAWINGS.

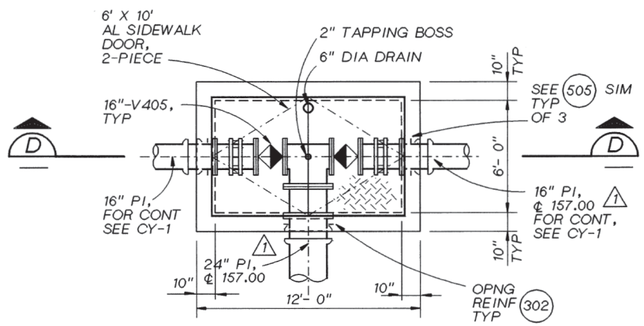

PRIMARY INFLUENT VALVE VAULT - PLAN
1/4" = 1'-0"

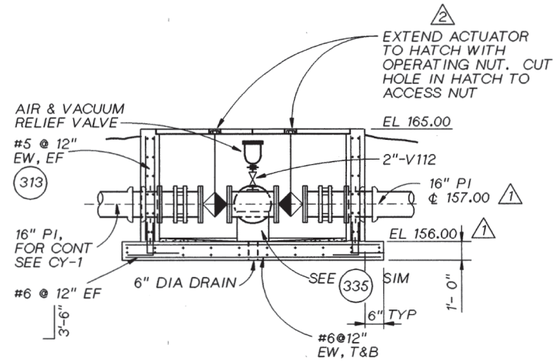

SECTION D
1/4" = 1'-0"

THE ORIGINAL DRAWING WAS STAMPED BY
J. DENNIS WERMCRANTZ
OREGON P.E. NO.
11845

CH2M HILL

DSGN	JL MCWADE D WERMCRANTZ
DR	LA BAXTER R402S210.DGN
CHK	DW RIPPON
APVD	RM BRACKEN

NO.	DATE	REVISION	BY	APVD
2	07-95	RECORD DRAWING	BAY	RMB
1	05-94	CLARIFICATION CL-P-1018		
	02-93	CLARIFICATION CL-P-291	AGM	

REUSE OF DOCUMENTS
THIS DOCUMENT, AND THE IDEAS AND DESIGNS INCORPORATED HEREIN, AS AN INSTRUMENT OF PROFESSIONAL SERVICE, IS THE PROPERTY OF CH2M HILL AND IS NOT TO BE USED, IN WHOLE OR IN PART, FOR ANY OTHER PROJECT WITHOUT THE WRITTEN AUTHORIZATION OF CH2M HILL.
©CH2M HILL

VERIFY SCALE
BAR IS ONE INCH ON ORIGINAL DRAWING.
0 1"
IF NOT ONE INCH ON THIS SHEET, ADJUST SCALES ACCORDINGLY.

ROCK CREEK FACILITY
UNIFIED SEWERAGE AGENCY
WASHINGTON COUNTY, OREGON

PHASE 4 EXPANSION - SOLIDS PROCESSING
PRIMARY CLARIFIERS
STRUCTURAL/MECHANICAL PRIMARY EFFLUENT DISTRIBUTION SECTIONS AND DETAILS

SHEET	85
DWG NO.	2-SM-201
DATE	DEC 1991
PROJ NO.	PDX21262.W1

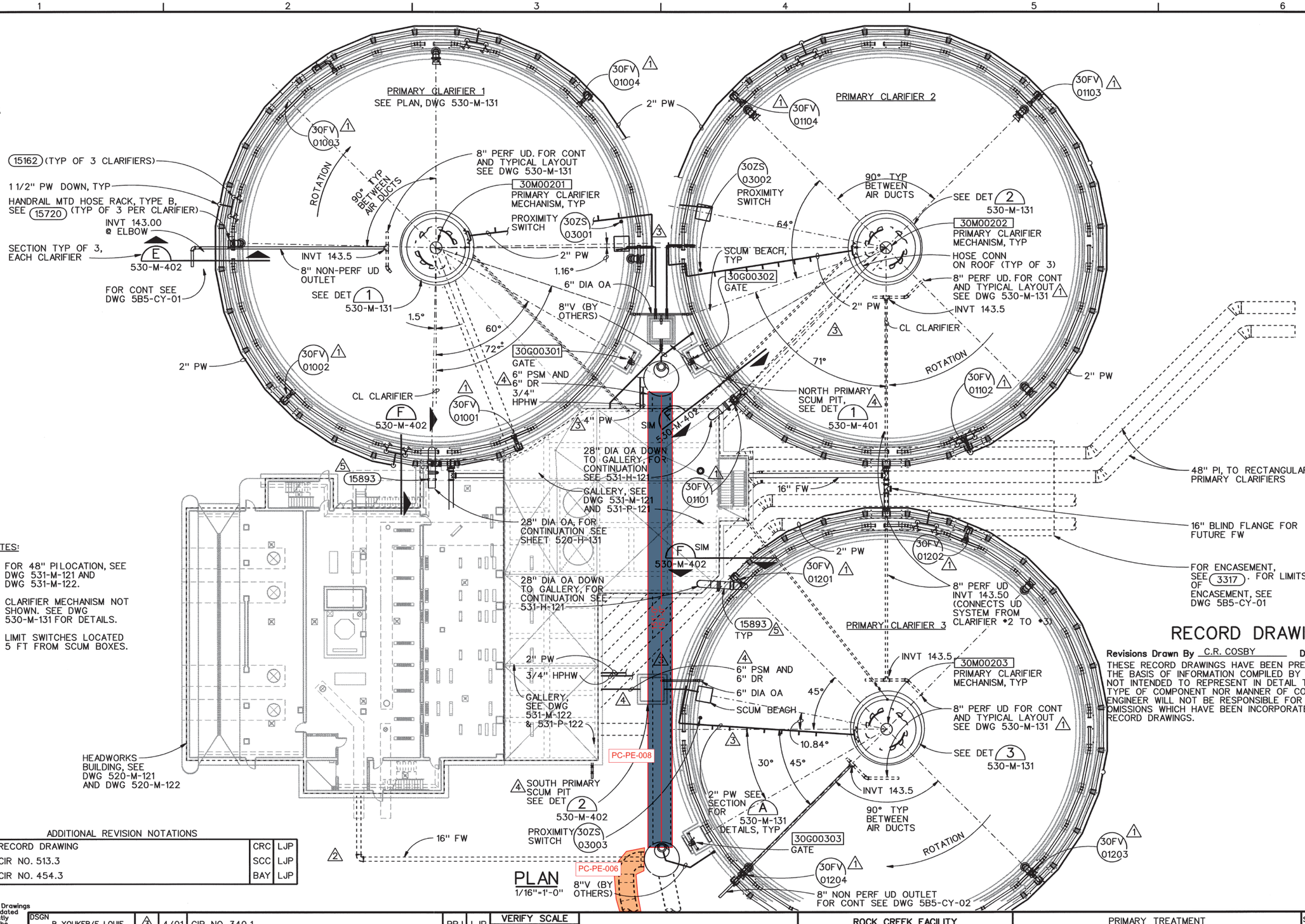

NOTES:

1. FOR 48" PI LOCATION, SEE DWG 531-M-121 AND DWG 531-M-122.
2. CLARIFIER MECHANISM NOT SHOWN. SEE DWG 530-M-131 FOR DETAILS.
3. LIMIT SWITCHES LOCATED 5 FT FROM SCUM BOXES.

RECORD DRAWINGS

Revisions Drawn By C.R. COSBY **Date** MAY 2003

THESE RECORD DRAWINGS HAVE BEEN PREPARED, IN PART, ON THE BASIS OF INFORMATION COMPILED BY OTHERS. THEY ARE NOT INTENDED TO REPRESENT IN DETAIL THE EXACT LOCATION, TYPE OF COMPONENT NOR MANNER OF CONSTRUCTION. THE ENGINEER WILL NOT BE RESPONSIBLE FOR ANY ERRORS OR OMISSIONS WHICH HAVE BEEN INCORPORATED INTO THE RECORD DRAWINGS.

ADDITIONAL REVISION NOTATIONS

	5/03	RECORD DRAWING	CRC	LJP
5	11/02	CIR NO. 513.3	SCC	LJP
4	5/02	CIR NO. 454.3	BAY	LJP

3	4/01	CIR NO. 340.1	BRJ	LJP	
2	12/99	CIR NO. 026	BAY	LJP	
1	8/99	ADDENDUM NO. 2	AGO	BAY	
NO.	DATE	REVISION	BY	APVD	

DSGN B YOUKER/E LOUIE
DR KL McCOY
CHK K ERICKSON
APVD J GOETZ

The Contract Document Drawings are printed documents dated July, 1999, as subsequently amended, which define the scope, extent, and character of the work. The original document drawing was sealed & signed by Robert M. Bracken, State of Oregon, P.E., No. 9299, dated July 22, 1977.

VERIFY SCALE
BAR IS ONE INCH ON ORIGINAL DRAWING.
0 1"
IF NOT ONE INCH ON THIS SHEET, ADJUST SCALES ACCORDINGLY.

CH2MHILL

ROCK CREEK FACILITY
EXPANSION - PHASE 5
PACKAGE B
UNIFIED SEWERAGE AGENCY
WASHINGTON COUNTY, OREGON

PRIMARY TREATMENT
MECHANICAL
PRIMARY CLARIFIERS
OVERALL PLAN

SHEET	310
DWG	530-M-121
DATE	JULY 1999
PROJ	146190

r530m141.dlv PLOT DATE: 03-JUN-2004 PLOT TIME: 13:36:26

r5=Border4.hdr 1=21, 23=45, 48, 50=60, 63=63
r5=530mp20.mst 1, 3=4, 7=16, 18=19, 21=34, 38=61
r5=530ag30.mst 1=63
r5=5120dg20.mst 1=6, 8=63
r5=530mp20.mst 16, 8=51, 53=62
r5=530-cor-duct.hln 1=61, 63=63

REUSE OF DOCUMENTS: THIS DOCUMENT, AND THE IDEAS AND DESIGNS INCORPORATED HEREIN, AS AN INSTRUMENT OF PROFESSIONAL SERVICE, IS THE PROPERTY OF CH2M HILL AND IS NOT TO BE USED, WHOLE OR IN PART, FOR ANY OTHER PROJECT WITHOUT THE WRITTEN AUTHORIZATION OF CH2M HILL. © CH2M HILL

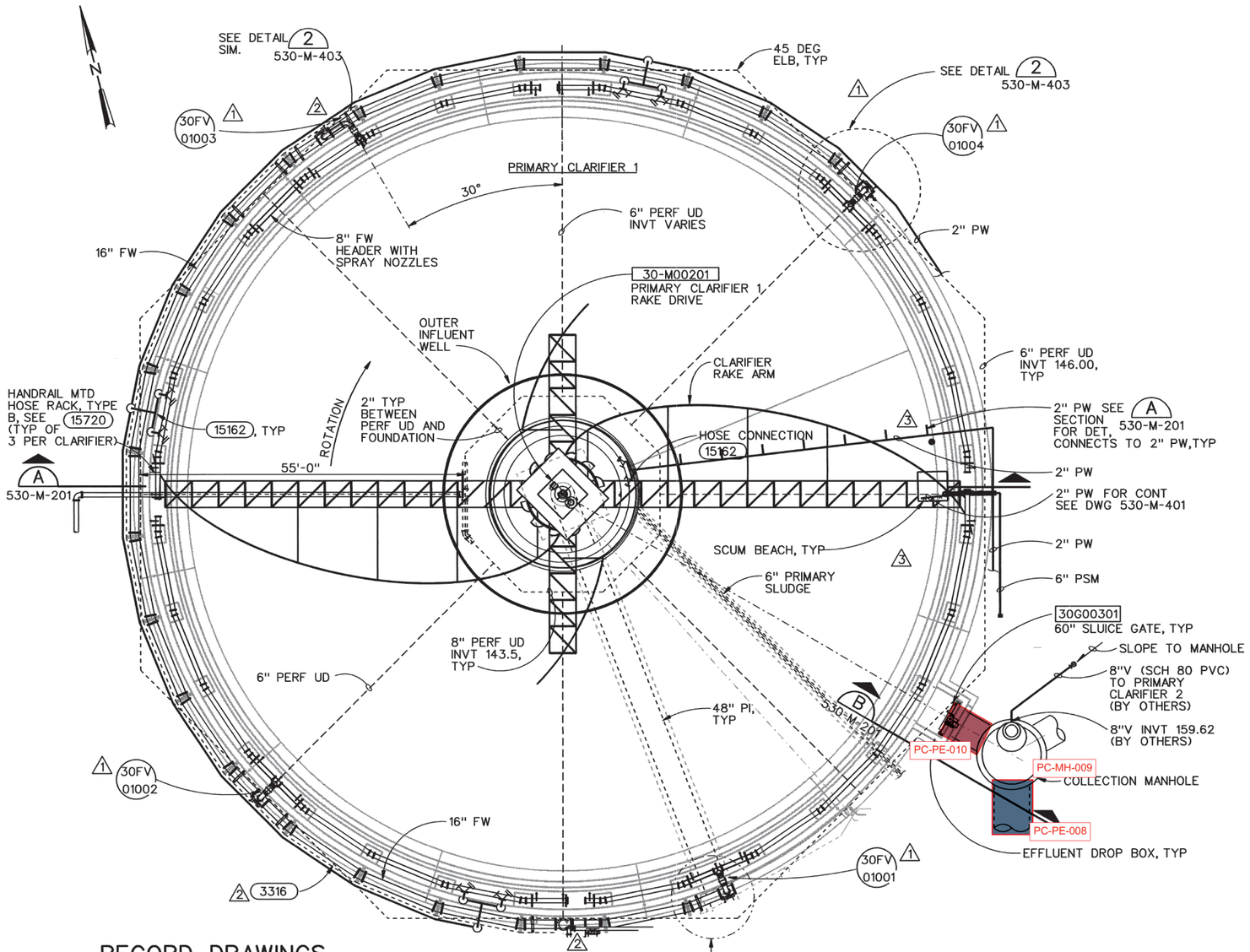

PLAN
3/32"=1'-0"

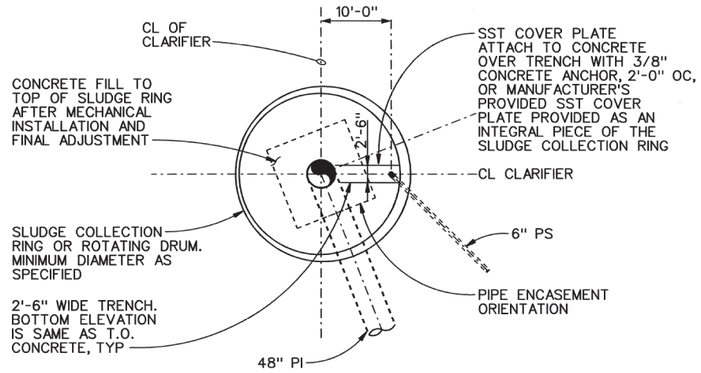

CLARIFIER 1 CENTER DETAIL 1
3/32"=1'-0" 530-M-121

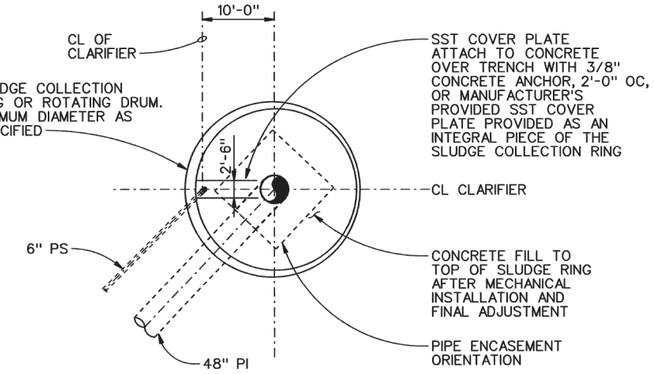

CLARIFIER 2 CENTER DETAIL 2
3/32"=1'-0" 530-M-121

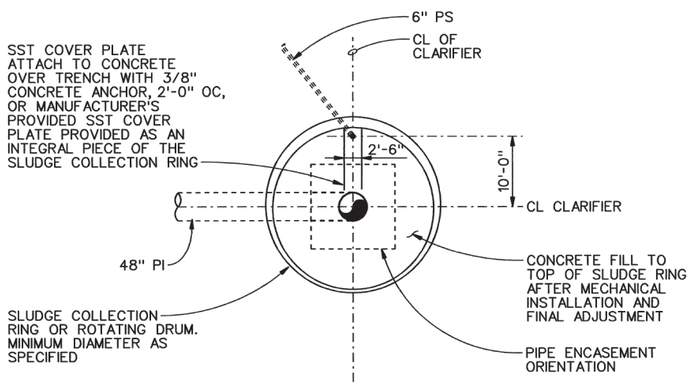

CLARIFIER 3 CENTER DETAIL 3
3/32"=1'-0" 530-M-121

RECORD DRAWINGS

Revisions Drawn By C.R. COSBY **Date** NOV. 2003

THESE RECORD DRAWINGS HAVE BEEN PREPARED, IN PART, ON THE BASIS OF INFORMATION COMPILED BY OTHERS. THEY ARE NOT INTENDED TO REPRESENT IN DETAIL THE EXACT LOCATION, TYPE OF COMPONENT NOR MANNER OF CONSTRUCTION. THE ENGINEER WILL NOT BE RESPONSIBLE FOR ANY ERRORS OR OMISSIONS WHICH HAVE BEEN INCORPORATED INTO THE RECORD DRAWINGS.

NOTE:
1. THIS PLAN IS FOR CLARIFIER 1. CLARIFIERS 2 AND 3 ARE SIMILAR. SEE DRAWING 530-M-121 FOR SPECIFIC LOCATIONS.

ADDITIONAL REVISION NOTATIONS

11/03	RECORD DRAWING	CRC	LJP	

NO.	DATE	REVISION	BY	APVD
3	4/01	CIR NO. 340.1	AGO	BAY
2	3/01	CIR NO. 365	AGO	BAY
1	8/99	ADDENDUM NO. 2	AGO	BAY

DSGN B YOUKER/E LOUIE
DR KL McCOY
CHK K ERICKSON
APVD J GOETZ

VERIFY SCALE
BAR IS ONE INCH ON ORIGINAL DRAWING. 0 1"
IF NOT ONE INCH ON THIS SHEET, ADJUST SCALES ACCORDINGLY.

The Contract Document Drawings are printed documents dated July. 1999, as subsequently amended, which define the scope, extent, and character of the work. The original document drawing was sealed & signed by Robert M. Bracken, State of Oregon, P.E. No. 9299, dated July 22, 1977.

CH2MHILL

ROCK CREEK FACILITY
EXPANSION - PHASE 5
PACKAGE B
UNIFIED SEWERAGE AGENCY
WASHINGTON COUNTY, OREGON

PRIMARY TREATMENT
MECHANICAL
PRIMARY CLARIFIER
PARTIAL PLAN

SHEET	311
DWG	530-M-131
DATE	JULY 1999
PROJ	146190

r530m142.dlv PLOT DATE: 03-JUN-2004 PLOT TIME: 13:36:44

r30border4.bdr 1-21, 23-45, 47-60, 63-63
r5r530mp20.mst 1, 3-60, 63-63
r5r530ep20.mst 1-62 1-63
r5r530tm30.mst 30 R5r530MP20.MST

REUSE OF DOCUMENTS: THIS DOCUMENT, AND THE IDEAS AND DESIGNS INCORPORATED HEREIN, AS AN INSTRUMENT OF PROFESSIONAL SERVICE, IS THE PROPERTY OF CH2M HILL AND IS NOT TO BE USED, WHOLE OR IN PART, FOR ANY OTHER PROJECT WITHOUT THE WRITTEN AUTHORIZATION OF CH2M HILL. © CH2M HILL

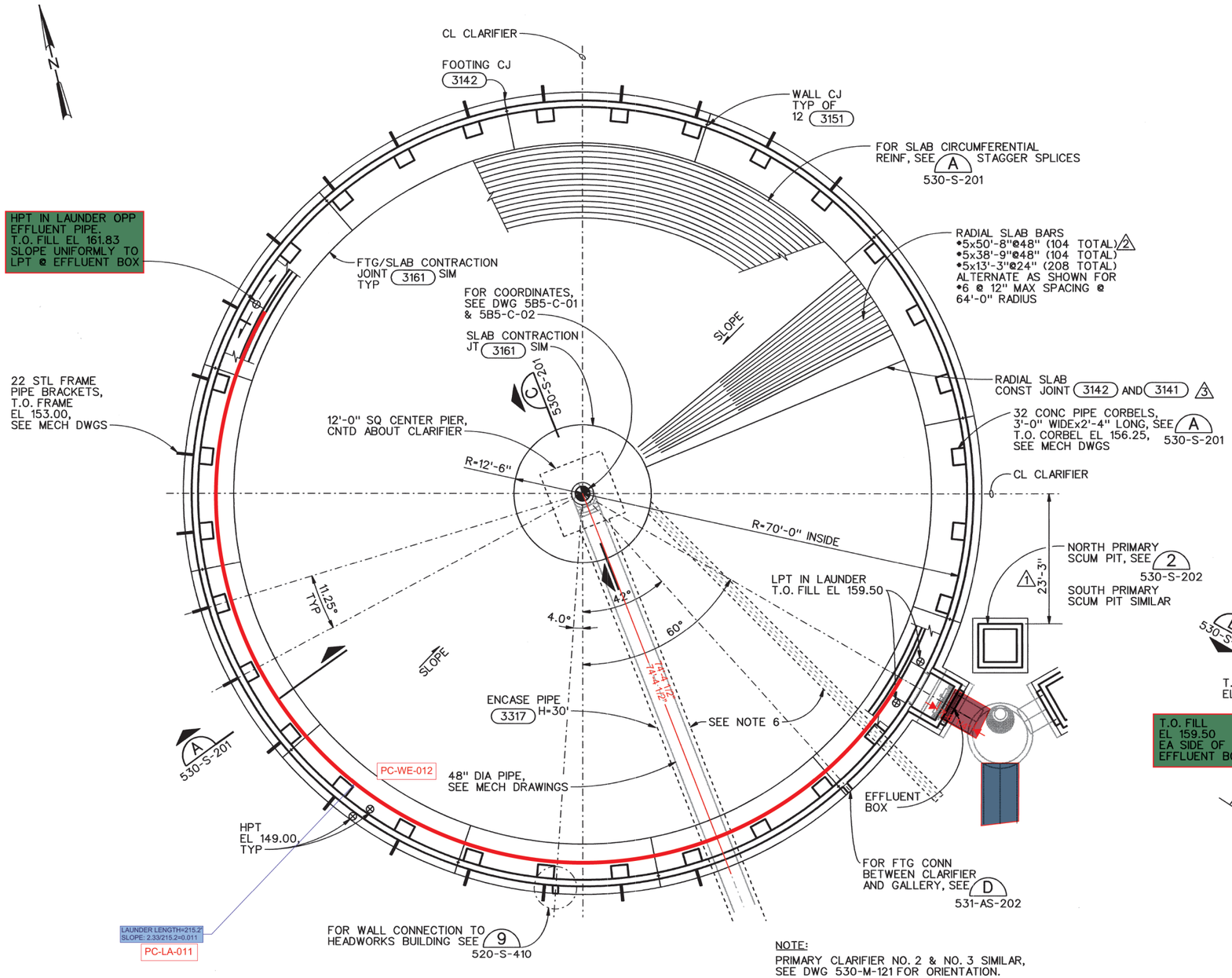

NOTE:
PRIMARY CLARIFIER NO. 2 & NO. 3 SIMILAR,
SEE DWG 530-M-121 FOR ORIENTATION.

FOUNDATION PLAN - PRIMARY CLARIFIER NO. 1
3/32"=1'-0"

NOTES:

1. POUR BOTTOM SLAB IN ONE CONTINUOUS, MONOLITHIC POUR.
2. START SLAB POUR AT RADIAL CONSTRUCTION JOINT. BULKHEAD AND CONTINUE AROUND CENTER OF CLARIFIER KEEPING FRESH EDGE OF CONCRETE CONCRETE USING RADIAL SCREED. REMOVE BULKHEAD AND MATCH UP WITH START OF POUR.
3. POUR FOOTING AND WALL IN 12 EQUAL SEGMENTS EACH WITH VERTICAL CONSTRUCTION JOINTS. ALTERNATE CONCRETE POURS TO ALLOW 14 DAYS BETWEEN ADJACENT POURS. FOOTING, WALL, AND LAUNDER CONSTRUCTION JOINTS NEED NOT BE ALIGNED.
4. FOR SUGGESTED CONSTRUCTION SEQUENCE, SEE DWG 530-S-203.
5. WATER LEAKAGE TEST ELEVATION = 164.50
6. FOR ORIENTATION OF PIPES, SEE DRAWING 530-M-121 AND 530-M-131.

RECORD DRAWINGS

Revisions Drawn By C.R. COSBY **Date** MAY 2003

THESE RECORD DRAWINGS HAVE BEEN PREPARED, IN PART, ON THE BASIS OF INFORMATION COMPILED BY OTHERS. THEY ARE NOT INTENDED TO REPRESENT IN DETAIL THE EXACT LOCATION, TYPE OF COMPONENT NOR MANNER OF CONSTRUCTION. THE ENGINEER WILL NOT BE RESPONSIBLE FOR ANY ERRORS OR OMISSIONS WHICH HAVE BEEN INCORPORATED INTO THE RECORD DRAWINGS.

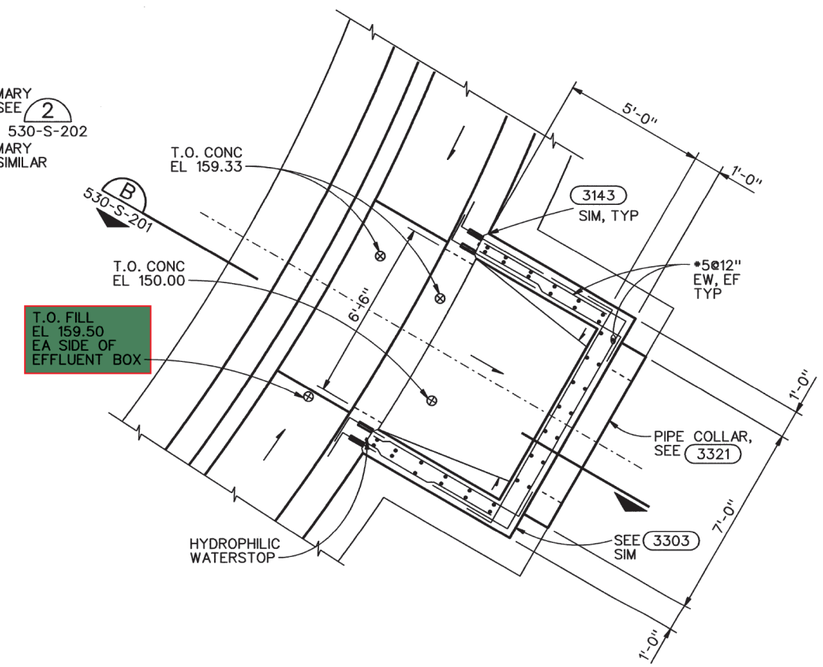

EFFLUENT BOX PLAN
3/8"=1'-0"

ADDITIONAL REVISION NOTATIONS

	5/03	RECORD DRAWING	CRC	LJP

NO.	DATE	REVISION	BY	APVD
3	4/02	CIR NO. 605	TGB	LJP
2	4/02	CIR NO. 597	TGB	LJP
1	1/02	CIR NO. 540	JAN	LJP

The Contract Document Drawings are printed documents dated July 1999, as subsequently amended, which define the scope, extent, and character of the work. The original document drawing was sealed & signed by Alex L. Firth, State of Oregon, P. E. No. 15977, dated July 21, 1992.

DSGN DA JESSEP
DR EJ PUIG
CHK SM FREY
APVD J GOETZ

VERIFY SCALE
BAR IS ONE INCH ON ORIGINAL DRAWING.
0 1"
IF NOT ONE INCH ON THIS SHEET, ADJUST SCALES ACCORDINGLY.

CH2MHILL

ROCK CREEK FACILITY
EXPANSION - PHASE 5
PACKAGE B
UNIFIED SEWERAGE AGENCY
WASHINGTON COUNTY, OREGON

PRIMARY TREATMENT
STRUCTURAL
PRIMARY CLARIFIER
FOUNDATION PLAN

SHEET	305
DWG	530-S-121
DATE	JULY 1999
PROJ	146190

REUSE OF DOCUMENTS: THIS DOCUMENT, AND THE IDEAS AND DESIGNS INCORPORATED HEREIN, AS AN INSTRUMENT OF PROFESSIONAL SERVICE, IS THE PROPERTY OF CH2M HILL AND IS NOT TO BE USED, WHOLE OR IN PART, FOR ANY OTHER PROJECT WITHOUT THE WRITTEN AUTHORIZATION OF CH2M HILL. © CH2M HILL

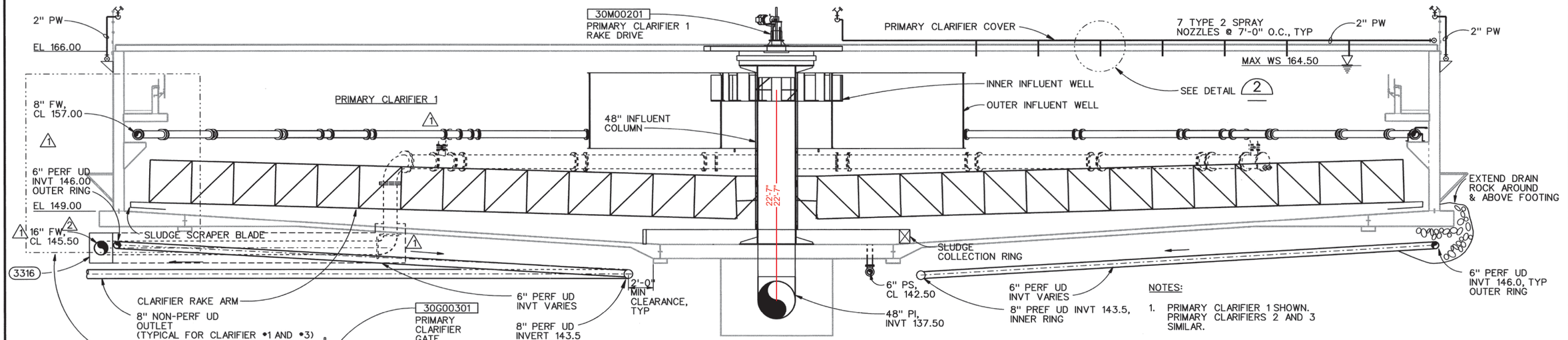

SECTION A
3/16"=1'-0" 530-M-131

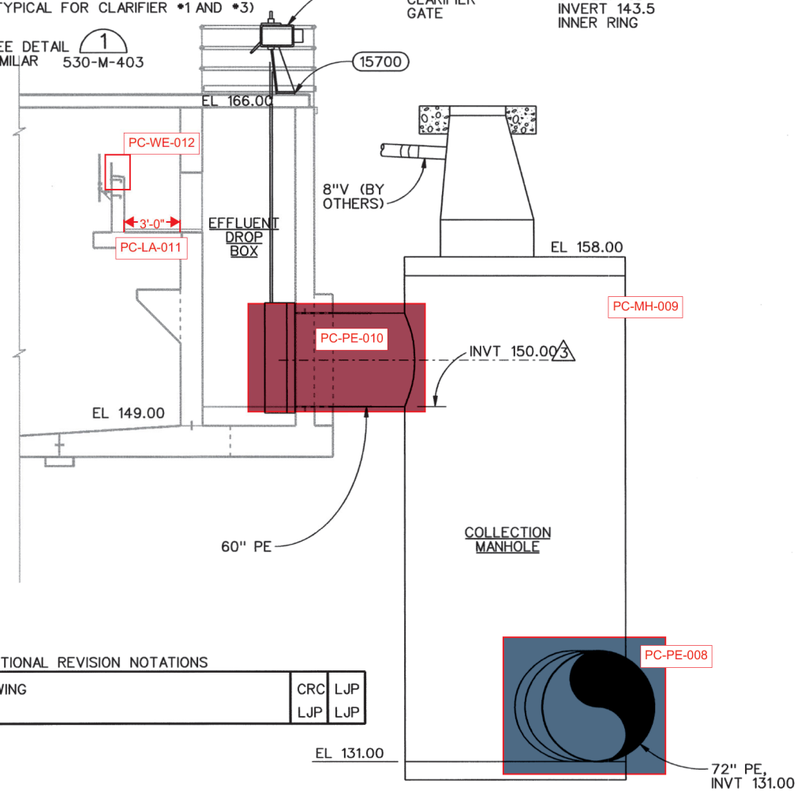

SECTION B
1/4"=1'-0" 530-M-131

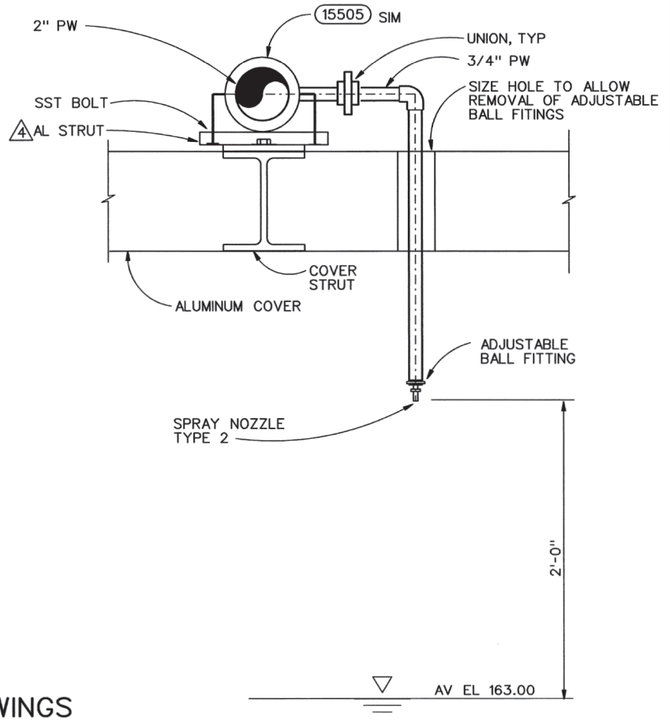

DETAIL 2
NTS 520-M-201

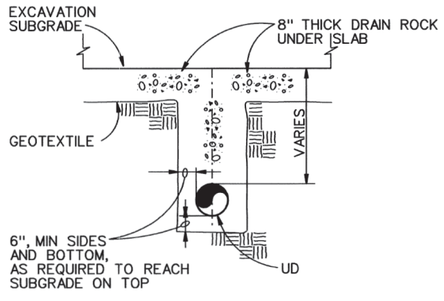

UNDERDRAIN DETAIL 1
NTS 520-M-201

ADDITIONAL REVISION NOTATIONS

4	11/03	RECORD DRAWING	CRC	LJP
	9/02	CIR NO. 666	LJP	LJP

RECORD DRAWINGS

Revisions Drawn By C.R. COSBY **Date** NOV 2003

THESE RECORD DRAWINGS HAVE BEEN PREPARED, IN PART, ON THE BASIS OF INFORMATION COMPILED BY OTHERS. THEY ARE NOT INTENDED TO REPRESENT IN DETAIL THE EXACT LOCATION, TYPE OF COMPONENT NOR MANNER OF CONSTRUCTION. THE ENGINEER WILL NOT BE RESPONSIBLE FOR ANY ERRORS OR OMISSIONS WHICH HAVE BEEN INCORPORATED INTO THE RECORD DRAWINGS.

The Contract Document Drawings are printed documents dated July 1999, as subsequently amended, which define the scope, extent, and character of the work. The original document drawing was sealed & signed by Robert M. Bracken, State of Oregon, P. E. No. 9299, dated July 22, 1977.

DSGN	E LOUIE/B YOUKER	3	6/01	CIR NO. 417	LJP	LJP
DR	KL McCOY	2	5/01	CIR NO. 403	LJP	LJP
CHK	K ERICKSON	1	3/01	CIR NO. 365	BRJ	LJP
APVD	J GOETZ	NO.	DATE	REVISION	BY	APVD

VERIFY SCALE
BAR IS ONE INCH ON ORIGINAL DRAWING.
0 1"
IF NOT ONE INCH ON THIS SHEET, ADJUST SCALES ACCORDINGLY.

CH2MHILL

ROCK CREEK FACILITY
EXPANSION - PHASE 5
PACKAGE B

UNIFIED SEWERAGE AGENCY
WASHINGTON COUNTY, OREGON

PRIMARY TREATMENT
MECHANICAL
PRIMARY CLARIFIERS
SECTIONS

SHEET	312
DWG	530-M-201
DATE	JULY 1999
PROJ	146190

//CVONT1/prj/unified sewerage agency/rock creek phase 5/CAD/drawings/r530m201.dlv PLOT DATE: 03-JUN-2004 PLOT TIME: 13:37:00

REUSE OF DOCUMENTS: THIS DOCUMENT, AND THE IDEAS AND DESIGNS INCORPORATED HEREIN, AS AN INSTRUMENT OF PROFESSIONAL SERVICE, IS THE PROPERTY OF CH2M HILL AND IS NOT TO BE USED, WHOLE OR IN PART, FOR ANY OTHER PROJECT WITHOUT THE WRITTEN AUTHORIZATION OF CH2M HILL. © CH2M HILL

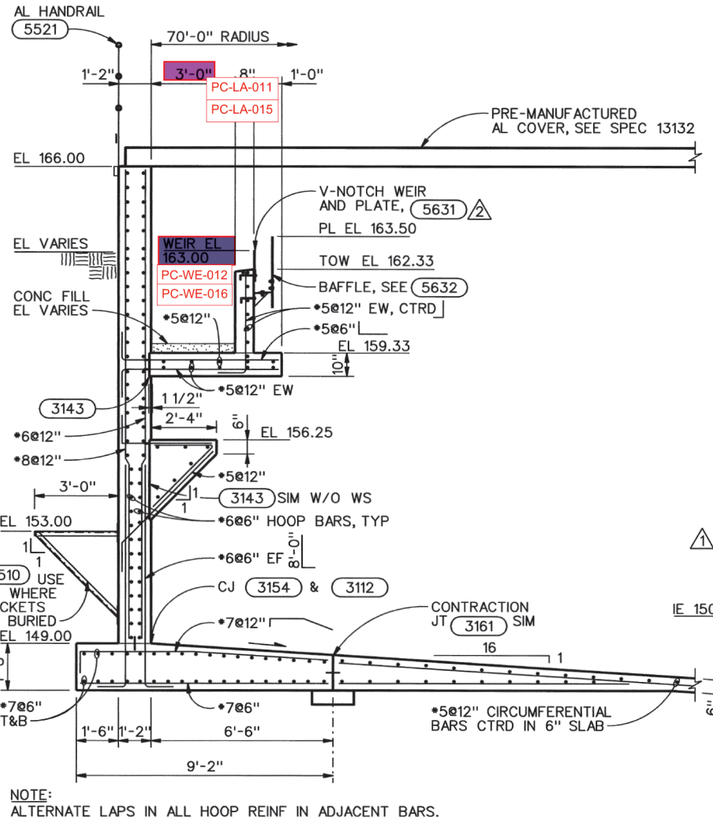

NOTE:
ALTERNATE LAPS IN ALL HOOP REINF IN ADJACENT BARS.

SECTION A
3/8"=1'-0" 530-S-121

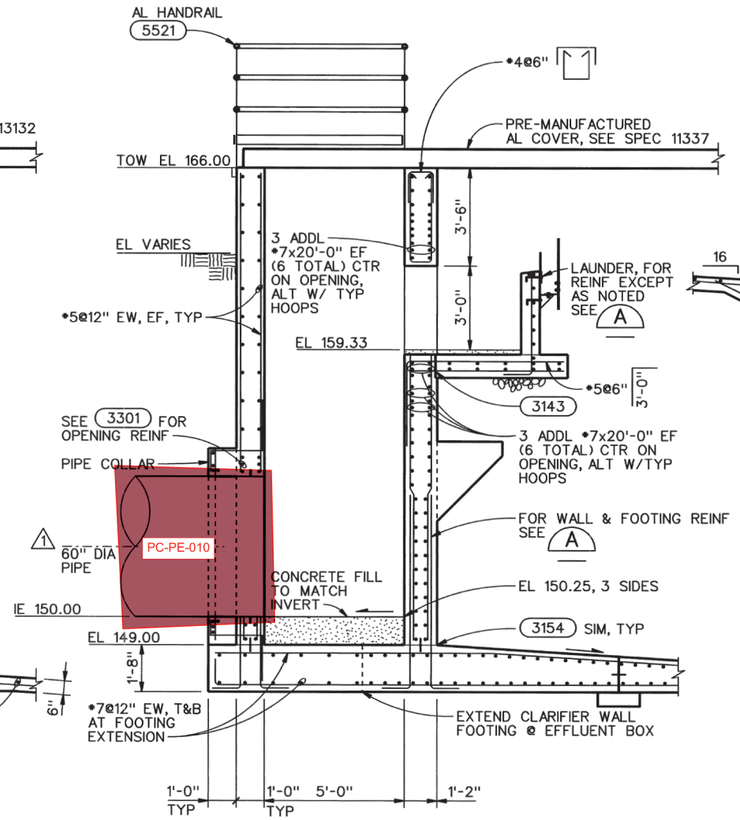

SECTION B
3/8"=1'-0" 530-S-121

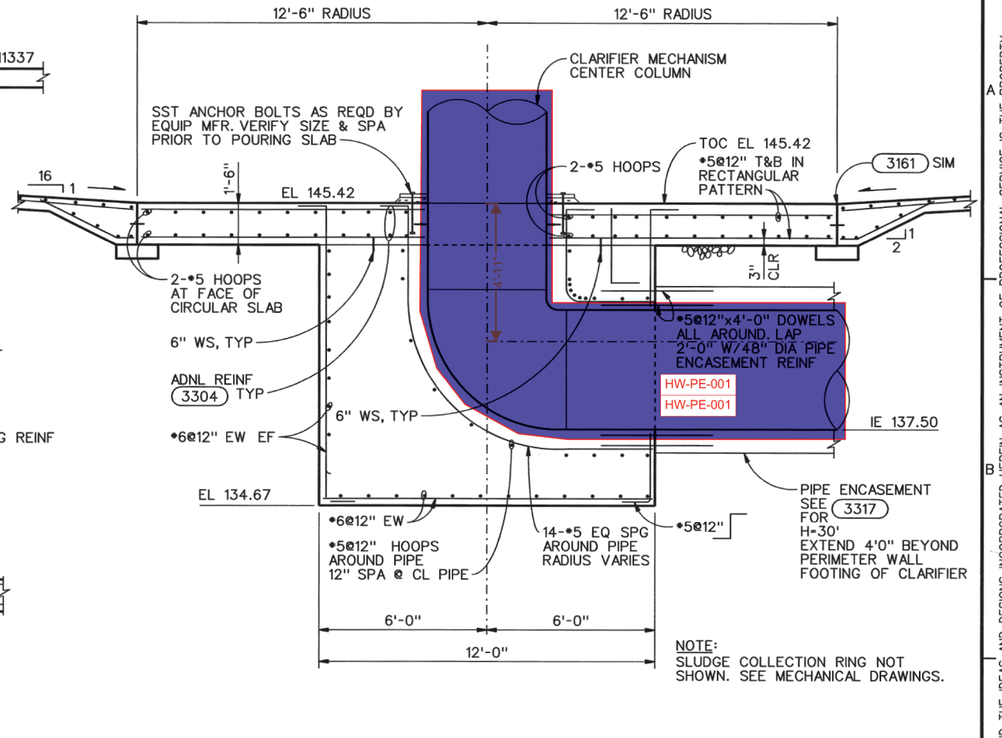

NOTE:
SLUDGE COLLECTION RING NOT
SHOWN. SEE MECHANICAL DRAWINGS.

SECTION C
3/8"=1'-0" 530-S-121

RECORD DRAWINGS

Revisions Drawn By C.R. COSBY **Date** MAY 2003

THESE RECORD DRAWINGS HAVE BEEN PREPARED, IN PART, ON THE BASIS OF INFORMATION COMPILED BY OTHERS. THEY ARE NOT INTENDED TO REPRESENT IN DETAIL THE EXACT LOCATION, TYPE OF COMPONENT NOR MANNER OF CONSTRUCTION. THE ENGINEER WILL NOT BE RESPONSIBLE FOR ANY ERRORS OR OMISSIONS WHICH HAVE BEEN INCORPORATED INTO THE RECORD DRAWINGS.

REUSE OF DOCUMENTS: THIS DOCUMENT, AND THE IDEAS AND DESIGNS INCORPORATED HEREIN, AS AN INSTRUMENT OF PROFESSIONAL SERVICE, IS THE PROPERTY OF CH2M HILL AND IS NOT TO BE USED, WHOLE OR IN PART, FOR ANY OTHER PROJECT WITHOUT THE WRITTEN AUTHORIZATION OF CH2M HILL. © CH2M HILL

The Contract Document Drawings are printed documents dated July 1999, as subsequently amended, which define the scope, extent, and character of the work. The original document drawing was sealed & signed by Alex L. Firth, State of Oregon, P. E. No. 15977, dated July 21, 1992.

DSGN	D JESSEP
DR	EJ PUIG
CHK	SM FREY
APVD	J GOETZ

NO.	DATE	REVISION	BY	APVD
	5/03	RECORD DRAWING	CRC	LJP
2	6/02	CIR NO. 638.1	PwB	LJP
1	6/01	CIR NO. 417	LJP	LJP

VERIFY SCALE
BAR IS ONE INCH ON ORIGINAL DRAWING.
0 1"
IF NOT ONE INCH ON THIS SHEET, ADJUST SCALES ACCORDINGLY.

CH2MHILL

ROCK CREEK FACILITY
EXPANSION - PHASE 5
PACKAGE B

UNIFIED SEWERAGE AGENCY
WASHINGTON COUNTY, OREGON

PRIMARY TREATMENT
STRUCTURAL
PRIMARY CLARIFIER
SECTIONS

SHEET	307
DWG	530-S-201
DATE	JULY 1999
PROJ	146190

//CVONT1/prj/Unified Sewerage Agency/ROCK CREEK PHASE 5/design/CAD/drawings/r530s201.dlv PLOT DATE: 03-JUN-2004 PLOT TIME: 12:10:10

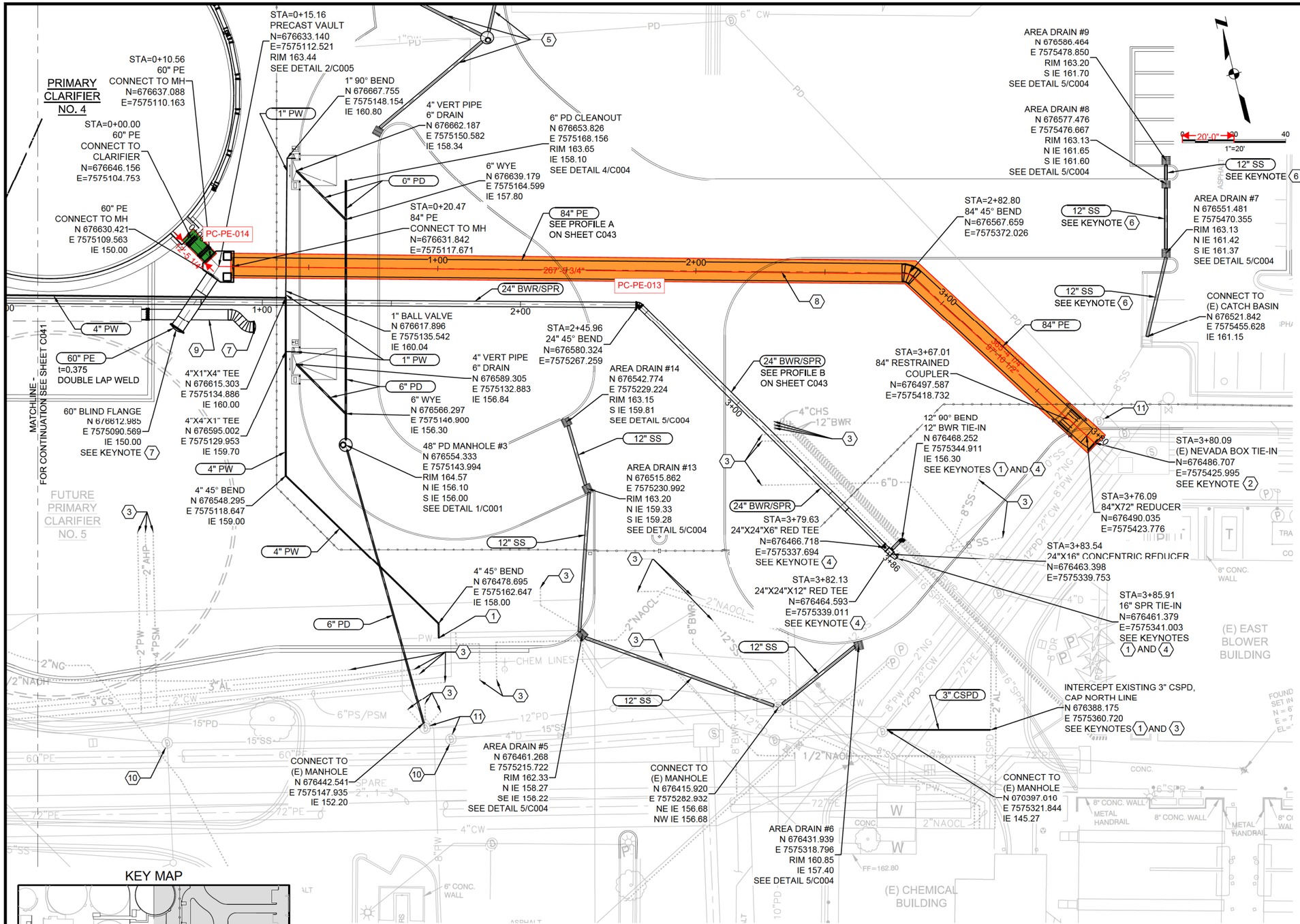

GENERAL NOTES

1. WHERE VALVES ARE BURIED, PROVIDE VALVE BOX AS SHOWN ON DETAIL 3/C001.
2. SEE DETAIL 2/C001 FOR TRENCH EXCAVATION REQUIREMENTS.
3. SEE SHEET M001 FOR GENERAL PIPING REQUIREMENTS.
4. PROVIDE CONCRETE SUPPORTS AT PIPE CROSSINGS AS SHOWN ON DETAIL 4/C001.
5. PROVIDE PIPE DETECTION RIBBON AS SHOWN ON DETAIL 1/C007.

SHEET KEYNOTES

1. CONNECT TO EXISTING. FIELD VERIFY LOCATION, EXISTING PIPE SIZE, BOTTOM OF PIPE, AND DEPTH.
2. USE 84" X 72" REDUCER TO CONNECT TO EXISTING 72" STUB-OUT AT NEVADA BOX. SEE DETAIL 1/C006.
3. INSTALL PERMANENT CAP OR PLUG AND ABANDON EXISTING PIPING. SEE SPECIFICATION 02050 FOR DETAILS.
4. 12" BWR AND 16" SPR TIE-IN TO 24" COMBINED BWR/SPR LINE, SEE DETAIL 2/C006.
5. SEE DETAIL 5/C006 FOR SANITARY STORM PIPING ON NORTH SIDE OF ENTRY ROAD.
6. PIPES SHALL BE DUCTILE IRON AND SHALL MEET DRAIN (PROCESS) PIPE REQUIREMENTS ON G005.
7. INSTALL THRUST BLOCK PER DETAIL 4/C007.
8. 2-WIRE AT GRADE TEST STATION WITH TWO 32 LB PACKAGED MAGNESIUM ANODES.
9. 2-WIRE AT GRADE TEST STATION WITH ONE 17 LB PACKAGED MAGNESIUM ANODE. BOND 38" PI TO BOTH 60" PE SHORT SEGMENTS.
10. POTENTIAL DEWATERING DISCHARGE LOCATION, CONTRACTOR'S OPTION. DISCHARGE INTO EXISTING STORMWATER PIPING NETWORK. MAINTAIN ROADWAY ACCESS.
11. REMOVE MANHOLE CONE AND FIRST RISER SECTION. INSTALL NEW RISER SECTION AND CONE WITH 24" FRAME AND COVER FLUSH WITH GRADE. ADHERE TO MANHOLE REQUIREMENTS IN DETAIL 1/C001.

KEY MAP

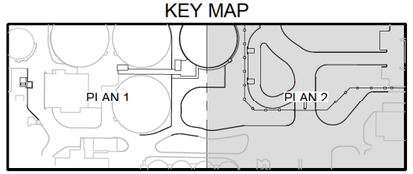

CONFORMED DRAWING

THIS DRAWING IS A CONFORMED DRAWING AND IS NOT A PART OF THE CONTRACT DOCUMENTS. THIS DRAWING IS PROVIDED AS A COURTESY TO THE CONTRACTOR. IN THE EVENT OF A DISCREPANCY BETWEEN THE CONFORMED DRAWING AND THE CONTRACT DOCUMENTS, THE CONTRACT DOCUMENTS SHALL GOVERN. USERS OF THIS DOCUMENT IN EDITABLE ELECTRONIC FORMATS ARE CAUTIONED AGAINST USE WITHOUT FIRST DETERMINING WHETHER CHANGES MAY HAVE BEEN MADE SUBSEQUENT TO ITS PREPARATION.

YARD PIPING PLAN 2

DRN: WAS	ORIG DATE: AUGUST 2020	PROJ NAME: ROCK CREEK AWWTF PRIMARY CLARIFIER NO. 4 TREATMENT EXPANSION	SHEET TITLE: CIVIL YARD PIPING PLAN 2
DSN: JO	DWG #: C042		
CHK: CLW	CAD FILE #: 187600813-C042		
APPD: CLW	SCALE: AS NOTED		

THIS BAR IS ONE INCH WHEN DRAWING IS FULL SCALE.

REV #	DATE	DRN	APPD	DESCRIPTION

Clean Water Services
2550 SW Hillsboro Hwy. Hillsboro, Oregon 97123-9379

Kennedy Jenks

SHEET: 40 OF: 174
PLOT DATE: 5/11/23
PLC #: N/A
CWS PROJ #: 7012

DWG #: C042

REGISTERED PROFESSIONAL ENGINEER 93889PE OREGON MAR 09, 2021 JANA OTERO
ENGR STAMP: EXPIRES: 12/31/24

100% SUBMITTAL
(FOR CONFORMED DRAWINGS)

File: C:\tmsk\jce-pw\d0177830\187600813-C042.dwg TAB:C042
Plotted: 5/11/23 at 1:18pm By: WendyShane

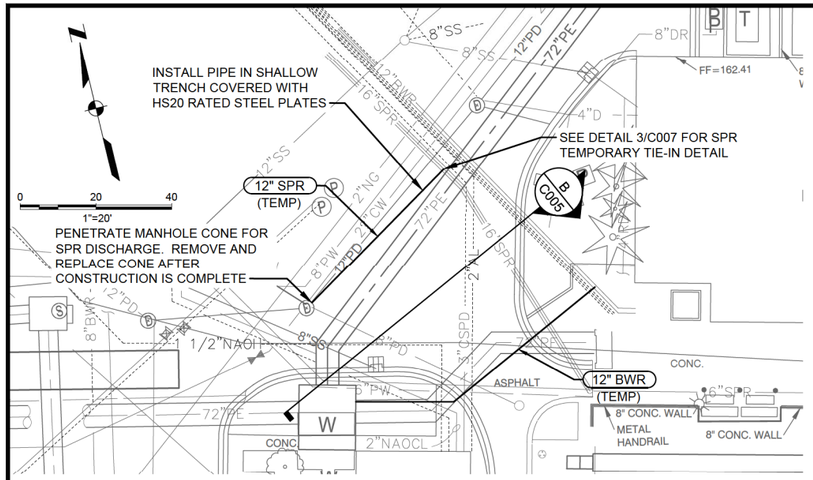

NOTES:

1. TEMPORARY PIPING SHALL BE DUCTILE IRON PIPE SIZE HDPE OR C900 PVC AT CONTRACTOR'S OPTION.
2. AFTER INSTALLATION OF PERMANENT COMBINED SPR/BWR LINE IS COMPLETE, REMOVE FITTING AND RESTORE FUNCTIONALITY OF 12" BWR AND 16" SPR PIPE. REPLACE CUT PIPE WITH NEW PIPE SPOOL AND RESTRAINED COUPLERS.

1 / C012 TEMPORARY SPR AND BWR CONNECTION
SCALE: NOTED

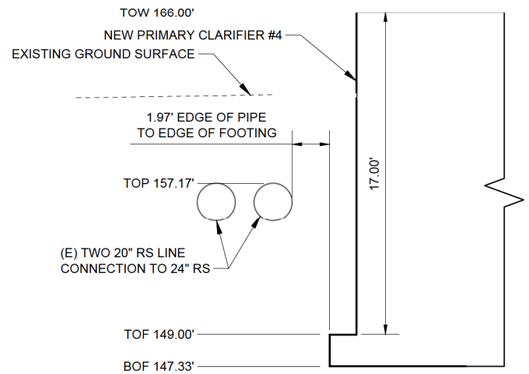

NOTES:

1. SHORING TO BE DESIGNED BY CONTRACTOR.
2. RS LINES TO BE PROTECTED IN PLACE.
3. CONTRACTOR TO FIELD VERIFY 20" AND 24" RS LINE LOCATIONS.
4. CONTRACTOR TO SUPPORT RS LINES AS REQUIRED.

A / C018 SECTION THRU POTHOLE #5 AND NEW CLARIFIER
SCALE: 1/4" = 1'-0"

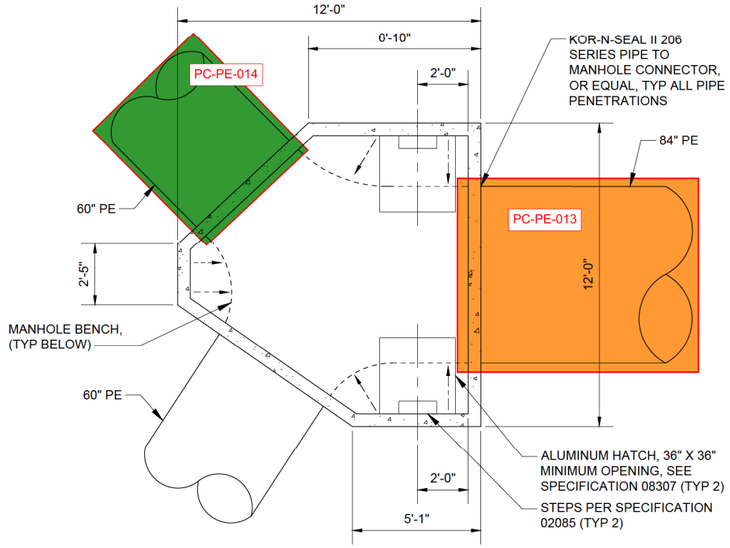

NOTES:

1. CONSTRUCT FLOWLINES AND BENCH PER MANHOLE DETAIL 1/C001.
2. CONTRACTOR TO DESIGN AND SUBMIT PRECAST VAULT. SEE SPECIFICATION 02085 FOR REQUIREMENTS.
3. SEE YARD PIPING SHEETS FOR ELEVATION REQUIREMENTS.
4. DIMENSIONS PROVIDED ARE MINIMUM DIMENSIONS.

2 / C042 PRIMARY EFFLUENT PRECAST VAULT
SCALE: 1" = 3'

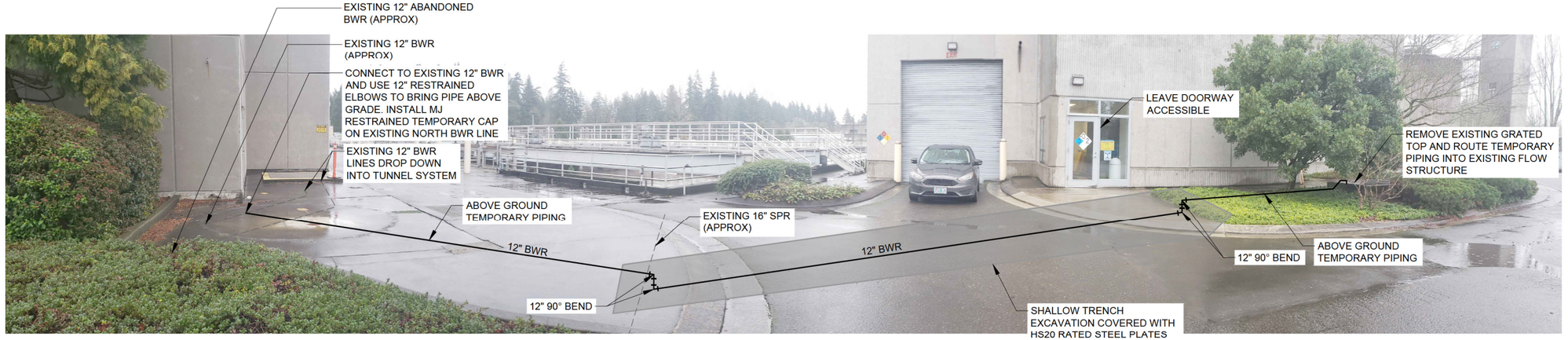

NOTES:

1. CONTRACTOR SHALL LOCATE EXISTING PIPES AND SUBMIT TEMPORARY PIPING PLAN BASED ON FIELD LOCATED PIPE LOCATIONS.
2. COORDINATE WITH OWNER PRIOR TO ANY UTILITY SHUTDOWN.
3. PROVIDE TEMPORARY PIPE SUPPORTS AS NEEDED FOR ABOVE GRADE PIPING.
4. BACKFILL ACCESS PITS IN SIDEWALK WITH 3/4" CRUSHED ROCK.
5. RESTORE SITE TO PRE-CONSTRUCTION CONDITION AFTER WORK IS COMPLETE. SEE SHEET C002 FOR PAVEMENT, SIDEWALK, AND CURB DETAILS. FINISHED GRADE ELEVATION OF COMPLETED WORK WILL MATCH PRE-DEMOLITION ELEVATIONS AND SLOPES. NEW WORK WILL JOIN ADJACENT EXISTING ELEVATION OF ITEMS NOT REMOVED WITH A SMOOTH AND FLUSH JOINT.

B / C005 SECTION OF TEMPORARY SPR AND BWR CONNECTION
SCALE: NO SCALE

CONFORMED DRAWING

THIS DRAWING IS A CONFORMED DRAWING AND IS NOT A PART OF THE CONTRACT DOCUMENTS. THIS DRAWING IS PROVIDED AS A COURTESY TO THE CONTRACTOR. IN THE EVENT OF A DISCREPANCY BETWEEN THE CONFORMED DRAWING AND THE CONTRACT DOCUMENTS, THE CONTRACT DOCUMENTS SHALL GOVERN. USERS OF THIS DOCUMENT IN EDITABLE ELECTRONIC FORMATS ARE CAUTIONED AGAINST USE WITHOUT FIRST DETERMINING WHETHER CHANGES MAY HAVE BEEN MADE SUBSEQUENT TO ITS PREPARATION.

DRN: WAS	ORIG DATE: AUGUST 2020	THIS BAR IS ONE INCH WHEN DRAWING IS FULL SCALE.	
DSN: JO	DWG #: C005		
CHK: CLW	CAD FILE #: 187600813-C005		
APPD: CLW	SCALE: AS NOTED		

REV #	DATE	DRN	APPD	DESCRIPTION

Clean Water Services
2550 SW Hillsboro Hwy. Hillsboro, Oregon 97123-9379

PROJ NAME: ROCK CREEK AWWTF PRIMARY CLARIFIER NO. 4 TREATMENT EXPANSION
Kennedy Jenks

SHEET TITLE: CIVIL DETAILS 1

SHEET: 16 OF: 174
PLOT DATE: 5/10/23
PLC #: N/A
CWS PROJ #: 7012

DWG #: C005

REGISTERED PROFESSIONAL ENGINEER 76443PE OREGON JAN 08, 2009 MICHAEL DAVID HUMM
ENGR STAMP: EXPIRES: 6/30/23

100% SUBMITTAL
(FOR CONFORMED DRAWINGS)

File: C:\bimelkice-pw\d0177830\187600813-C005.dwg TAB:C005
Plotted: 5/10/23 at 2:09pm By: WendyShane

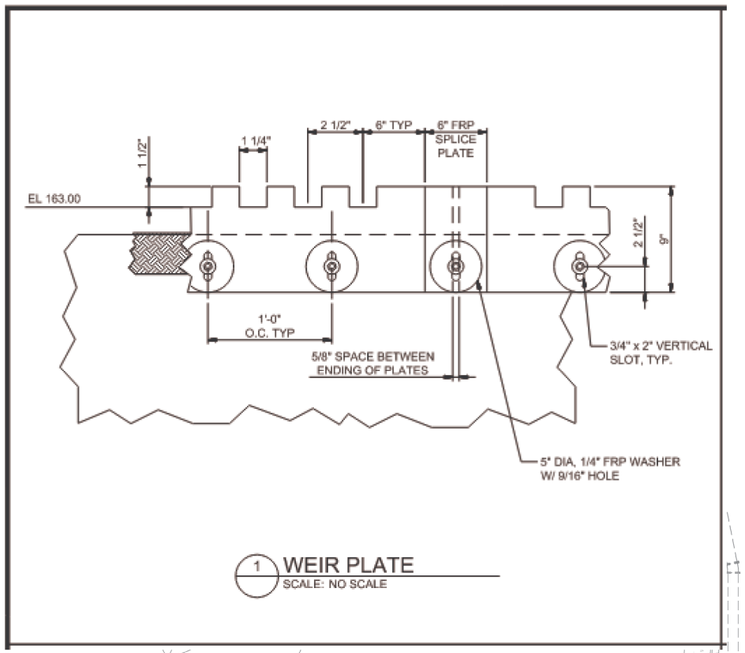

1 WEIR PLATE
SCALE: NO SCALE

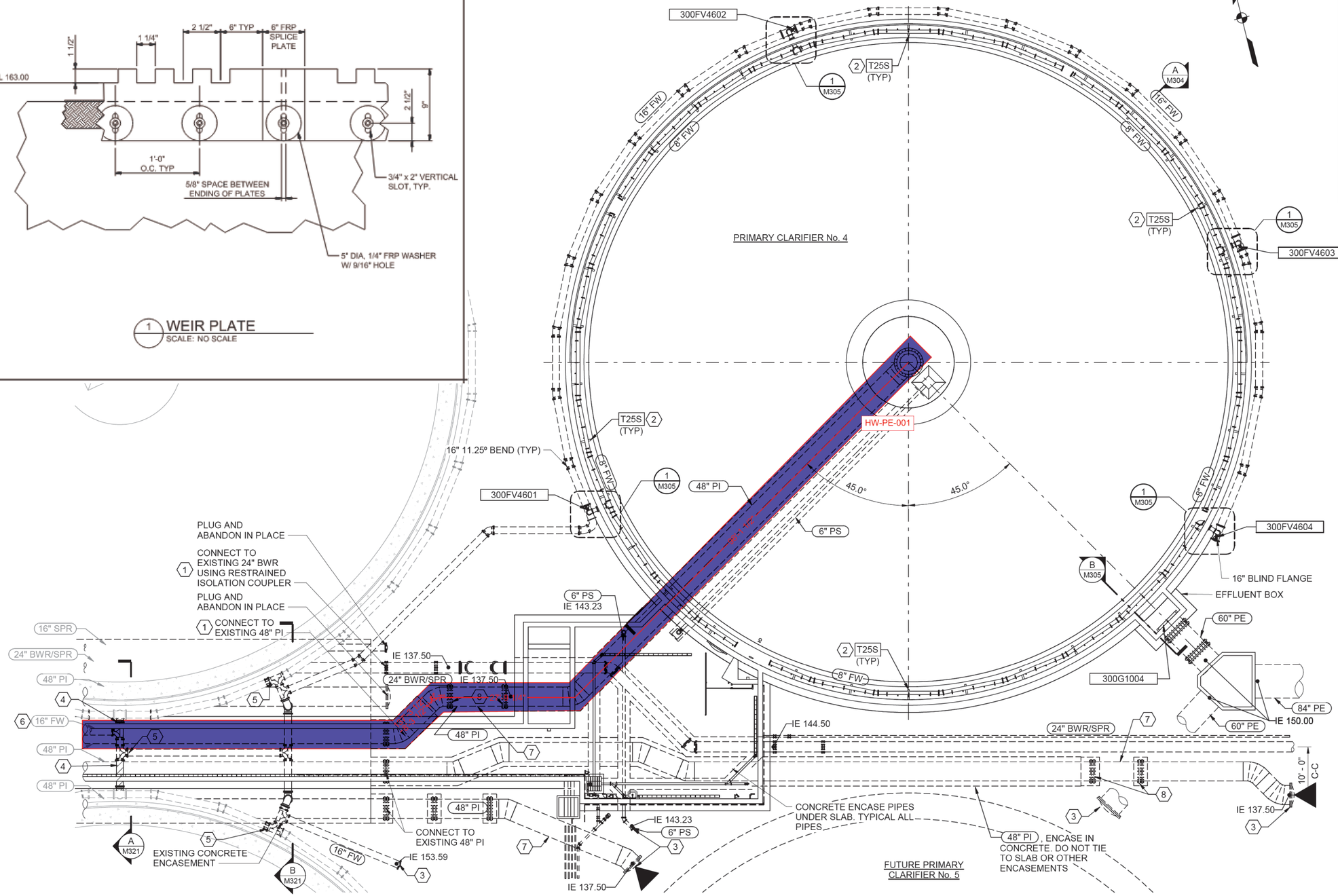

SHEET KEYNOTES

1. EXISTING PIPE MATERIAL IS CONCRETE CYLINDER PIPE OR WELDED STEEL (CEMENT LINED AND COATED). PROVIDE COUPLER TO CONNECT NEW PIPING TO EXISTING. ENCASE IN CONCRETE WHERE SHOWN.
2. SPACE PIPE SUPPORTS MAX OF 12-FEET O.C.
3. CAP AND INSTALL THRUST BLOCK PER DETAIL 4/C007 FOR FUTURE CONNECTIONS.
4. REMOVE EXISTING 16" FW CONNECTION AND BLIND FLANGE.
5. CONNECT NEW 16" FW TO EXISTING 16" FW.
6. CONCRETE ENCASE NEW AND EXISTING 16" FW BENEATH THE UTILITY CORRIDOR.
7. 2 WIRE AT GRADE TEST STATION WITH ONE 17 POUND PACKAGED MAGNESIUM ANODE.
8. 48" RESTRAINED COUPLERS TO BE INSTALLED WITH FOUR 1-INCH DIAMETER TIE BOLTS.

CONFORMED DRAWING

THIS DRAWING IS A CONFORMED DRAWING AND IS NOT A PART OF THE CONTRACT DOCUMENTS. THIS DRAWING IS PROVIDED AS A COURTESY TO THE CONTRACTOR. IN THE EVENT OF A DISCREPANCY BETWEEN THE CONFORMED DRAWING AND THE CONTRACT DOCUMENTS, THE CONTRACT DOCUMENTS SHALL GOVERN. USERS OF THIS DOCUMENT IN EDITABLE ELECTRONIC FORMATS ARE CAUTIONED AGAINST USE WITHOUT FIRST DETERMINING WHETHER CHANGES MAY HAVE BEEN MADE SUBSEQUENT TO ITS PREPARATION.

REGISTERED PROFESSIONAL ENGINEER 64471PE OREGON JAN 23, 2001 CHARLES L. WRIGHT JR.
ENGR STAMP: EXPIRES: 6/30/24

DRN: KRC	ORIG DATE: NOVEMBER 2021	PROJ NAME: ROCK CREEK AWWTF PRIMARY CLARIFIER NO. 4 TREATMENT EXPANSION	SHEET TITLE: MECHANICAL PRIMARY CLARIFIER No. 4 BOTTOM PLAN
DSN: KRC	DWG #: M301		
CHK: CLW	CAD FILE #: 1876008.13-M-RC-CLAR.rvt		
APPD: CLW	SCALE: 3/32" = 1'-0"		

THIS BAR IS ONE INCH WHEN DRAWING IS FULL SCALE.

REV #	DATE	DRN	APPD	DESCRIPTION

CleanWater Services
2550 SW Hillsboro Hwy. Hillsboro, Oregon 97123-9379

Kennedy Jenks

SHEET: 109 OF: 174
PLOT DATE: 01/2023
PLC #: NA
CWS PROJ #: 7012
DWG #: M301

100% SUBMITTAL
(FOR CONFORMED DRAWINGS)

File: pw:\\kjce-pw.bentley.com:kjce-pw\Documents\Clients\Clean Water Services, County of WA\Projects\Rock Creek Primary Clarifier Final Design_1876008.13\10-Design\10.06-Drawings\Mechanical\Models\1876008.13-M-RC-CLAR.rvt
Plotted: 04/20/2023 4:06:13 PM
By: Kennedy Jenks

N

0 20 40 20'-3/4" 60
SCALE IN FEET

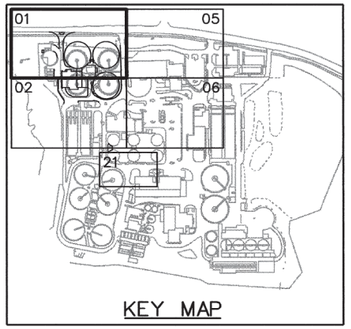

KEY MAP

ADDITIONAL REVISION NOTATIONS

	5/03	RECORD DRAWING	CRC	LJP
11	5/01	CIR NO. 262.1	TGB	LJP
10	5/02	CIR NO. 490.1	GVT	LJP
9	3/02	CIR NO. 444.2	TGB	LJP
8	8/01	CIR NO. 477	JFM	LJP
7	1/01	CIR NO. 315	TGB	LJP
6	7/01	CIR NO. 444	LJP	LJP
5	7/01	CIR NO. 442	JFM	LJP
4	2/01	CIR NO. 224	LJP	LJP

RECORD DRAWINGS

Revisions Drawn By C.R. COSBY **Date** MAY 2003

THESE RECORD DRAWINGS HAVE BEEN PREPARED, IN PART, ON THE BASIS OF INFORMATION COMPILED BY OTHERS. THEY ARE NOT INTENDED TO REPRESENT IN DETAIL THE EXACT LOCATION, TYPE OF COMPONENT NOR MANNER OF CONSTRUCTION. THE ENGINEER WILL NOT BE RESPONSIBLE FOR ANY ERRORS OR OMISSIONS WHICH HAVE BEEN INCORPORATED INTO THE RECORD DRAWINGS.

NOTES:

1. EXISTING UNDERGROUND UTILITIES OBTAINED FROM AS-BUILTS. CONTRACTOR SHALL FIELD VERIFY DEPTH AND LOCATION AT CONSTRUCTION CROSSINGS PRIOR TO EXCAVATION.
2. UNLESS OTHERWISE SHOWN, ALL PIPING SHALL HAVE A MINIMUM OF 36" COVER.
3. ALL PIPES SHALL HAVE A CONSTANT SLOPE BETWEEN INVERT ELEVATIONS UNLESS A FITTING IS SHOWN.
4. VERTICAL BENDS IN PLANT PRESSURE PIPING MAY BE REQUIRED TO AVOID CONFLICTS WITH NEW OR EXISTING UTILITIES. THESE VERTICAL BENDS ARE GENERALLY NOT SHOWN ON THE DRAWING; HOWEVER, THE CONTRACTOR SHALL PROVIDE THEM AT NO ADDITIONAL COST TO THE OWNER.
5. FOR TRENCHING, BACKFILL AND SURFACE RESTORATION, SEE (15802) AND (15803).
6. UTILITY VAULT NO. 776-LA WITH 40"x64" ACCESS DOOR - COVER 352P FOR HS-20 LOADING. CONFIRM SIZE OF VAULT WITH VALVE DIMENSIONS.
7. COORDINATE ALL YARD PIPING LOCATIONS WITH ELECTRICAL, SEE DWGS 590-E-01 THROUGH 590-E-12.
8. PROVIDE FLEXIBLE COUPLING ADAPTORS OUTSIDE OF ALL CONCRETE ENCASED PIPING (3317) AND (15601).
9. SEE SPECIFICATION 01040 FOR SEQUENCE AND CONSTRUCTION RESTRAINTS.
10. 48"x42" AND 54"x48" REDUCING ELBOWS.
11. PLACE FLANGE AT END OF PIPE BEFORE ELBOW FOR FUTURE CONNECTION.
12. ENCASE ONLY EASTERLY 54" RS PIPING, CLOSEST TO THE PRELIMINARY TREATMENT FACILITY 20.
13. INSTALL FIRE HYDRANT EARLY IN PROJECT TO MEET REQUIREMENTS OF FIRE DEPARTMENT.

A PROPERTY OF CH2M HILL. © CH2M HILL
REUSE OF DOCUMENTS: THIS DOCUMENT AND THE IDEAS AND DESIGNS INCORPORATED HEREIN, AS AN INSTRUMENT OF PROFESSIONAL SERVICE, IS THE PROPERTY OF CH2M HILL AND IS NOT TO BE USED, WHOLE OR IN PART, FOR ANY OTHER PROJECT WITHOUT THE WRITTEN AUTHORIZATION OF CH2M HILL.

The Contract Document Drawings are printed documents dated July. 1999, as subsequently amended, which define the scope, extent, and character of the work. The original document drawing was sealed & signed by William B. Wagner, State of Oregon, P.E. No. 10,642, dated July 18, 1980.

DSGN	JA NESSL
DR	LG McCALL
CHK	WB WAGNER
APVD	J GOETZ

NO.	DATE	REVISION	BY	APVD
3	11/00	CIR NO. 225	TGB	LJP
2	9/00	CIR NO. 212	JAN	LJP
1	2/00	CIR NO. 055	AGO	LJP

VERIFY SCALE
BAR IS ONE INCH ON ORIGINAL DRAWING.
0 1"
IF NOT ONE INCH ON THIS SHEET, ADJUST SCALES ACCORDINGLY.

CH2MHILL

ROCK CREEK FACILITY EXPANSION - PHASE 5
PACKAGE B
UNIFIED SEWERAGE AGENCY
WASHINGTON COUNTY, OREGON

CIVIL
YARD PIPING PLAN

SHEET	45
DWG	5B5-CY-01
DATE	JULY 1999
PROJ	146190

r5r505sep1.mst	2-6, 8, 12, 14~15, 17~19, 21~36, 50~51
r5r505sep.mst	32~36, 45, 61
r5r505cyp.mst	1, 10, 25~27, 38, 57
r5r505cyy1.mst	2-6, 8, 12, 14~15, 17~19, 21~36, 50~51
r5r505cyp.mst	5, 18~20, 47, 59~61

r5r505rev.mst	2-6, 19, 21, 28, 31, 35~36, 41~42, 45~46, 53
r5r50border.mst	1~2, 48, 60
r5r505cpp.mst	32, 34

//CVONT1/prj/unified sewerage agency/rock creek phase 5/CAD/drawings/r5b5cy01.dlv PLOT DATE: 02-JUN-2004 PLOT TIME: 09:14:22

HW HEADWORKS

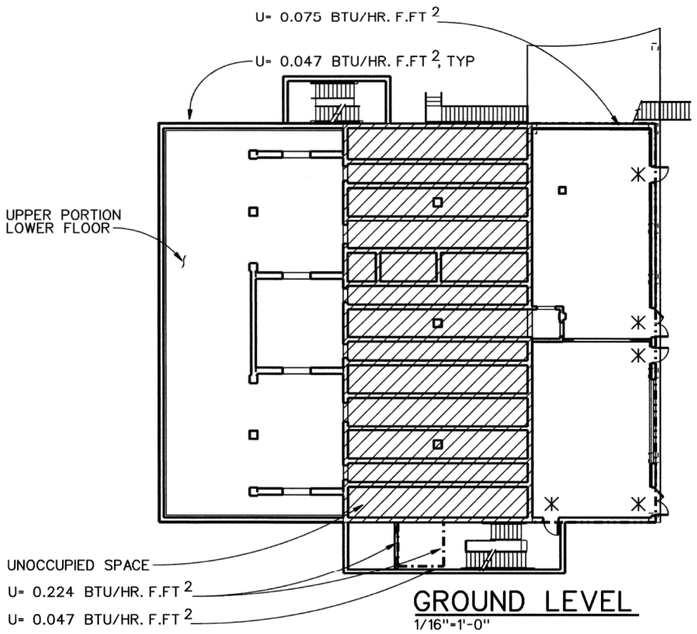

GROUND LEVEL
1/16"=1'-0"

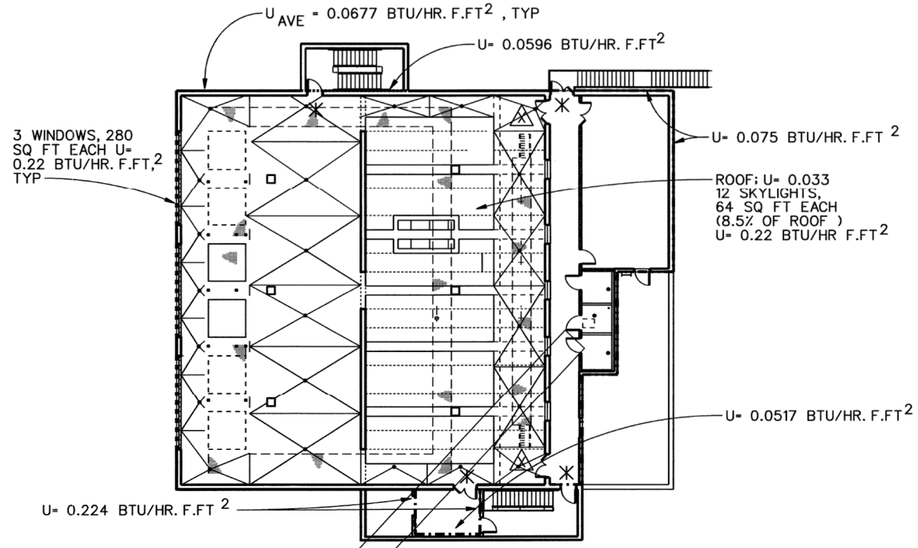

UPPER LEVEL
1/16"=1'-0"

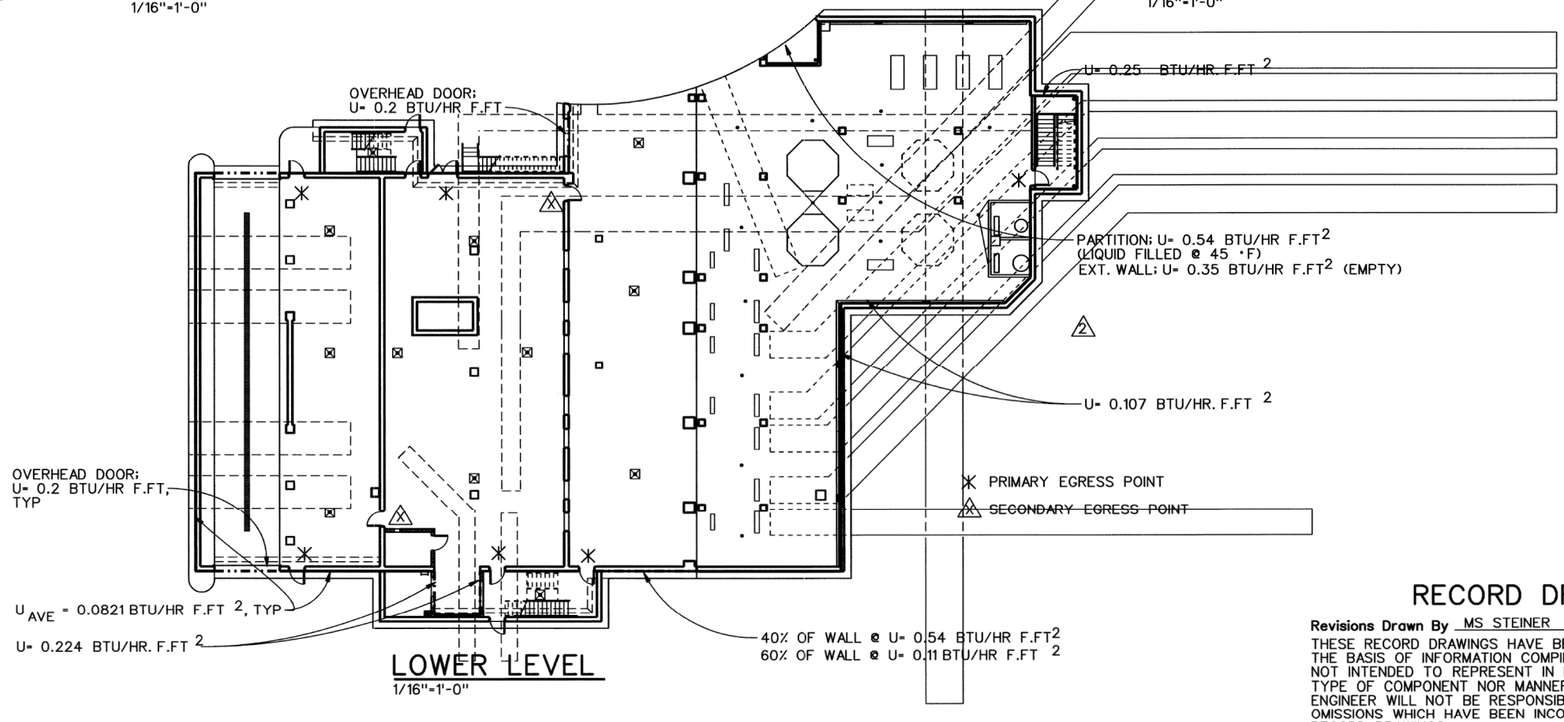

LOWER LEVEL
1/16"=1'-0"

RECORD DRAWINGS

Revisions Drawn By MS STEINER **Date** NOV 2003

THESE RECORD DRAWINGS HAVE BEEN PREPARED, IN PART, ON THE BASIS OF INFORMATION COMPILED BY OTHERS. THEY ARE NOT INTENDED TO REPRESENT IN DETAIL THE EXACT LOCATION, TYPE OF COMPONENT NOR MANNER OF CONSTRUCTION. THE ENGINEER WILL NOT BE RESPONSIBLE FOR ANY ERRORS OR OMISSIONS WHICH HAVE BEEN INCORPORATED INTO THE RECORD DRAWINGS.

REUSE OF DOCUMENTS: THIS DOCUMENT, AND THE IDEAS AND DESIGNS INCORPORATED HEREIN, AS AN INSTRUMENT OF PROFESSIONAL SERVICE, IS THE PROPERTY OF CH2M HILL AND IS NOT TO BE USED, WHOLE OR IN PART, FOR ANY OTHER PROJECT WITHOUT THE WRITTEN AUTHORIZATION OF CH2M HILL. © CH2M HILL

The Contract Document Drawings are printed documents dated July, 1999, as subsequently amended, which define the scope, extent, and character of the work. The original document drawing was sealed & signed by Edward A. Barlow-Pieterick State of Oregon, Registered Architect.

DSGN E BARLOW		11/03	RECORD DRAWING	MSS	LJP	VERIFY SCALE	
DR W LOVE	2	2/01	CIR NO. 289	EBP	LJP	BAR IS ONE INCH ON ORIGINAL DRAWING. 0 1"	
CHK J CAVE	1	8/99	ADDENDUM NO. 3	AGO	SCC	IF NOT ONE INCH ON THIS SHEET, ADJUST SCALES ACCORDINGLY.	
APVD J GOETZ	NO.	DATE	REVISION	BY	APVD		

CH2MHILL

ROCK CREEK FACILITY
EXPANSION - PHASE 5
PACKAGE B

UNIFIED SEWERAGE AGENCY
WASHINGTON COUNTY, OREGON

PRELIMINARY TREATMENT
HEADWORKS

EXIT PLAN

SHEET	204
DWG	520-A-102
DATE	JULY 1999
PROJ	146190

//CVONT1/prj/Unified Sewerage Agency/ROCK CREEK PHASE 5/design/CAD/drawings/r5b20g35.dlv 07-JUN-2004

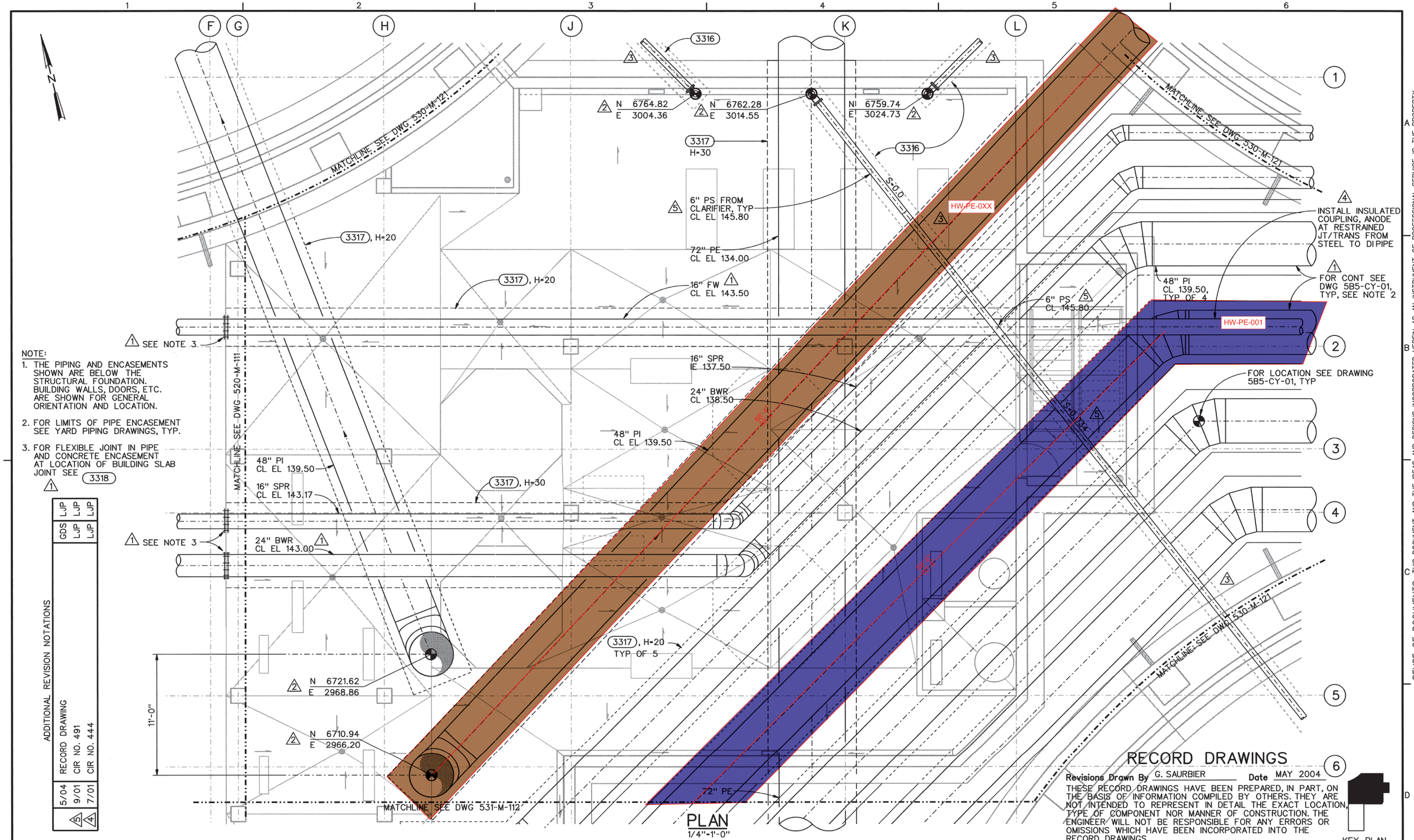

PLAN
1/4"=1'-0"

NOTE:
1. THE PIPING AND ENCASEMENTS SHOWN ARE BELOW THE STRUCTURAL FOUNDATION. BUILDING WALLS, DOORS, ETC. ARE SHOWN FOR GENERAL ORIENTATION AND LOCATION.
2. FOR LIMITS OF PIPE ENCASEMENT SEE YARD PIPING DRAWINGS, TYP.
3. FOR FLEXIBLE JOINT IN PIPE AND CONCRETE ENCASEMENT AT LOCATION OF BUILDING SLAB JOINT SEE 3318

ADDITIONAL REVISION NOTATIONS

RECORD DRAWING	CIR NO. 491	CIR NO. 444
5/04	9/01	7/01
6 4		
GDS	LJP	LJP
	LJP	LJP

RECORD DRAWINGS

Revisions Drawn By G. SAURBIER Date MAY 2004

THESE RECORD DRAWINGS HAVE BEEN PREPARED, IN PART, ON THE BASIS OF INFORMATION COMPILED BY OTHERS. THEY ARE NOT INTENDED TO REPRESENT IN DETAIL THE EXACT LOCATION, TYPE OF COMPONENT NOR MANNER OF CONSTRUCTION. THE ENGINEER WILL NOT BE RESPONSIBLE FOR ANY ERRORS OR OMISSIONS WHICH HAVE BEEN INCORPORATED INTO THE RECORD DRAWINGS.

KEY PLAN

The Contract Document Drawings are printed documents dated July. 1999, as subsequently amended, which define the scope, extent, and character of the work. The original document drawing was sealed & signed by Robert M. Bracken State of Oregon, P.E. No. 9299, dated July 22, 1977.

DSGN	B YOUKER	3	5/00	CIR NO. 129	PWB	LJP
DR	M OBLESKI	2	3/00	CIR NO. 090	JAN	LJP
CHK	R BRACKEN	1	2/00	CIR NO. 055	BAY	LJP
APVD	J GOETZ	NO.	DATE	REVISION	BY	APVD

VERIFY SCALE
BAR IS ONE INCH ON ORIGINAL DRAWING. 0 1"
IF NOT ONE INCH ON THIS SHEET, ADJUST SCALES ACCORDINGLY.

CH2MHILL

ROCK CREEK FACILITY
EXPANSION - PHASE 5
PACKAGE B
UNIFIED SEWERAGE AGENCY
WASHINGTON COUNTY, OREGON

PRIMARY TREATMENT
MECHANICAL
BELOW SLAB
GALLERY PLAN

SHEET	328
DWG	531-M-111
DATE	JULY 1999
PROJ	146190

REUSE OF DOCUMENTS: THIS DOCUMENT, AND THE IDEAS AND DESIGNS INCORPORATED HEREIN, AS AN INSTRUMENT OF PROFESSIONAL SERVICE, IS THE PROPERTY OF CH2M HILL AND IS NOT TO BE USED, WHOLE OR IN PART, FOR ANY OTHER PROJECT WITHOUT THE WRITTEN AUTHORIZATION OF CH2M HILL. © CH2M HILL

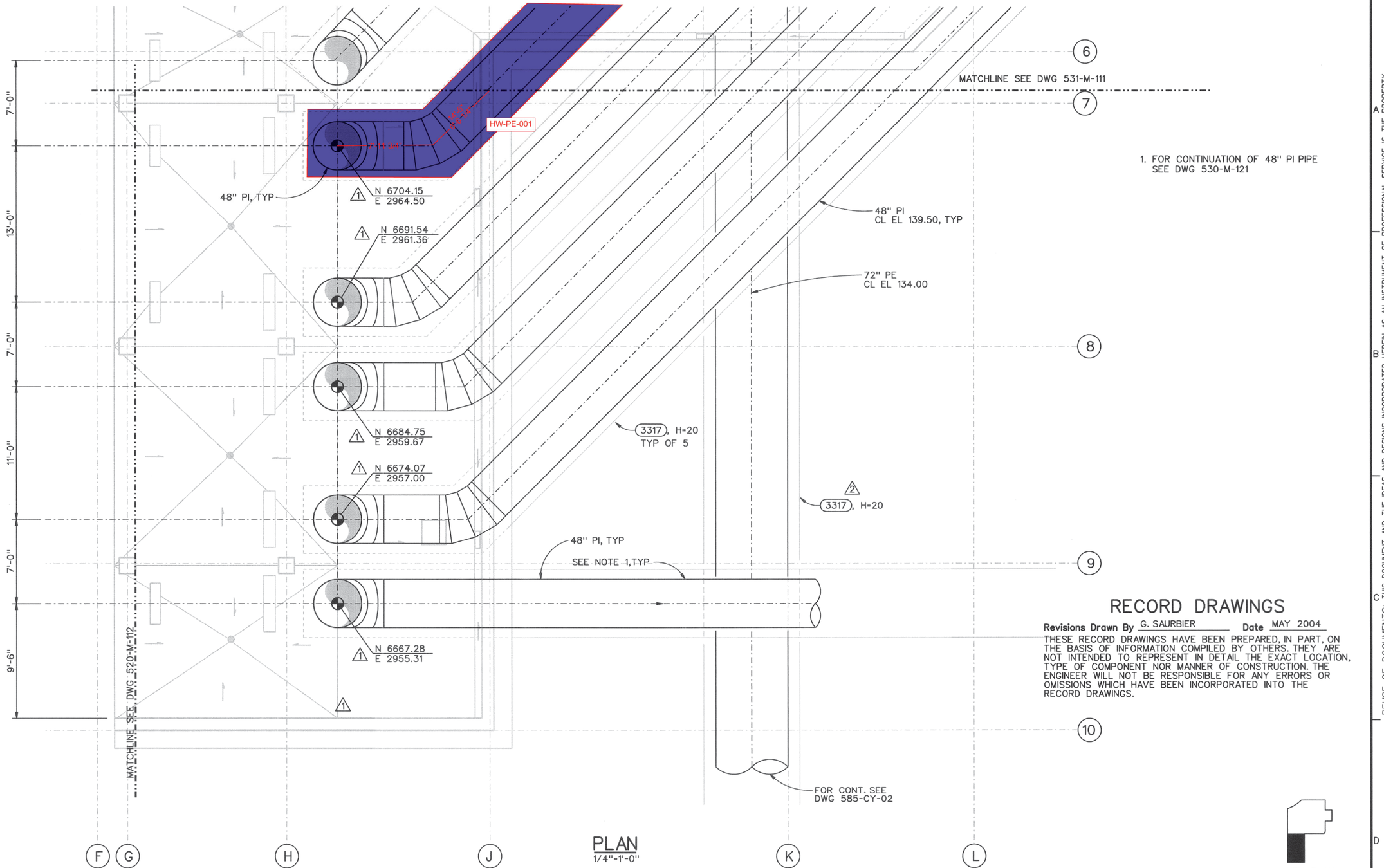

1. FOR CONTINUATION OF 48" PI PIPE SEE DWG 530-M-121

RECORD DRAWINGS

Revisions Drawn By G. SAURBIER **Date** MAY 2004

THESE RECORD DRAWINGS HAVE BEEN PREPARED, IN PART, ON THE BASIS OF INFORMATION COMPILED BY OTHERS. THEY ARE NOT INTENDED TO REPRESENT IN DETAIL THE EXACT LOCATION, TYPE OF COMPONENT NOR MANNER OF CONSTRUCTION. THE ENGINEER WILL NOT BE RESPONSIBLE FOR ANY ERRORS OR OMISSIONS WHICH HAVE BEEN INCORPORATED INTO THE RECORD DRAWINGS.

PLAN
1/4"=1'-0"

KEY PLAN

REUSE OF DOCUMENTS: THIS DOCUMENT, AND THE IDEAS AND DESIGNS INCORPORATED HEREIN, AS AN INSTRUMENT OF PROFESSIONAL SERVICE, IS THE PROPERTY OF CH2M HILL AND IS NOT TO BE USED, WHOLE OR IN PART, FOR ANY OTHER PROJECT WITHOUT THE WRITTEN AUTHORIZATION OF CH2M HILL. © CH2M HILL

The Contract Document Drawings are printed documents dated July 1999, as subsequently amended, which define the scope, extent, and character of the work. The original document drawing was sealed & signed by Robert M. Bracken, State of Oregon, P. E. No. 9299, dated July 22, 1977.

DSGN B YOUKER	2	5/04	RECORD DRAWING	GDS	LJP	VERIFY SCALE: BAR IS ONE INCH ON ORIGINAL DRAWING. 0 1" IF NOT ONE INCH ON THIS SHEET, ADJUST SCALES ACCORDINGLY.
DR M OBLESKI	1	5/01	CIR NO. 395	JAN	LJP	
CHK R BRACKEN		3/00	CIR NO. 090	AGO	LJP	
APVD J GOETZ	NO.	DATE	REVISION	BY	APVD	

CH2MHILL

ROCK CREEK FACILITY
EXPANSION - PHASE 5
PACKAGE B

UNIFIED SEWERAGE AGENCY
WASHINGTON COUNTY, OREGON

PRIMARY TREATMENT
MECHANICAL
BELOW SLAB
GALLERY PLAN

SHEET	329
DWG	531-M-112
DATE	JULY 1999
PROJ	146190

//CVONT1/prj/Unified Sewerage Agency/ROCK CREEK PHASE 5/design/CAD/drawings/r531m112.dlv PLOT DATE:03-JUN-2004 PLOT TIME:13:39:15

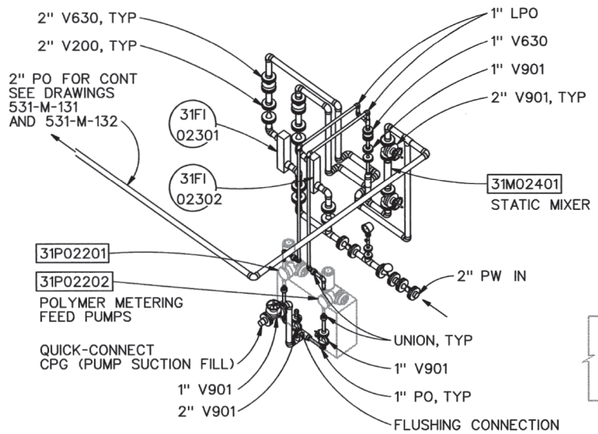

DETAIL 2
NTS 531-M-121

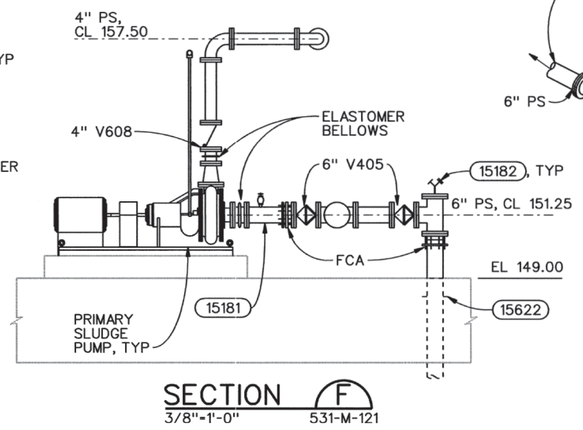

SECTION F
3/8"=1'-0" 531-M-121

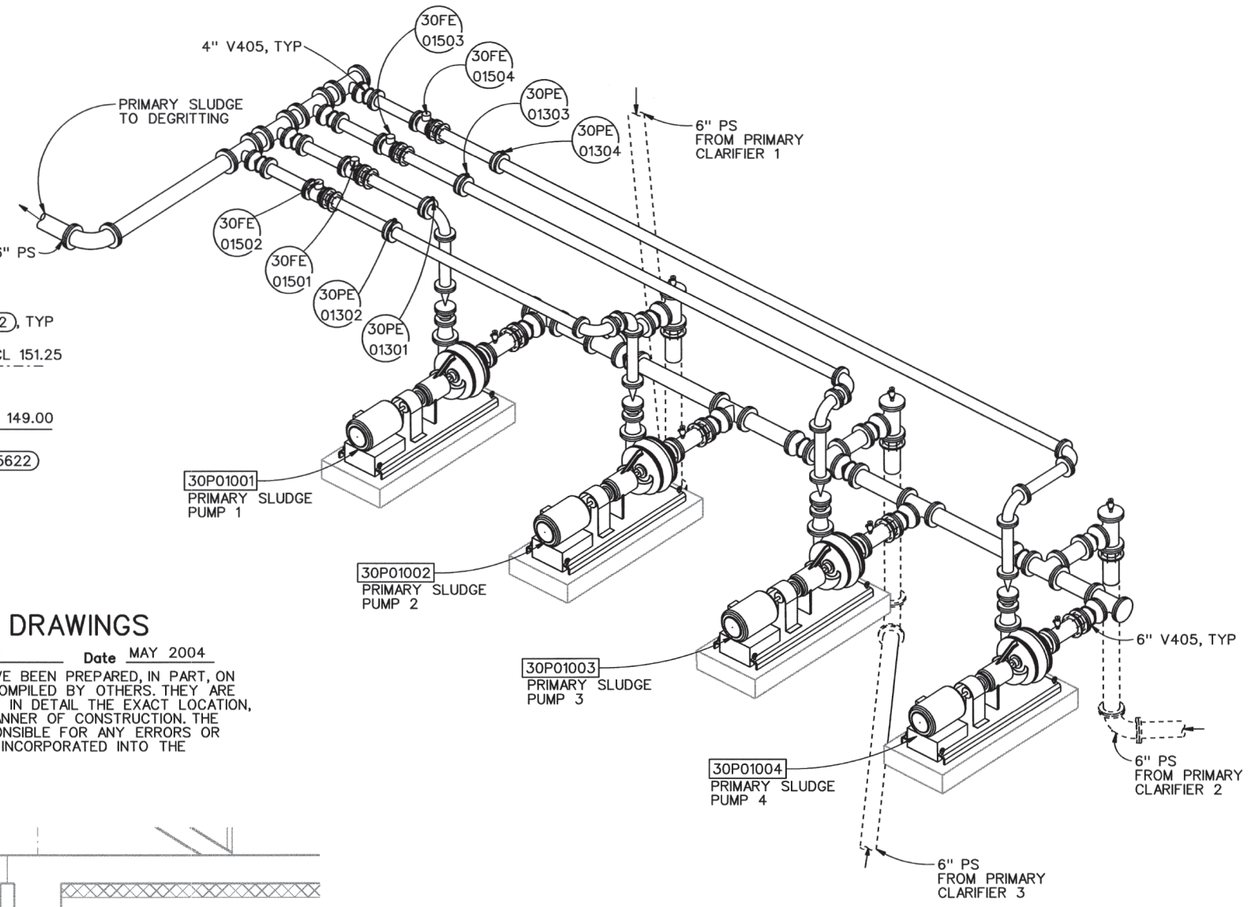

RECORD DRAWINGS

Revisions Drawn By L BENTHIN **Date** MAY 2004

THESE RECORD DRAWINGS HAVE BEEN PREPARED, IN PART, ON THE BASIS OF INFORMATION COMPILED BY OTHERS. THEY ARE NOT INTENDED TO REPRESENT IN DETAIL THE EXACT LOCATION, TYPE OF COMPONENT NOR MANNER OF CONSTRUCTION. THE ENGINEER WILL NOT BE RESPONSIBLE FOR ANY ERRORS OR OMISSIONS WHICH HAVE BEEN INCORPORATED INTO THE RECORD DRAWINGS.

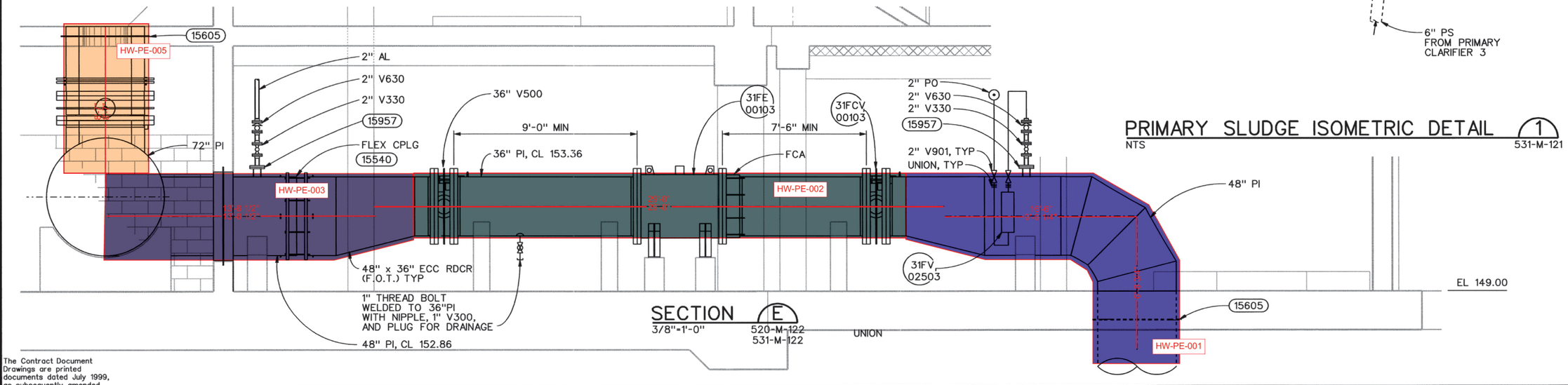

SECTION E
3/8"=1'-0" 520-M-122 531-M-122

PRIMARY SLUDGE ISOMETRIC DETAIL 1
NTS 531-M-121

The Contract Document Drawings are printed documents dated July 1999, as subsequently amended, which define the scope, extent, and character of the work. The original document drawing was sealed & signed by William B. Wagner, State of Oregon, P. E. No. 10642, dated July 18, 1980.

DSGN B YOUKER						VERIFY SCALE	CH2MHILL
DR M OBLESKI						BAR IS ONE INCH ON ORIGINAL DRAWING. IF NOT ONE INCH ON THIS SHEET, ADJUST SCALES ACCORDINGLY.	ROCK CREEK FACILITY EXPANSION - PHASE 5 PACKAGE B
CHK K ERICKSON							UNIFIED SEWERAGE AGENCY WASHINGTON COUNTY, OREGON
APVD J GOETZ	NO.	DATE	REVISION	BY	APVD		PRIMARY TREATMENT MECHANICAL GALLERY SECTIONS AND DETAIL
		5/04	RECORD DRAWING	LMB	LJP		

SHEET	336
DWG	531-M-202
DATE	JULY 1999
PROJ	146190

//CVONT1/prj/Unified Sewerage Agency/ROCK CREEK PHASE 5/design/CAD/drawings/r520m404.dlv PLOT DATE: 03-JUN-2004 PLOT TIME: 09:41:26

REUSE OF DOCUMENTS: THIS DOCUMENT, AND THE IDEAS AND DESIGNS INCORPORATED HEREIN, AS AN INSTRUMENT OF PROFESSIONAL SERVICE, IS THE PROPERTY OF CH2M HILL AND IS NOT TO BE USED, WHOLE OR IN PART, FOR ANY OTHER PROJECT WITHOUT THE WRITTEN AUTHORIZATION OF CH2M HILL. © CH2M HILL

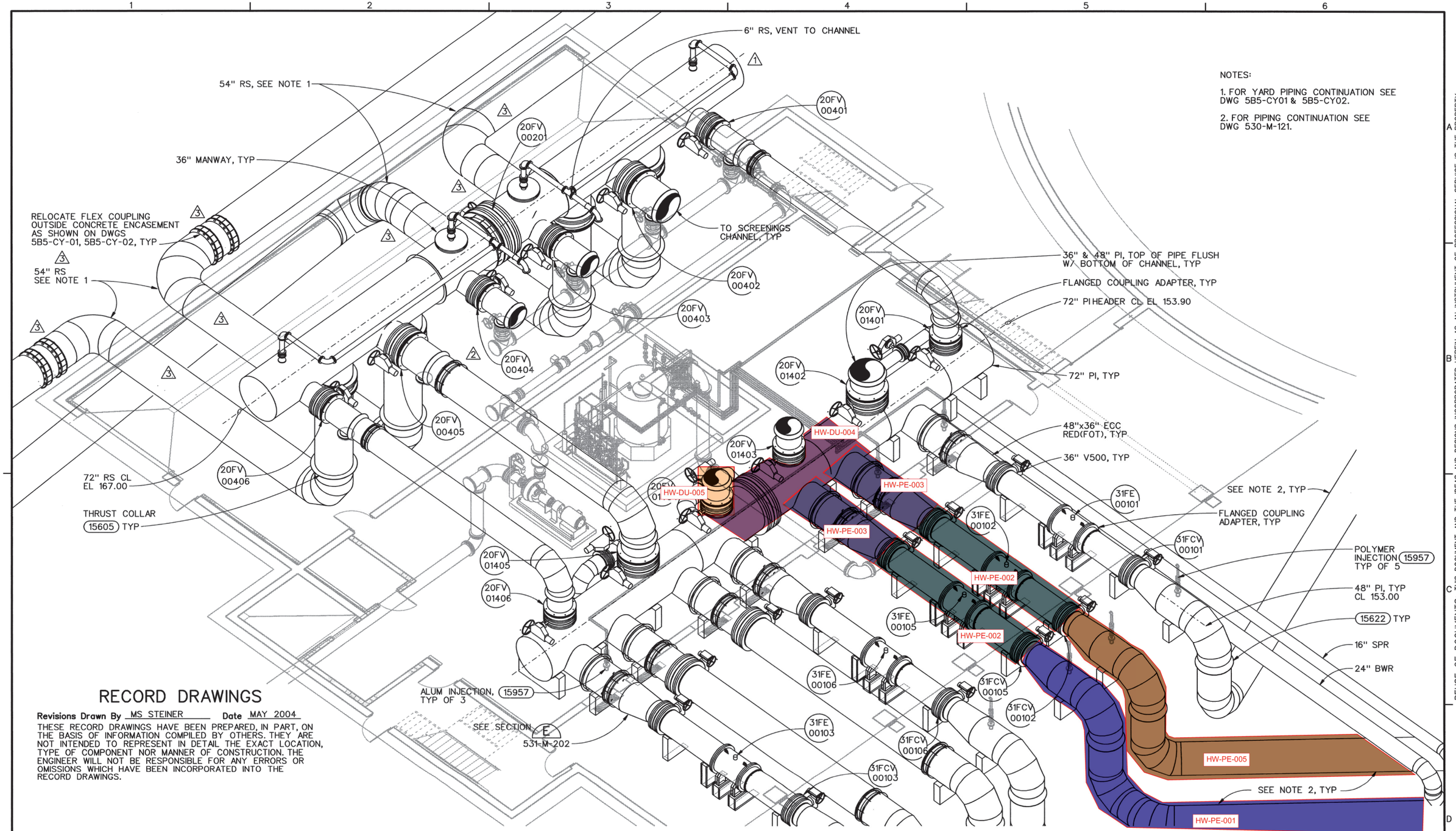

NOTES:

1. FOR YARD PIPING CONTINUATION SEE DWG 5B5-CY01 & 5B5-CY02.

2. FOR PIPING CONTINUATION SEE DWG 530-M-121.

RECORD DRAWINGS

Revisions Drawn By MS STEINER **Date** MAY 2004

THESE RECORD DRAWINGS HAVE BEEN PREPARED, IN PART, ON THE BASIS OF INFORMATION COMPILED BY OTHERS. THEY ARE NOT INTENDED TO REPRESENT IN DETAIL THE EXACT LOCATION, TYPE OF COMPONENT NOR MANNER OF CONSTRUCTION. THE ENGINEER WILL NOT BE RESPONSIBLE FOR ANY ERRORS OR OMISSIONS WHICH HAVE BEEN INCORPORATED INTO THE RECORD DRAWINGS.

ADDITIONAL REVISION NOTATIONS

	5/04	RECORD DRAWING	MSS	LJP

The Contract Document Drawings are printed documents dated July 1999, as subsequently amended, which define the scope, extent, and character of the work. The original document drawing was sealed & signed by Robert M. Bracken, State of Oregon, P.E. No. 9299, dated July 22, 1977.

DSGN	B YOUKER					
DR	M OBLESKI					
CHK	RM BRACKEN					
APVD	J GOETZ					
NO.	DATE	REVISION	BY	APVD		
3	2/00	CIR NO. 055	BAY	LJP		
2	1/00	CIR NO. 037	BAY	LJP		
1	1/00	CIR NO. 034	BAY	LJP		

VERIFY SCALE
BAR IS ONE INCH ON ORIGINAL DRAWING.
0 1"
IF NOT ONE INCH ON THIS SHEET, ADJUST SCALES ACCORDINGLY.

CH2MHILL

ROCK CREEK FACILITY
EXPANSION - PHASE 5
PACKAGE B

UNIFIED SEWERAGE AGENCY
WASHINGTON COUNTY, OREGON

PRELIMINARY TREATMENT
MECHANICAL
INFLUENT AND EFFLUENT HEADER
ISOMETRIC DETAIL

SHEET	262
DWG	520-M-402
DATE	JULY 1999
PROJ	146190

//CVONT1/prj/Unified Sewerage Agency/ROCK CREEK PHASE 5/design/CAD/drawings/r520m402.dlv 03-JUN-2004 09:40:37

REUSE OF DOCUMENTS: THIS DOCUMENT, AND THE IDEAS AND DESIGNS INCORPORATED HEREIN, AS AN INSTRUMENT OF PROFESSIONAL SERVICE, IS THE PROPERTY OF CH2M HILL AND IS NOT TO BE USED, WHOLE OR IN PART, FOR ANY OTHER PROJECT WITHOUT THE WRITTEN AUTHORIZATION OF CH2M HILL. © CH2M HILL

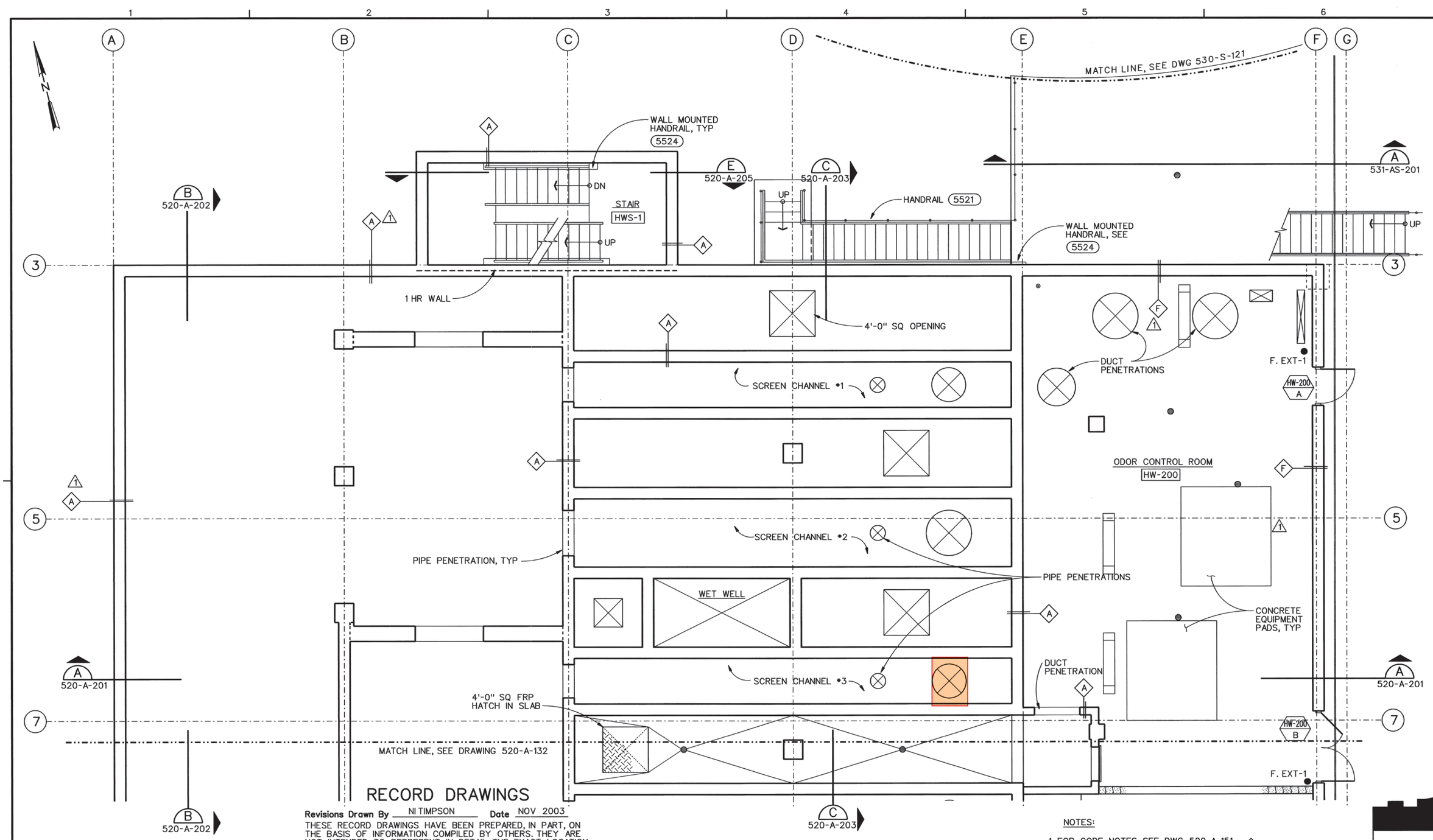

RECORD DRAWINGS

Revisions Drawn By NI TIMPSON **Date** NOV 2003

THESE RECORD DRAWINGS HAVE BEEN PREPARED, IN PART, ON THE BASIS OF INFORMATION COMPILED BY OTHERS. THEY ARE NOT INTENDED TO REPRESENT IN DETAIL THE EXACT LOCATION, TYPE OF COMPONENT NOR MANNER OF CONSTRUCTION. THE ENGINEER WILL NOT BE RESPONSIBLE FOR ANY ERRORS OR OMISSIONS WHICH HAVE BEEN INCORPORATED INTO THE RECORD DRAWINGS.

PLAN

1/4"=1'-0"

NOTES:

1. FOR CODE NOTES SEE DWG 520-A-151
2. SEE DWG 520-A-302 FOR WALL TYPES

KEY PLAN

REUSE OF DOCUMENTS: THIS DOCUMENT, AND THE IDEAS AND DESIGNS INCORPORATED HEREIN, AS AN INSTRUMENT OF PROFESSIONAL SERVICE, IS THE PROPERTY OF CH2M HILL AND IS NOT TO BE USED, WHOLE OR IN PART, FOR ANY OTHER PROJECT WITHOUT THE WRITTEN AUTHORIZATION OF CH2M HILL. © CH2M HILL

The Contract Document Drawings are printed documents dated July 1999, as subsequently amended, which define the scope, extent, and character of the work. The original document drawing was sealed & signed by Edward A. Barlow-Pieterick State of Oregon, Registered Architect.

DSGN E BARLOW						
DR W LOVE						
CHK J CAVE						
APVD J GOETZ						
	NO.	DATE	REVISION	BY	APVD	
		11/03	RECORD DRAWING	NIT	LJP	
	1	2/01	CIR NO. 289	EBP	LJP	

VERIFY SCALE
BAR IS ONE INCH ON ORIGINAL DRAWING. 0 1"
IF NOT ONE INCH ON THIS SHEET, ADJUST SCALES ACCORDINGLY.

CH2MHILL

ROCK CREEK FACILITY
EXPANSION - PHASE 5
PACKAGE B
UNIFIED SEWERAGE AGENCY
WASHINGTON COUNTY, OREGON

PRELIMINARY TREATMENT
ARCHITECTURAL
HEADWORKS
GROUND LEVEL PLAN

SHEET	207
DWG	520-A-131
DATE	JULY 1999
PROJ	146190

//CVONT1/prj/Unified Sewerage Agency/ROCK CREEK PHASE 5/design/CAD/drawings/r520a131.dlv PLOT DATE: 03-JUN-2004 PLOT TIME: 08:01:03

PE **PRIMARY EFFLUENT BYPASS**

NOTES:
1. FOR GENERAL YARD PIPING NOTES & LEGEND SEE DRAWING 601-G-11
2. EXISTING ITEMS TO BE DEMOLISHED NOT SHOWN FOR CLARITY. FOR EXISTING ITEMS TO BE DEMOLISHED SEE DWG 605-CD-101.
3. FOR ADDITIONAL PIPING INFORMATION SEE DWG 660-M-120K AND 660-M-120J.
4. CONSTRUCT MANHOLES AS SHOWN ON (10).
5. CONNECT TO EXISTING 72" PE BYPASS WITH WELDED BUTT-STRAP. COAT AND LINE WELDED JOINT AS SPECIFIED.
6. CONNECT TO EXISTING 2" NG WITH DIELECTRIC UNION.

N

0 20 40 60
Scale In Feet

N 5763.66
E 3780.12
FIELD VERIFY

REMOVE CAP AND CONNECT 8" PW TO EXISTING CLDI PW

MAINTAIN 3' MIN COVER ON 8" PW

REMOVE EXISTING BLIND FLANGE AND INSTALL 60" VALVE

2335

60" V500, SEE (15641)

60" SE WITH BLIND FLANGE, IE 145.28, SEE (2311)

10'

REMOVE BLIND FLANGE AND CONNECT NEW 60" SE TO EXISTING 60" WS SE

IE 145.00

CLSF BEDDING

60" SE

DOUBLE FLEX COUPLINGS (13895) (15540)

ABANDON EXST MANHOLE 3 4

PLUG EXISTING 12" SS

60" TE WITH BLIND FLANGE, SEE DWG 650-M-130D

72" PE BYPASS, LOCATE AND CONNECT TO EXST 72" WS PE BYPASS (2311), SEE NOTE 5

PE-PE-003

N 5600.39
E 3738.91
FIELD VERIFY

PI, CENTERLINE
N 5574.95
E 3755.99

30'± CONTRACTOR TO FIELD VERIFY

8" PW, IE 140.00

CLSF PIPE BEDDING

A 605-CG-201

DOUBLE FLEX COUPLINGS (13895) (15540), SIM

PE-PE-001

42" PE

CONNECT 4" SPD TO EXST

4" SPD

2" NG CL EL 143.67

INSULATING FLANGE AT CONNECTION TO EXST

N 5481.62
E 3575.65

AREA DRAIN, (220), TYP (2431)

2" NG W/ FLANGE JT AT EL 146.75

CONNECT TO EXST 2" NG, SEE NOTE 6

72" PE

PE-PE-002

PI, CENTERLINE
N 5444.48
E 3723.14

FLEX COUPLING (13895) (15540)

CLSF PIPE BEDDING

AREA DRAIN
N 5441.20
E 3725.66
CWS NO. 220
IE SW 144.75
TOG 148.40

3

78'

58.3'

16'

2'

10'

CONNECT TO EXISTING (13869)

CAP PORTIONS OF EXST 27" RE AS REQUIRED

IE 145.8 1

8" SS

CONNECT 6" SS TO MH, IE 144.2 (2431)

70'-4"

8" SS

27" RE

CONC. PLUG

CORE DRILL AND CONNECT TO EXISTING MH (2431) IE 144.10

CONCRETE PLUG

27" RE

AREA DRAIN
N 5553.17
E 3904.85
(220)
IE S 141.35
IE E 141.25
TOG 147.50

67.5'

3

69.5'

19.5'

41.5'

LIGHT POLE BASE

10'

8" SS

A 605-CG-201

STUB-OUT AND CAP FOR FUTURE IRRIGATION

2" PW, IE 148.0

IE 142.40

CLEANOUT (2440)

5'

UNDERDRAIN SUMP SEE 660-S-120L 2

MH
N 5599.31
E 4001.04
(10)
IE E 140.90
RIM 149.50

24" SS SLOPE 0.5% TO DAYLIGHT

IE 140.5, VIF

12" SS

KEY MAP

RECORD DRAWINGS

Revisions Drawn By AM VARGAS Date OCT 2005

THESE RECORD DRAWINGS HAVE BEEN PREPARED, IN PART, ON THE BASIS OF INFORMATION COMPILED BY OTHERS. THEY ARE NOT INTENDED TO REPRESENT IN DETAIL THE EXACT LOCATION, TYPE OF COMPONENT NOR MANNER OF CONSTRUCTION. THE ENGINEER WILL NOT BE RESPONSIBLE FOR ANY ERRORS OR OMISSIONS WHICH HAVE BEEN INCORPORATED INTO THE RECORD DRAWINGS.

5	10/05	RECORD DRAWINGS	AMV	LJP
	8/05	RFI	LJP	LJP

FOR SIGNATURES AND SEALS REFER TO ORIGINAL DRAWINGS DATED OCTOBER 2003

DSGN	TB PERIMON	3	8/04	RFQ 003 - SEE OPP. PAGE	TBP	LJP
DR	LG McCALL	2	4/04	RFI 026	LJP	LJP
CHK	WB WAGNER	1	12/03	ADDENDUM NO. 3	TBP	JEG
APVD	JE GRIFFITHS	NO.	DATE	REVISION	BY	APVD

VERIFY SCALE
BAR IS ONE INCH ON ORIGINAL DRAWING.
0 1"
IF NOT ONE INCH ON THIS SHEET, ADJUST SCALES ACCORDINGLY.

CH2MHILL

ROCK CREEK FACILITY
PHASE 6A
EXPANSION AND UPGRADES
CLEAN WATER SERVICES
WASHINGTON COUNTY, OREGON

CIVIL
YARD PIPING PLAN

SHEET	37
DWG	605-CY-101
DATE	MARCH 2004
PROJ	173962.CD

FILENAME: r605cy101d.dgn PLOT DATE: 31-OCT-2005 PLOT TIME: 16:01:52

THIS DOCUMENT, AND THE IDEAS AND DESIGNS INCORPORATED HEREIN, AS AN INSTRUMENT OF PROFESSIONAL SERVICE, IS THE PROPERTY OF CH2M HILL AND IS NOT TO BE USED, IN WHOLE OR IN PART, FOR ANY OTHER PROJECT WITHOUT THE WRITTEN AUTHORIZATION OF CH2MHILL. ©CH2M HILL
REUSE OF DOCUMENTS:

MATCH LINE, SEE DWG 5A5-CY-10

(42) SECONDARY CLARIFIER, SEE DWG 542-M-131

INVT 125.25

INVT 128.25 (6)

CONCRETE SADDLE BETWEEN INTERSECTION OF 36" ML AND 24" RAS

*36"ML

*24"RAS/WAS

INVT 151.00

INVT 125.58

CB*6 (4)
RIM EL 155.0
INVT 152.95 OUT

UNDERDRAIN, FOR CONTINUATION SEE DWG 542-M-131

SECONDARY EFFLUENT JUNCTION BOX, SEE DWG 542-S-401

INVT 149.6

INVT 149.5

INVT 147.0

INVT 134.80

(46) RAS/WAS PUMP STATION, SEE DWGS 546-M-121 AND 546-M-122

6"SSM

2"PW (ABANDONED)

3"PW

60"SE

INVT 152.42

INVT 147.48

FOR CONTINUATION SEE DWG 542-M-131

FOR CONTINUATION, SEE DWG 542-M-131

30"SE

1"SA

8"SS

8"SPD

6"D

10"UD

10"D

8"PW

NOTE: 12"SS CHANGED TO 12"D (3)

INVT 134.90

N 5872.71
E 3796.74
INVT 146.00 (4)

(2) 22.5° BENDS TO CLEAR TOP OF 60" SE PIPE

TRUCK WASH CB
RIM EL 155.0
INVT 152.00 (4)
(2038)

05-C-403

8"PD

1 1/4"PW

TRUCK WASH

1 1/2" V238 W/ HOSE RACK, (15154) AND (15720)

12" SS

N 5808.90
E 3859.81
INVT 151.85 (4)

SECONDARY CLARIFIER DEWATERING/UNDERDRAIN PUMP STATION, SEE DWG 542-M-401

FH
N 5794.60
E 3829.67
(15695)

6"PW

20'

6" V122 (15640) (2)

8" V122 (15640)

STUB-OUT W/CAP

72"PE, BYPASS

72"x72" TEE WITH BLIND FLANGE
N 5763.66
E 3780.12
INVT 142.00

INVT 135.00

60" BLIND FLANGE
N 5709.61
E 3780.86
INVT 145.28

REMOVE EXISTING MANHOLE

MH *7 (48")
N 5656.67
E 3762.45
RIM EL 155.05
INVT 142.35, IN W (18")
(2028) AND (2033)
INVT 142.25, OUT S (12")

27"RE

129'

PIPE ZONE: 2.0FT ABOVE INVT. USE CDF

PIPE ZONE: CRUSHED ROCK

12"S

PE-PE-003

27" RE CUT AND CAPPED EACH SIDE OF BIOSWALE

27" RE APPROX LOCATION BASED ON TERTIARY COMPLEX RECORD DRAWINGS

* SEE CIR NO. 151 FOR ADDITION OF GALVANIC ANODES AND ISOLATION FLANGES AND COUPLINGS ON 36"ML & 24"RAS. (5)

N

0 20 40 60
SCALE IN FEET

KEY MAP

N 5891.08
E 3664.02
INVT 126.25, WITH BLIND FLANGE

20' STUBOUT WITH BLIND FLANGE, INVT 149.5+/-

8"SPD

INVRT 152.6

CAP 3" PW

MH *6 (48")
N 5854.43
E 3769.67
RIM EL 155.30
INVT 151.40, IN N (8")
INVT 152.35, IN W (8")
INVT 152.15, OUT E (12")
(2028) AND (2033)

20' - 10"UD WITH CAP, INVT 129.70

20' - 10"D WITH CAP, INVT 127.70

24"RAS/WAS, 20' STUBOUT WITH BLIND FLANGE

INVT 141.50

6" STUBOUT WITH CAP, INVT 149.00

REMOVE PIPING

REMOVE SPRINKLERS AND IRRIGATION PIPING IN EXCAVATION ALONG SWALE. PLUG IRRIGATION PIPING AT LIMITS OF EXCAVATION.

PLUG AND ABANDON PIPING

N 5742.35
E 3763.92
INVT 145.55

N 5724.01
E 3750.28
INVT 145.34

60"x60" TEE
N 5717.71
E 3748.70
INVT 145.28

18"SS

60"SE

REMOVE CAP AND CONNECT TO EXISTING 60" SE, INVT 145.00 (FIELD VERIFY) WITH 60" TEE WITH BLIND FLANGE

THRUST RESTRAINT BLOCK INSTALLED IN TERTIARY CONTRACT SEE TERTIARY CL-T-120.

42"SE

TEMP ROUTE 3"SPD TO SURGE BASINS. RELOCATE SUMP PUMP (8)

CB*1 EL 154.8

2"NG

8"RD

INSTALL PLUG 18"SS

PLUG TO BE REMOVED IN FUTURE, WHEN PUMP REMOVED FROM MANHOLE

TEMP 3"SPD (8)

REMOVE 18"SS

45° BEND, INVT 133.82

EAST TERTIARY TREATMENT

APPROX LOCATION OF BURIED COLUMN STEEL INSTALLED IN TERTIARY CONTRACT, UNCOVERED AND REBURIED IN PHASE 5A

15' FROM DOWNSTREAM 45° BEND

PIPE ZONE: CRUSHED ROCK

MATCH LINE, SEE DWG 5A5-CY-12

NOTES:

1. EXISTING UNDERGROUND UTILITIES OBTAINED FROM AS-BUILTS. CONTRACTOR SHALL FIELD VERIFY DEPTH AND LOCATION AT CONSTRUCTION CROSSINGS PRIOR TO EXCAVATION.
2. UNLESS OTHERWISE SHOWN, ALL PIPING SHALL HAVE A MINIMUM OF 36" COVER.
3. ALL PIPES SHALL HAVE A CONSTANT SLOPE BETWEEN INVERT ELEVATIONS UNLESS A FITTING IS SHOWN.
4. VERTICAL BENDS IN PLANT PRESSURE PIPING MAY BE REQUIRED TO AVOID CONFLICTS WITH NEW OR EXISTING UTILITIES. THESE VERTICAL BENDS ARE GENERALLY NOT SHOWN ON THE DRAWING; HOWEVER, THE CONTRACTOR SHALL PROVIDE THEM AT NO ADDITIONAL COST TO THE OWNER.
5. FOR TRENCHING AND BACKFILL, SEE (15802) AND (15803).
6. COORDINATE YARD PIPING LOCATIONS WITH ELECTRICAL, SEE DWGS 590-E-06 THROUGH 590-E-11.

RECORD DRAWINGS

Revisions Drawn By R. FRIBERG Date 7/20/2001

THESE RECORD DRAWINGS HAVE BEEN PREPARED, IN PART, ON THE BASIS OF INFORMATION COMPILED BY OTHERS. THEY ARE NOT INTENDED TO REPRESENT IN DETAIL THE EXACT LOCATION, TYPE OF COMPONENT NOR MANNER OF CONSTRUCTION. THE ENGINEER WILL NOT BE RESPONSIBLE FOR ANY ERRORS OR OMISSIONS WHICH HAVE BEEN INCORPORATED INTO THE RECORD DRAWINGS.

ADDITIONAL REVISION NOTATIONS

11/01	RECORD DRAWING	BJM	RBF
(1)	9/00	CIR NO. 222	RBF	JMP
(2)	6/00	CIR NO. 198	RBF	JMP
(3)	5/00	CIR NO. 191	RBF	JMP
(4)	4/00	CIR NO. 181	RBF	JMP
(5)	4/00	CIR NO. 174	RBF	JMP
(6)	2/00	CIR NO. 153	RBF	JMP
(7)	2/00	CIR NO. 151	RBF	JMP

REUSE OF DOCUMENTS: THIS DOCUMENT, AND THE IDEAS AND DESIGNS INCORPORATED HEREIN, AS AN INSTRUMENT OF PROFESSIONAL SERVICE, IS THE PROPERTY OF CH2M HILL AND IS NOT TO BE USED, WHOLE OR IN PART, FOR ANY OTHER PROJECT WITHOUT THE WRITTEN AUTHORIZATION OF CH2M HILL. © CH2M HILL

The Contract Document Drawings are printed documents dated Feb. 1999, as subsequently amended, which define the scope, extent, and character of the work. The original document drawing was sealed & signed by William B. Wagner, State of Oregon, P.E. No. 10642, dated July 18, 1980.

DSGN	JA NESSL
DR	LG McCALL
CHK	WB WAGNER
APVD	J GOETZ

NO.	DATE	REVISION	BY	APVD
(4)	1/00	CIR NO. 137	RBF	JMP
(3)	10/99	CIR NO. 78	RBF	JMP
(2)	9/99	CIR NO. 2.1	AJW	JMP
(1)	7/99	CIR NO. 20	AJW	JMP

VERIFY SCALE
BAR IS ONE INCH ON ORIGINAL DRAWING.
0 1"
IF NOT ONE INCH ON THIS SHEET, ADJUST SCALES ACCORDINGLY.

CH2MHILL

ROCK CREEK FACILITY
EXPANSION - PHASE 5
PACKAGE A

UNIFIED SEWERAGE AGENCY
WASHINGTON COUNTY, OREGON

CIVIL

YARD PIPING PLAN

SHEET	36
DWG	5A5-CY-11
DATE	FEB 1999
PROJ	146190

r5r505cap.mst	2-8, 12-19, 21-39, 43-57, 61	r5r505border.mst	1-45, 47, 50-60, 63-63
r5r505cap.pm	32-36, 46, 61	r5r505key.mst	2-6, 19, 21, 26, 35-36, 46, 49-53
r5r505cap.Plot	1-53	r5r505opp.mst	32, 34
r5r505cmy.mst	47, 50-51, 61		

//CVONT1/prj/unified sewerage agency/rock creek phase 5/CAD/drawings/r5a5cy11.dlv PLOT DATE: 10-DEC-2001 PLOT TIME: 16:51:04

MATCH LINE, SEE DWG 5A5-CY-09

MATCH LINE, SEE DWG 5A5-CY-06

GALLERY

8"PW

(40) AERATION BASIN, SEE DWGS 540-M-121 THROUGH 540-M-133

FH
N 6190.75
E 3857.55
15695

6" V122 15640

72" PE BYPASS

8" SPD PENETRATES GALLERY WALL AT ℄ EL 159± SEE 540-M-123

INVT 139.50

FOR CONT. SEE 540-C-123

PIPE MATERIAL INTERFACE: UPSTREAM SOLID HDPE (UD) DOWNSTREAM DUCTILE IRON (D)

△3 3322 SIM WITH CLOSURE COLLAR, NO SEEP RING

CB •4
N 6066.23
E 3790.19
RIM EL 154.50
INVT 152.00
2038

12"x12"x8" WYE △7

15180

8"SS

INVT 136.00

12"SS

MH •5 (120")
N 6064.31
E 3677.25
RIM EL 155.48
INVT 129.50, IN N (72")
INVT 142.00, OUT E (72")
INVT 129.40, OUT SE (6")
2028 AND 2033

8"SPD

6"D

24.5ft

S=0.008

INVT 137.50

6"x4" WYE, INVERT 129.25

15'

PE-PE-003

72" PE BYPASS

N 6003.65
E 3865.45
INVT 150.95
SEE GRADING PLAN FOR BIOSWALE OUTLET

N 6031.94
E 3781.23
INVT 128.29

N 6034.39
E 3796.08
INVT 141.82

N 5981.89
E 3818.14
INVT 135.50

CB •5
RIM EL 155.00
INVT 152.92
2038

(42) SECONDARY CLARIFIER, SEE DWG 542-M-131

N 5984.03
E 3809.87
INVT 127.73

N 5972.93
E 3832.81
INVT 141.75

INVT 134.40

6"D

12"D

MATCH LINE, SEE DWG 5A5-CY-11

ADDITIONAL REVISION NOTATIONS

1	11/01	RECORD DRAWING	BJM	RBF
2	9/00	CIR NO. 222	RBF	JMP
6	1/00	CIR NO. 132	RBF	JMP
5	10/99	CIR NO. 78	RBF	JMP
4	10/99	CIR NO. 74	RBF	JMP
3	9/99	CIR NO. 65	AJW	JMP
2	9/99	CIR NO. 51		
1	4/99	ADDENDUM NO. 5	AGO	WBW
NO.	DATE	REVISION	BY	APVD

0 20 40 60
SCALE IN FEET

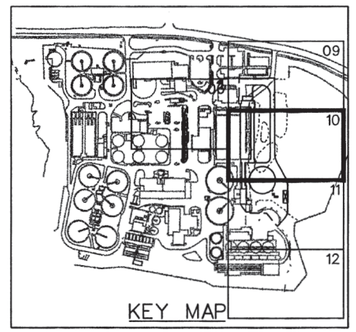

KEY MAP

NOTES:
1. EXISTING UNDERGROUND UTILITIES OBTAINED FROM AS-BUILTS. CONTRACTOR SHALL FIELD VERIFY DEPTH AND LOCATION AT CONSTRUCTION CROSSINGS PRIOR TO EXCAVATION.
2. UNLESS OTHERWISE SHOWN, ALL PIPING SHALL HAVE A MINIMUM OF 36" COVER.
3. ALL PIPES SHALL HAVE A CONSTANT SLOPE BETWEEN INVERT ELEVATIONS UNLESS A FITTING IS SHOWN.
4. VERTICAL BENDS IN PLANT PRESSURE PIPING MAY BE REQUIRED TO AVOID CONFLICTS WITH NEW OR EXISTING UTILITIES. THESE VERTICAL BENDS ARE GENERALLY NOT SHOWN ON THE DRAWING; HOWEVER, THE CONTRACTOR SHALL PROVIDE THEM AT NO ADDITIONAL COST TO THE OWNER.
5. FOR TRENCHING AND BACKFILL, SEE (15802) AND (15803).
6. COORDINATE YARD PIPING LOCATIONS WITH ELECTRICAL, SEE DWGS 590-E-06 THROUGH 590-E-11.

42 159.920

RECORD DRAWINGS

Revisions Drawn By R. FRIBERG Date 7/20/2001

THESE RECORD DRAWINGS HAVE BEEN PREPARED, IN PART, ON THE BASIS OF INFORMATION COMPILED BY OTHERS. THEY ARE NOT INTENDED TO REPRESENT IN DETAIL THE EXACT LOCATION, TYPE OF COMPONENT NOR MANNER OF CONSTRUCTION. THE ENGINEER WILL NOT BE RESPONSIBLE FOR ANY ERRORS OR OMISSIONS WHICH HAVE BEEN INCORPORATED INTO THE RECORD DRAWINGS.

REUSE OF DOCUMENTS: THIS DOCUMENT, AND THE IDEAS AND DESIGNS INCORPORATED HEREIN, AS AN INSTRUMENT OF PROFESSIONAL SERVICE, IS THE PROPERTY OF CH2M HILL AND IS NOT TO BE USED, WHOLE OR IN PART, FOR ANY OTHER PROJECT WITHOUT THE WRITTEN AUTHORIZATION OF CH2M HILL. © CH2M HILL

The Contract Document Drawings are printed documents dated Feb. 1999, as subsequently amended, which define the scope, extent, and character of the work. The original document drawing was sealed & signed by William B. Wagner, State of Oregon, P.E. No. 10,642, dated July 18, 1980.

DSGN	JA NESSL
DR	LG McCALL
CHK	WB WAGNER
APVD	J GOETZ

VERIFY SCALE
BAR IS ONE INCH ON ORIGINAL DRAWING. IF NOT ONE INCH ON THIS SHEET, ADJUST SCALES ACCORDINGLY.

CH2MHILL

ROCK CREEK FACILITY
EXPANSION - PHASE 5
PACKAGE A

UNIFIED SEWERAGE AGENCY
WASHINGTON COUNTY, OREGON

CIVIL

YARD PIPING PLAN

SHEET	35
DWG	5A5-CY-10
DATE	FEB 1999
PROJ	146190

r5x36border.mat 1-45, 47, 59-60, 63-63
r5x36bay.mat 2-9, 18, 21-26, 35-38, 46, 49-53
r5x36cpp.mat 32, 34
2-9, 12-19, 21-39, 43-57, 61
32-38, 46, 61
1-63
6-7, 47, 59-61
r5x36cpp.mat
r5x36bay.mat
r5x36cpp.mat
r5x36bay.mat

//CVONT1/prj/unified sewerage agency/rock creek phase 5/CAD/drawings/r5a5cy10.dlv PLOT DATE: 03-DEC-2001 PLOT TIME: 15:31:30

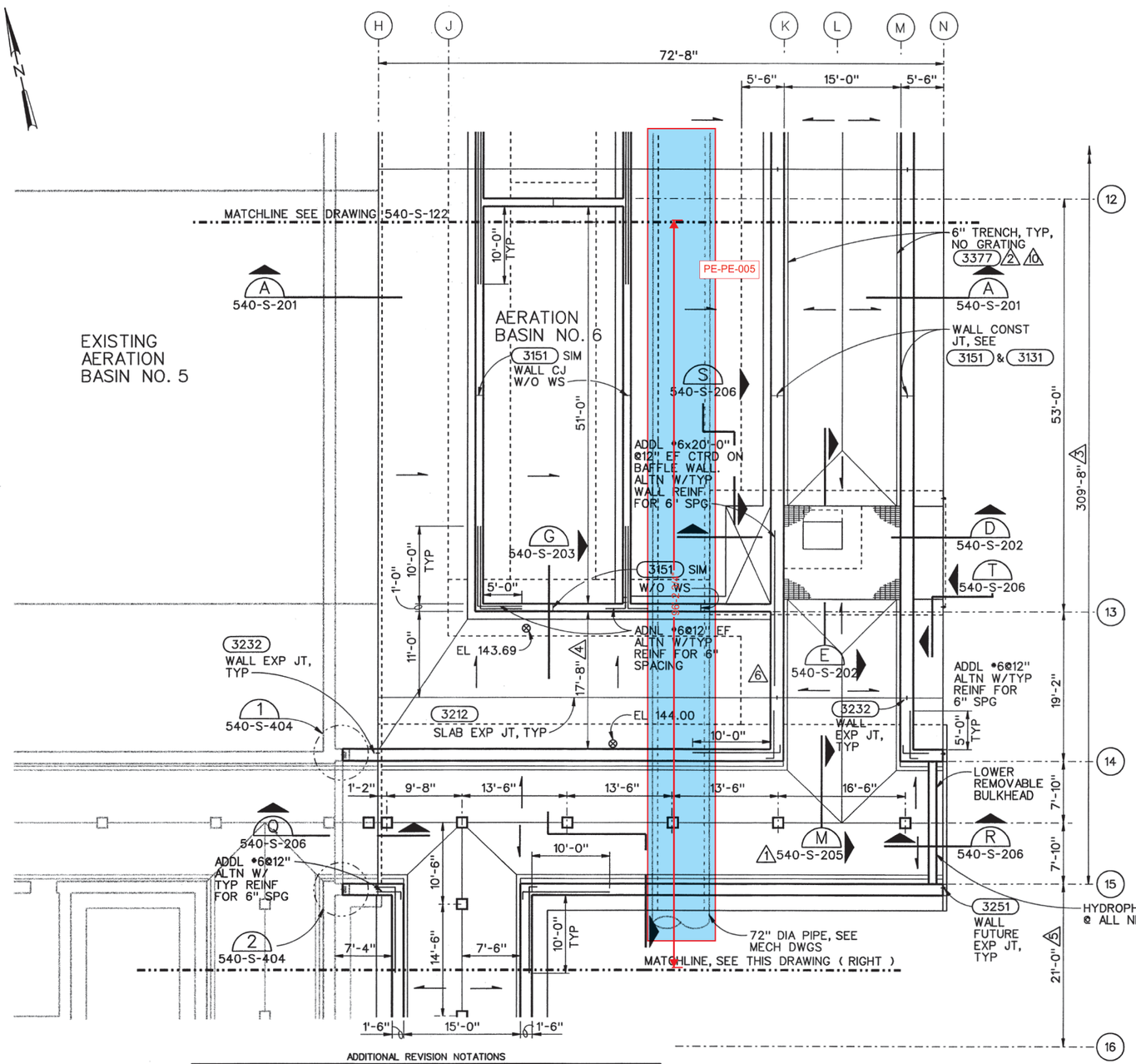

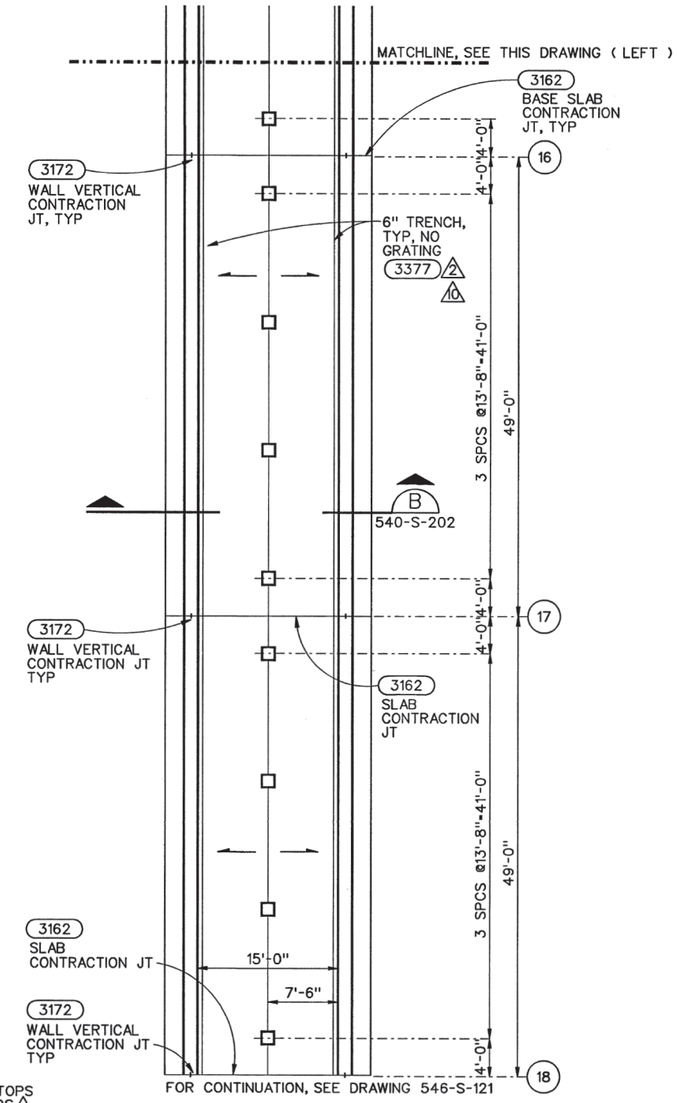

PARTIAL FOUNDATION PLAN
1/8"=1'-0"

PARTIAL FOUNDATION PLAN
1/8"=1'-0"

KEY PLAN

ADDITIONAL REVISION NOTATIONS

A	11/01	RECORD DRAWING	BJM	RBF
4	7/99	CIR NO. 24	ALF	JMP
3	4/00	CIR NO. 171	RBF	JMP
2	2/00	CIR NO. 150	PWB	JMP
1	10/99	CIR NO. 84	AJW	ALF
5	10/99	CIR NO. 58.2	AJW	ALF
4	10/99	CIR NO. 58.1	AJW	ALF
3	10/99	CIR NO. 58	AJW	JMP
2	9/99	CIR NO. 57	AJW	JMP
1	8/99	CIR NO. 13	AJW	JMP
NO.	DATE	REVISION	BY	APVD

RECORD DRAWINGS

Revisions Drawn By R. FRIBERG Date 7/13/2001

THESE RECORD DRAWINGS HAVE BEEN PREPARED, IN PART, ON THE BASIS OF INFORMATION COMPILED BY OTHERS. THEY ARE NOT INTENDED TO REPRESENT IN DETAIL THE EXACT LOCATION, TYPE OF COMPONENT NOR MANNER OF CONSTRUCTION. THE ENGINEER WILL NOT BE RESPONSIBLE FOR ANY ERRORS OR OMISSIONS WHICH HAVE BEEN INCORPORATED INTO THE RECORD DRAWINGS.

The Contract Document Drawings are printed documents dated Feb. 1999, as subsequently amended, which define the scope, extent, and character of the work. The original document drawing was sealed & signed by Alex L. Firth, State of Oregon, P.E. No. 15977, dated July 21, 1992.

DSGN	RA GERMAINE
DR	EJ PUIG
CHK	SM FREY
APVD	J GOETZ

VERIFY SCALE
BAR IS ONE INCH ON ORIGINAL DRAWING.
0 1"
IF NOT ONE INCH ON THIS SHEET, ADJUST SCALES ACCORDINGLY.

CH2MHILL

ROCK CREEK FACILITY
EXPANSION - PHASE 5
PACKAGE A
UNIFIED SEWERAGE AGENCY
WASHINGTON COUNTY, OREGON

SECONDARY TREATMENT
STRUCTURAL
EAST AERATION BASIN NO. 6
PARTIAL FOUNDATION PLAN

SHEET	103
DWG	540-S-123
DATE	FEB 1999
PROJ	146190

REUSE OF DOCUMENTS: THIS DOCUMENT, AND THE IDEAS AND DESIGNS INCORPORATED HEREIN, AS AN INSTRUMENT OF PROFESSIONAL SERVICE, IS THE PROPERTY OF CH2M HILL AND IS NOT TO BE USED, WHOLE OR IN PART, FOR ANY OTHER PROJECT WITHOUT THE WRITTEN AUTHORIZATION OF CH2M HILL. © CH2M HILL

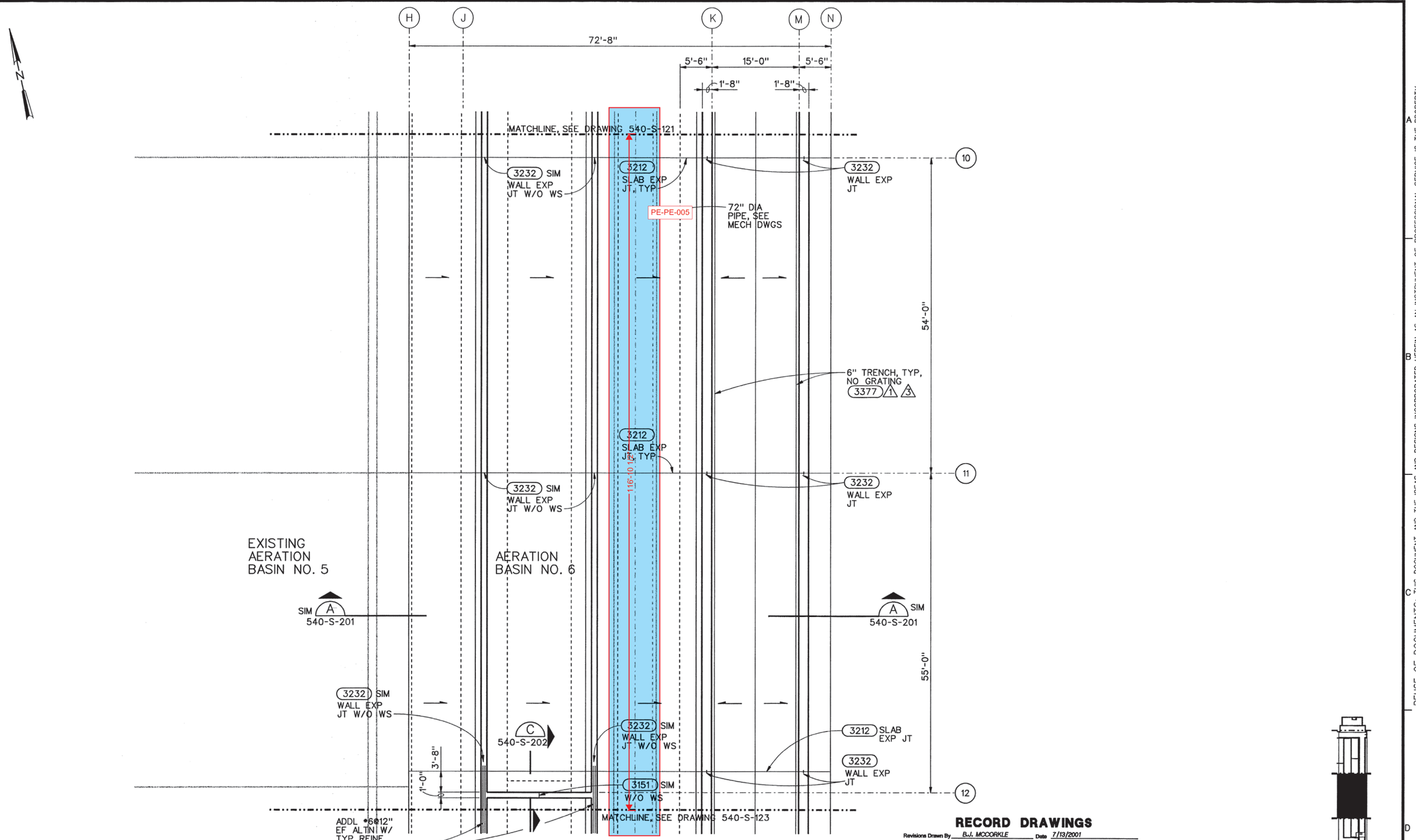

PARTIAL FOUNDATION PLAN

1/8"=1'-0"

RECORD DRAWINGS

Revisions Drawn By B.J. MCCORKLE Date 7/13/2001

THESE RECORD DRAWINGS HAVE BEEN PREPARED, IN PART, ON THE BASIS OF INFORMATION COMPILED BY OTHERS. THEY ARE NOT INTENDED TO REPRESENT IN DETAIL THE EXACT LOCATION, TYPE OF COMPONENT NOR MANNER OF CONSTRUCTION. THE ENGINEER WILL NOT BE RESPONSIBLE FOR ANY ERRORS OR OMISSIONS WHICH HAVE BEEN INCORPORATED INTO THE RECORD DRAWINGS.

KEY PLAN

The Contract Document Drawings are printed documents dated Feb. 1999, as subsequently amended, which define the scope, extent, and character of the work. The original document drawing was sealed & signed by Alex L. Firth, State of Oregon, P.E. No. 15977, dated July 21, 1992.

DSGN	RA GERMAINE
DR	EJ PUIG
CHK	SM FREY
APVD	J GOETZ

NO.	DATE	REVISION	BY	APVD
2	11/01	RECORD DRAWING	BJM	RBF
	7/99	CIR NO. 24	ALF	JMP
1	9/99	CIR NO. 57	AJW	JMP

VERIFY SCALE
BAR IS ONE INCH ON ORIGINAL DRAWING. 0 1"
IF NOT ONE INCH ON THIS SHEET, ADJUST SCALES ACCORDINGLY.

CH2MHILL

ROCK CREEK FACILITY EXPANSION - PHASE 5
PACKAGE A
UNIFIED SEWERAGE AGENCY
WASHINGTON COUNTY, OREGON

SECONDARY TREATMENT
STRUCTURAL
EAST AERATION BASIN NO. 6
PARTIAL FOUNDATION PLAN

SHEET	102
DWG	540-S-122
DATE	FEB 1999
PROJ	146190

//CVONT1/prj/unified sewerage agency/rock creek phase 5/CAD/drawings/r540s122.dlv PLOT DATE: 05-DEC-2001 PLOT TIME: 15:25:08

REUSE OF DOCUMENTS: THIS DOCUMENT AND THE IDEAS AND DESIGNS INCORPORATED HEREIN AS AN INSTRUMENT OF PROFESSIONAL SERVICE, IS THE PROPERTY OF CH2M HILL AND IS NOT TO BE USED, WHOLE OR IN PART, FOR ANY OTHER PROJECT WITHOUT THE WRITTEN AUTHORIZATION OF CH2M HILL. © CH2M HILL

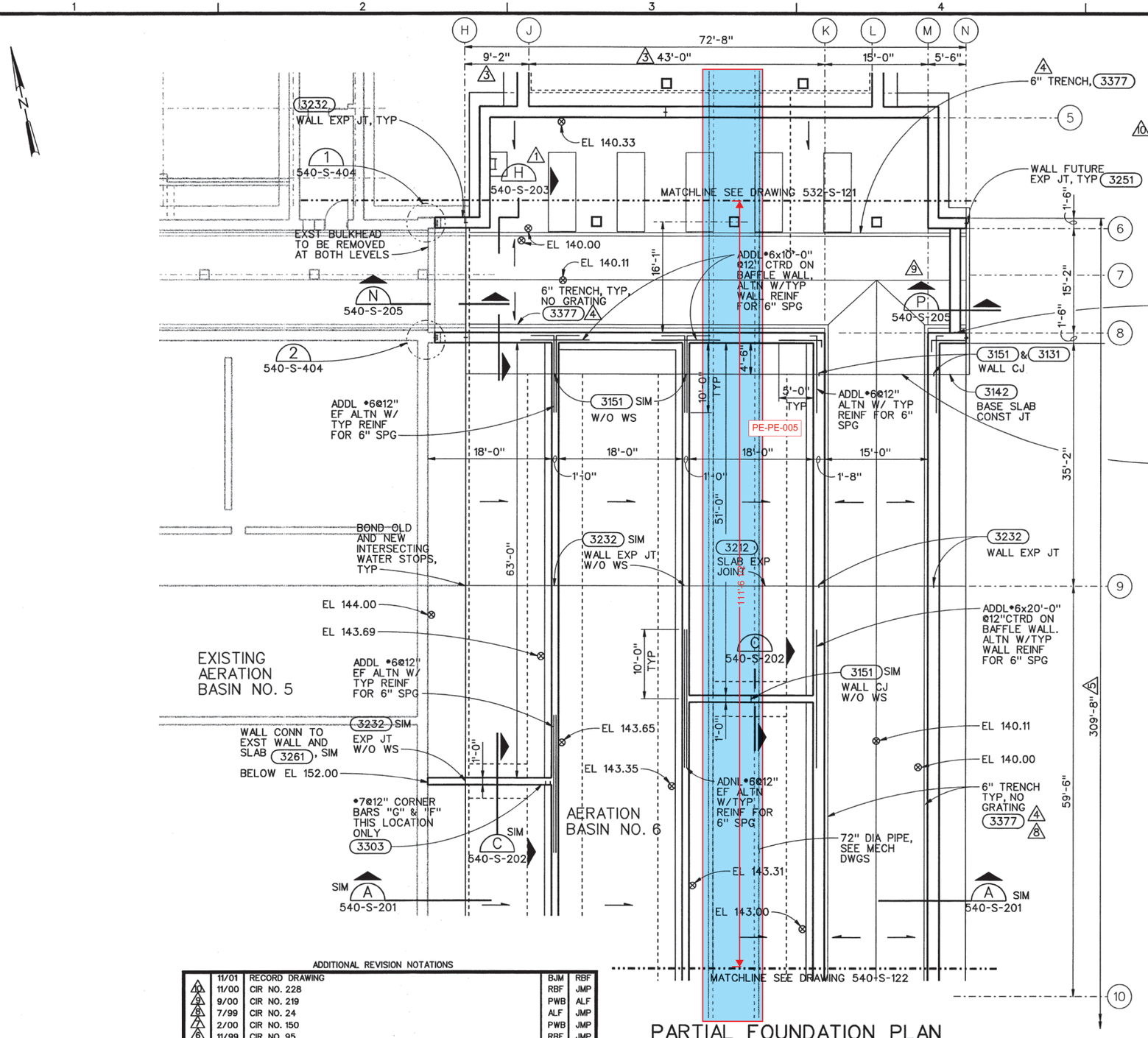

PLAN NOTES:

1. FOR GENERAL STRUCTURAL NOTES, SEE 3000
2. TEST WATER ELEVATION 161.0.
3. CONTRACTOR TO VERIFY ALL EXISTING CONDITIONS AND DIMENSIONS.

ADDITIONAL REVISION NOTATIONS

	11/01	RECORD DRAWING	BJM	RBF
10	11/00	CIR NO. 228	RBF	JMP
9	9/00	CIR NO. 219	PWB	ALF
8	7/99	CIR NO. 24	ALF	JMP
7	2/00	CIR NO. 150	PWB	JMP
6	11/99	CIR NO. 95	RBF	JMP
5	10/99	CIR NO. 58	AJW	JMP
4	9/99	CIR NO. 57	AJW	JMP
3	9/99	CIR NO. 51	PWB	ALF
2	8/99	CIR NO. 17	AJW	ALF
1	4/99	ADDENDUM NO. 4	MSM	ALF

NO. | DATE | REVISION | BY | APVD

PARTIAL FOUNDATION PLAN

1/8"=1'-0"

RECORD DRAWINGS

Revisions Drawn By R. FRIBERG Date 7/13/2001

THESE RECORD DRAWINGS HAVE BEEN PREPARED, IN PART, ON THE BASIS OF INFORMATION COMPILED BY OTHERS. THEY ARE NOT INTENDED TO REPRESENT IN DETAIL THE EXACT LOCATION, TYPE OF COMPONENT NOR MANNER OF CONSTRUCTION. THE ENGINEER WILL NOT BE RESPONSIBLE FOR ANY ERRORS OR OMISSIONS WHICH HAVE BEEN INCORPORATED INTO THE RECORD DRAWINGS.

KEY PLAN

The Contract Document Drawings are printed documents dated Feb. 1999, as subsequently amended, which define the scope, extent, and character of the work. The original document drawing was sealed & signed by Alex L. Firth, State of Oregon, P.E. No. 15977, dated July 21, 1992.

DSGN RA GERMAINE
DR EJ PUIG
CHK SM FREY
APVD J GOETZ

VERIFY SCALE
BAR IS ONE INCH ON ORIGINAL DRAWING.
0 1"
IF NOT ONE INCH ON THIS SHEET, ADJUST SCALES ACCORDINGLY.

CH2MHILL

ROCK CREEK FACILITY
EXPANSION - PHASE 5
PACKAGE A

UNIFIED SEWERAGE AGENCY
WASHINGTON COUNTY, OREGON

SECONDARY TREATMENT
STRUCTURAL
EAST AERATION BASIN NO. 6
PARTIAL FOUNDATION PLAN

SHEET	101
DWG	540-S-121
DATE	FEB 1999
PROJ	146190

REUSE OF DOCUMENTS: THIS DOCUMENT AND THE IDEAS AND DESIGNS INCORPORATED HEREIN, AS AN INSTRUMENT OF PROFESSIONAL SERVICE, IS THE PROPERTY OF CH2M HILL AND IS NOT TO BE USED, WHOLE OR IN PART, FOR ANY OTHER PROJECT WITHOUT THE WRITTEN AUTHORIZATION OF CH2M HILL. © CH2M HILL

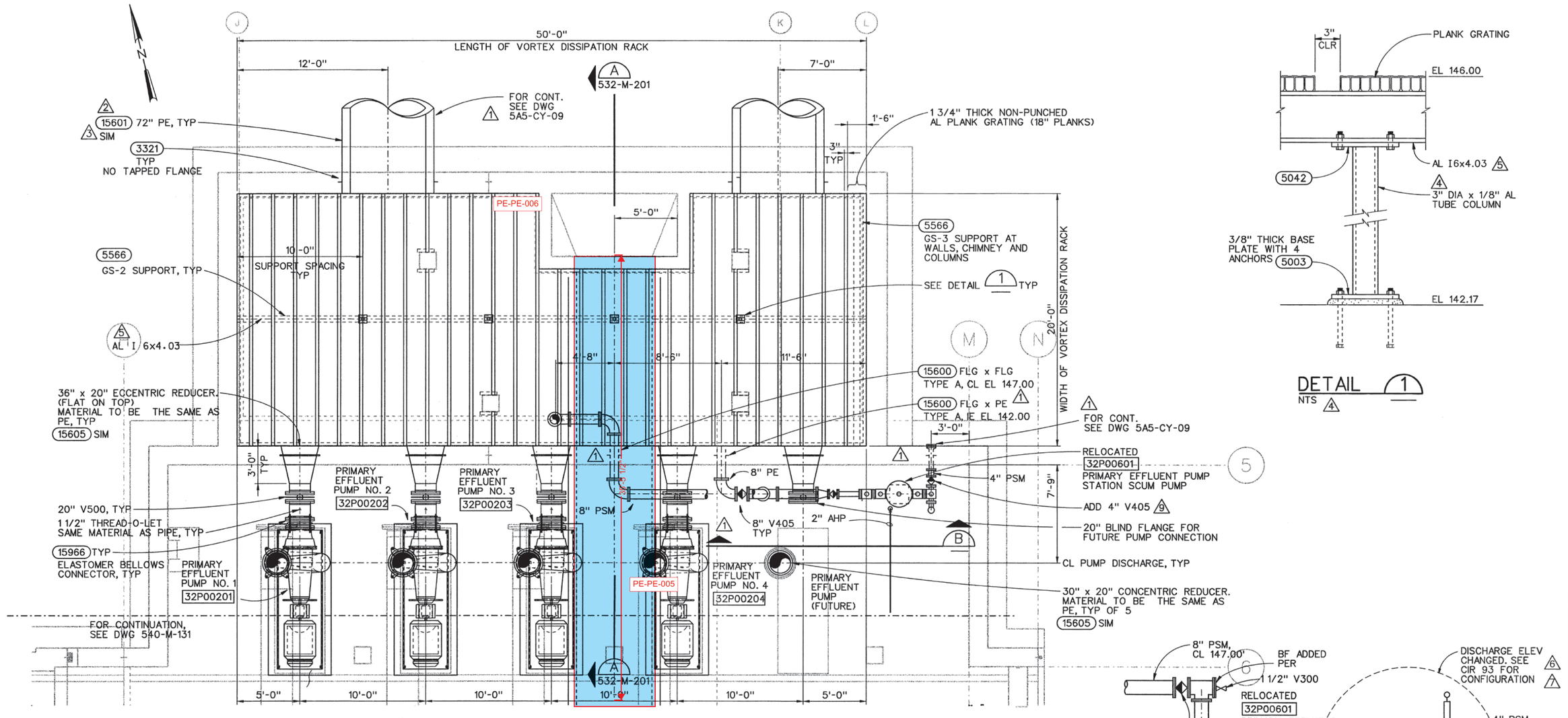

PLAN
1/4"-1'-0"

DETAIL 1
NTS 4

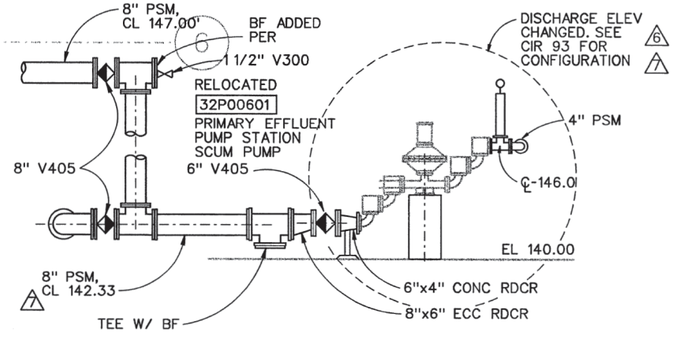

1 SECTION B
3/8"-1'-0"

ADDITIONAL REVISION NOTATIONS

	11/01	RECORD DRAWING	BJM	RBF
9	2/00	CIR NO. 163	RBF	JMP
8	2/00	CIR NO. 154	RBF	JMP
7	2/00	CIR NO. 93.1	RBF	JMP
6	11/99	CIR NO. 93	RBF	JMP
5	9/99	CIR NO. 53	RBF	JMP
4	9/99	CIR NO. 52	AJW	JMP
3	9/99	CIR NO. 45	AJW	JMP
2	4/99	ADDENDUM NO. 5	MSM	RMB
1	3/99	ADDENDUM NO. 3	AGO	AJW

NO. | DATE | REVISION | BY | APVD

RECORD DRAWINGS

Revisions Drawn By K. R. WEIGUM Date 07/25/2001

THESE RECORD DRAWINGS HAVE BEEN PREPARED, IN PART, ON THE BASIS OF INFORMATION COMPILED BY OTHERS. THEY ARE NOT INTENDED TO REPRESENT IN DETAIL THE EXACT LOCATION, TYPE OF COMPONENT NOR MANNER OF CONSTRUCTION. THE ENGINEER WILL NOT BE RESPONSIBLE FOR ANY ERRORS OR OMISSIONS WHICH HAVE BEEN INCORPORATED INTO THE RECORD DRAWINGS.

The Contract Document Drawings are printed documents dated Feb. 1999, as subsequently amended, which define the scope, extent, and character of the work. The original document drawing was sealed & signed by Robert M. Bracken, State of Oregon, P.E. No. 9299, dated July 22, 1977.

DSGN B YOUKER, B FULLER
DR M OBLESKI
CHK K ERICKSON
APVD J GOETZ

VERIFY SCALE
BAR IS ONE INCH ON ORIGINAL DRAWING.
0 1"
IF NOT ONE INCH ON THIS SHEET, ADJUST SCALES ACCORDINGLY.

CH2MHILL

ROCK CREEK FACILITY
EXPANSION - PHASE 5
PACKAGE A

UNIFIED SEWERAGE AGENCY
WASHINGTON COUNTY, OREGON

EAST PRIMARY EFFLUENT PUMP STATION
MECHANICAL
LOWER LEVEL
PLAN

SHEET	89
DWG	532-M-121
DATE	FEB 1999
PROJ	146190

//CVONT1/prj/unified sewerage agency/rock creek phase 5/CAD/drawings/r532m121.dlv PLOT DATE: 04-DEC-2001 PLOT TIME: 15:32:52

REUSE OF DOCUMENTS: THIS DOCUMENT, AND THE IDEAS AND DESIGNS INCORPORATED HEREIN, AS AN INSTRUMENT OF PROFESSIONAL SERVICE, IS THE PROPERTY OF CH2M HILL AND IS NOT TO BE USED, WHOLE OR IN PART, FOR ANY OTHER PROJECT WITHOUT THE WRITTEN AUTHORIZATION OF CH2M HILL. © CH2M HILL

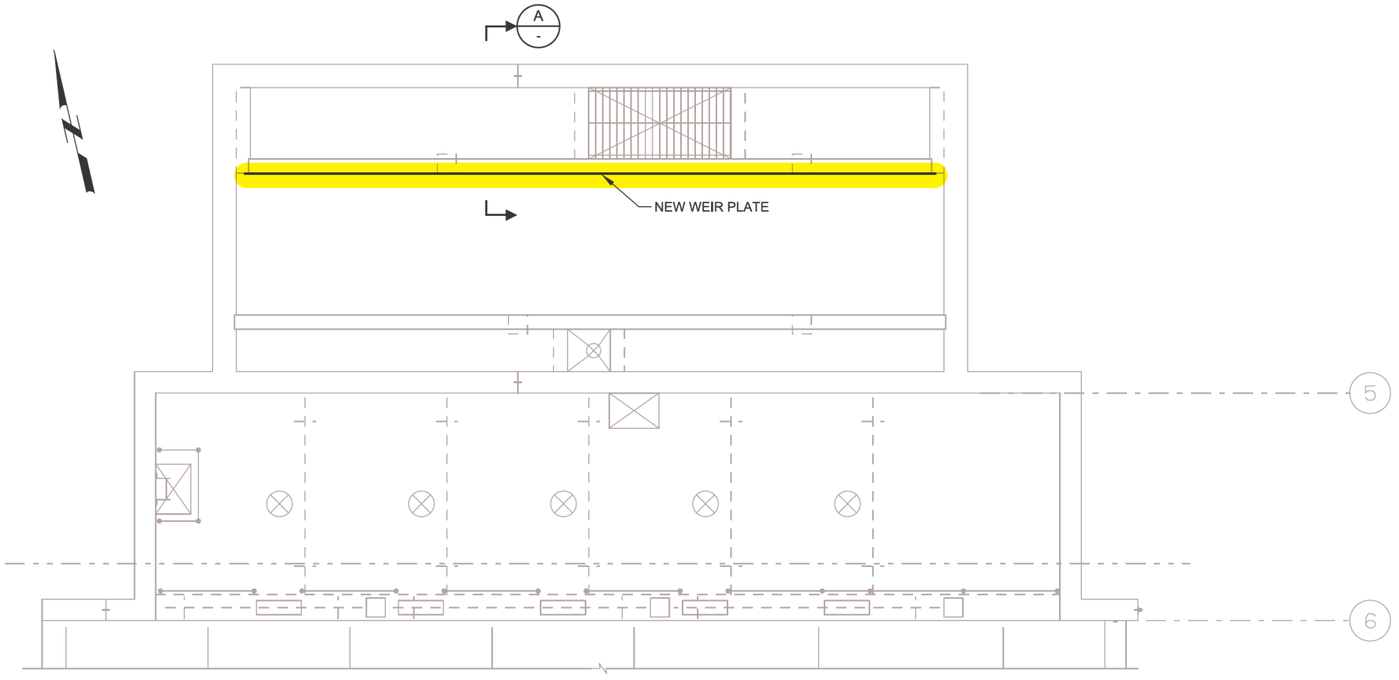

PLAN
SCALE: 3/16" = 1'-0"
FILE: r540sp30

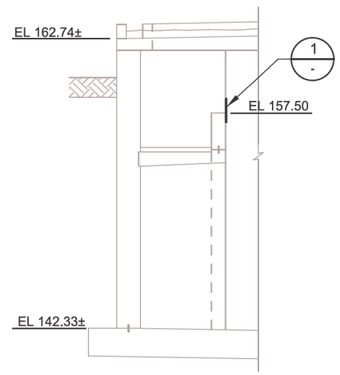

A SECTION
SCALE: 3/16" = 1'-0"
FILE: r532ss03

KEY NOTES:

1. CONTRACTOR SHALL VERIFY BOLT HOLE SIZE AND LOCATION PRIOR TO FABRICATION OF NEW WEIR PLATE.
2. USE EXISTING ANCHOR BOLTS TO FASTEN WEIR PLATE TO CONCRETE WALL.
3. CONTRACTOR SHALL CONFIRM ALL DIMENSIONS PRIOR TO FABRICATION.
4. ACCESS TO WEIR IS SOLELY THROUGH THE ACCESS HATCH WHICH IS APPROX 4' BY 10'. REMOVAL AND REPLACEMENT OF THE WEIR WILL LIKELY BE IN SECTIONS.

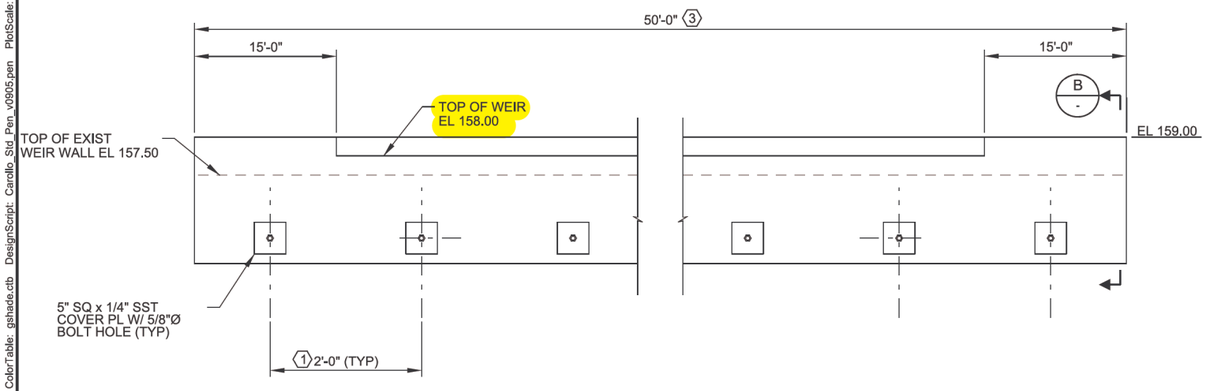

1 WEIR PLATE DETAIL
SCALE: NTS
FILE: 7182E12-320-050-901

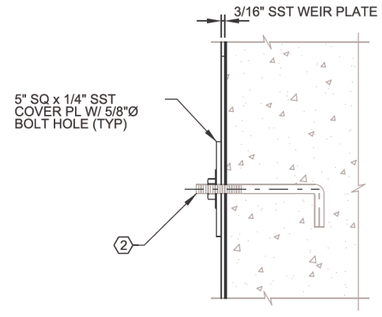

B SECTION
SCALE: NTS
FILE: 7182E12-320-050-901

REV	DATE	BY	DESCRIPTION
			RECORD DRAWING

DESIGNED CFS
DRAWN MJG
CHECKED JFM
DATE FEB 2014

** ORIGINAL STAMPED BY JEFFREY F. McCORMICK FEB 2012 19616PE **

PROJECT ENGINEER

carollo®

CleanWater Services
Our commitment is clear.

CLEAN WATER SERVICES
TERTIARY TREATMENT PROJECT
MECHANICAL
EAST PRIMARY EFFLUENT BYPASS WEIR MODIFICATIONS

VERIFY SCALES
BAR IS ONE INCH ON ORIGINAL DRAWING
0 1"
IF NOT ONE INCH ON THIS SHEET, ADJUST SCALES ACCORDINGLY

JOB NO. 7182E.12
DRAWING NO. 320-M-01
SHEET NO. 38 OF 144

PROJECT NO. 7182E12 FILE NAME: 7182E12-320-M-001.dgn

Plot Date: 12-MAR-2014 2:29:53 PM
User: MGabel
PlotScale: 2:1
DesignScript: Carollo_Std_Pen_v0905.pen
ColorTable: gshade.ctb
Model: Layout1
LAST SAVED BY: mgabel

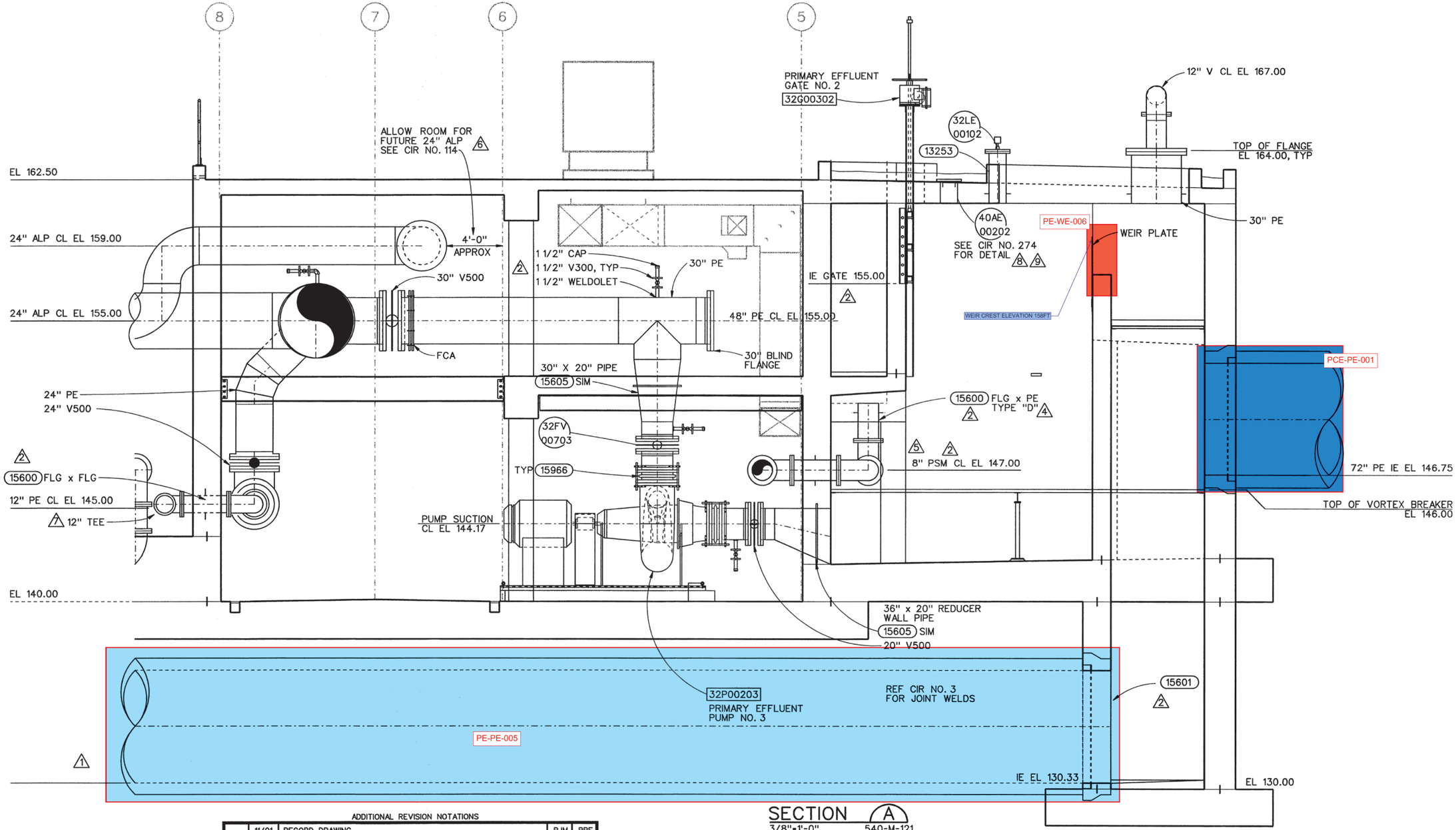

SECTION A
3/8"=1'-0"

540-M-121
532-M-131

ADDITIONAL REVISION NOTATIONS

	11/01	RECORD DRAWING	BJM	RBF
9	09/01	CIR NO. 274	JFM	JMP
8	12/00	CIR NO. 236	RBF	JMP
7	7/99	CIR NO. 201	RBF	JMP
6	11/99	CIR NO. 114	RBF	JMP
5	9/99	CIR NO. 61	AJW	JMP
4	9/99	CIR NO. 46	AJW	JMP
3	6/99	CIR NO. 6	AJW	JMP
2	3/99	ADDENDUM NO. 3	AGO	AJW
1	3/99	ADDENDUM NO. 2	AGO	AJW
NO.	DATE	REVISION	BY	APVD

RECORD DRAWINGS

Revisions Drawn By K. R. WEIGUM Date 07/25/2001

THESE RECORD DRAWINGS HAVE BEEN PREPARED, IN PART, ON THE BASIS OF INFORMATION COMPILED BY OTHERS. THEY ARE NOT INTENDED TO REPRESENT IN DETAIL THE EXACT LOCATION, TYPE OF COMPONENT NOR MANNER OF CONSTRUCTION. THE ENGINEER WILL NOT BE RESPONSIBLE FOR ANY ERRORS OR OMISSIONS WHICH HAVE BEEN INCORPORATED INTO THE RECORD DRAWINGS.

The Contract Document Drawings are printed documents dated Feb. 1999, as subsequently amended, which define the scope, extent, and character of the work. The original document drawing was sealed & signed by Robert M. Bracken, State of Oregon, P.E. No. 9299, dated July 22, 1977.

DSGN B YOUKER, B FULLER
DR M OBLESKI
CHK K ERICKSON
APVD J GOETZ

VERIFY SCALE
BAR IS ONE INCH ON ORIGINAL DRAWING.
0 1"
IF NOT ONE INCH ON THIS SHEET, ADJUST SCALES ACCORDINGLY.

CH2MHILL

ROCK CREEK FACILITY
EXPANSION - PHASE 5
PACKAGE A
UNIFIED SEWERAGE AGENCY
WASHINGTON COUNTY, OREGON

EAST PRIMARY EFFLUENT PUMP STATION
MECHANICAL
SECTION

SHEET	91
DWG	532-M-201
DATE	FEB 1999
PROJ	146190

//CVONT1/prj/unified sewerage agency/rock creek phase 5/CAD/drawings/r532m201.dlv PLOT DATE: 04-DEC-2001 PLOT TIME: 15:59:26

REUSE OF DOCUMENTS: THIS DOCUMENT, AND THE IDEAS AND DESIGNS INCORPORATED HEREIN, AS AN INSTRUMENT OF PROFESSIONAL SERVICE, IS THE PROPERTY OF CH2M HILL AND IS NOT TO BE USED, WHOLE OR IN PART, FOR ANY OTHER PROJECT WITHOUT THE WRITTEN AUTHORIZATION OF CH2M HILL. © CH2M HILL

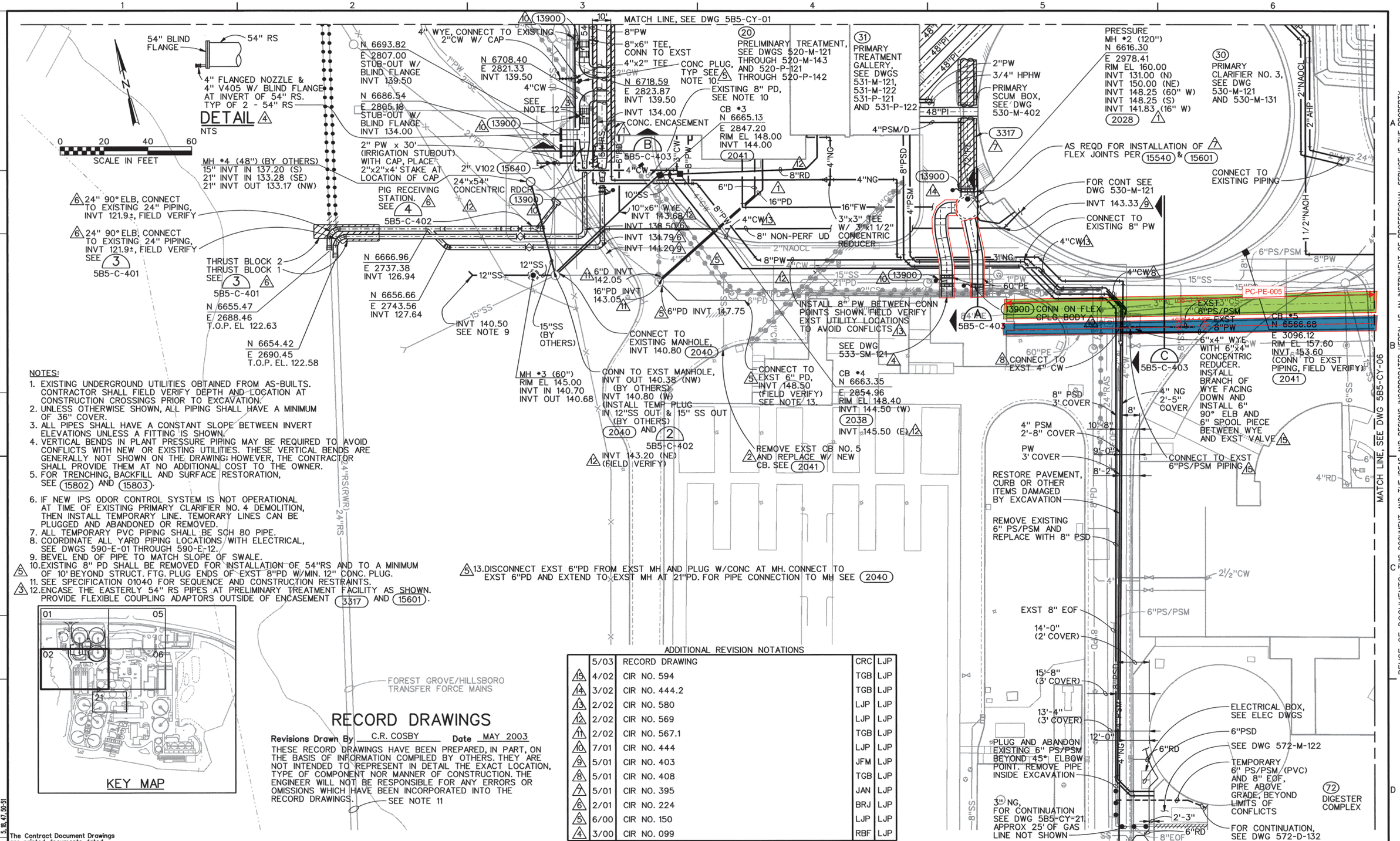

NOTES:

1. EXISTING UNDERGROUND UTILITIES OBTAINED FROM AS-BUILTS. CONTRACTOR SHALL FIELD VERIFY DEPTH AND LOCATION AT CONSTRUCTION CROSSINGS PRIOR TO EXCAVATION.
2. UNLESS OTHERWISE SHOWN, ALL PIPING SHALL HAVE A MINIMUM OF 36" COVER.
3. ALL PIPES SHALL HAVE A CONSTANT SLOPE BETWEEN INVERT ELEVATIONS UNLESS A FITTING IS SHOWN.
4. VERTICAL BENDS IN PLANT PRESSURE PIPING MAY BE REQUIRED TO AVOID CONFLICTS WITH NEW OR EXISTING UTILITIES. THESE VERTICAL BENDS ARE GENERALLY NOT SHOWN ON THE DRAWING; HOWEVER, THE CONTRACTOR SHALL PROVIDE THEM AT NO ADDITIONAL COST TO THE OWNER.
5. FOR TRENCHING, BACKFILL AND SURFACE RESTORATION, SEE (15802) AND (15803).
6. IF NEW IPS ODOR CONTROL SYSTEM IS NOT OPERATIONAL AT TIME OF EXISTING PRIMARY CLARIFIER NO. 4 DEMOLITION, THEN INSTALL TEMPORARY LINE. TEMPORARY LINES CAN BE PLUGGED AND ABANDONED OR REMOVED.
7. ALL TEMPORARY PVC PIPING SHALL BE SCH 80 PIPE.
8. COORDINATE ALL YARD PIPING LOCATIONS WITH ELECTRICAL, SEE DWGS 590-E-01 THROUGH 590-E-12.
9. BEVEL END OF PIPE TO MATCH SLOPE OF SWALE.
10. EXISTING 8" PD SHALL BE REMOVED FOR INSTALLATION OF 54"RS AND TO A MINIMUM OF 10' BEYOND STRUCT. FTG. PLUG ENDS OF EXST 8"PD W/MIN. 12" CONC. PLUG.
11. SEE SPECIFICATION 01040 FOR SEQUENCE AND CONSTRUCTION RESTRAINTS.
12. ENCASE THE EASTERLY 54" RS PIPES AT PRELIMINARY TREATMENT FACILITY AS SHOWN. PROVIDE FLEXIBLE COUPLING ADAPTORS OUTSIDE OF ENCASEMENT (3317) AND (15601).
13. DISCONNECT EXST 6"PD FROM EXST MH AND PLUG W/CONC AT MH. CONNECT TO EXST 6"PD AND EXTEND TO EXST MH AT 21"PD. FOR PIPE CONNECTION TO MH SEE (2040)

RECORD DRAWINGS

Revisions Drawn By C.R. COSBY **Date** MAY 2003

THESE RECORD DRAWINGS HAVE BEEN PREPARED, IN PART, ON THE BASIS OF INFORMATION COMPILED BY OTHERS. THEY ARE NOT INTENDED TO REPRESENT IN DETAIL THE EXACT LOCATION, TYPE OF COMPONENT NOR MANNER OF CONSTRUCTION. THE ENGINEER WILL NOT BE RESPONSIBLE FOR ANY ERRORS OR OMISSIONS WHICH HAVE BEEN INCORPORATED INTO THE RECORD DRAWINGS. SEE NOTE 11

ADDITIONAL REVISION NOTATIONS

	5/03	RECORD DRAWING	CRC	LJP
15	4/02	CIR NO. 594	TGB	LJP
14	3/02	CIR NO. 444.2	TGB	LJP
13	2/02	CIR NO. 580	LJP	LJP
12	2/02	CIR NO. 569	LJP	LJP
11	2/02	CIR NO. 567.1	TGB	LJP
10	7/01	CIR NO. 444	LJP	LJP
9	5/01	CIR NO. 403	JFM	LJP
8	5/01	CIR NO. 408	TGB	LJP
7	5/01	CIR NO. 395	JAN	LJP
6	2/01	CIR NO. 224	BRJ	LJP
5	6/00	CIR NO. 150	LJP	LJP
4	3/00	CIR NO. 099	RBF	LJP

A PROPERTY OF CH2M HILL
© CH2M HILL
REUSE OF DOCUMENTS: THIS DOCUMENT, AND THE IDEAS AND DESIGNS INCORPORATED HEREIN, AS AN INSTRUMENT OF PROFESSIONAL SERVICE, IS THE PROPERTY OF CH2M HILL AND IS NOT TO BE USED, WHOLE OR IN PART, FOR ANY OTHER PROJECT WITHOUT THE WRITTEN AUTHORIZATION OF CH2M HILL.

The Contract Document Drawings are printed documents dated July, 1999, as subsequently amended, which define the scope, extent, and character of the work. The original document drawing was sealed & signed by William B. Wagner, State of Oregon, P.E. No. 10,642, dated July 18, 1980.

DSGN	DR	CHK	APVD
JA NESSL	LG McCALL	WB WAGNER	J GOETZ

NO.	DATE	REVISION	BY	APVD
3	2/00	CIR NO. 055	BAY	LJP
2	1/00	CIR NO. 058	LJP	JMP
1	12/99	CIR NO. 026	AGO	LJP

VERIFY SCALE
BAR IS ONE INCH ON ORIGINAL DRAWING. 0 1"
IF NOT ONE INCH ON THIS SHEET, ADJUST SCALES ACCORDINGLY.

CH2MHILL

ROCK CREEK FACILITY
EXPANSION - PHASE 5
PACKAGE B
UNIFIED SEWERAGE AGENCY
WASHINGTON COUNTY, OREGON

CIVIL
YARD PIPING PLAN

SHEET	46
DWG	5B5-CY-02
DATE	JULY 1999
PROJ	146190

r5r505sep1.mst 2-6, 8, 12-15, 17-19, 21-36, 50-51
r5r505sep.mst 32-36, 46, 61
r5r505cyr1.mst 1, 10, 15-27, 29, 38, 57
r5r505cyr.mst 5, 18, 47, 50-51
r5r505key.mst 2-6, 19, 21, 26, 31, 35-36, 41-42, 45-46, 53
r5r505border.mst 1-2, 48, 60
r5r505opp.mst 32, 34

//CVONT1/prj/unified sewerage agency/rock creek phase 5/CAD/drawings/r5b5cy02.dlv PLOT DATE: 02-JUN-2004 PLOT TIME: 09:14:48

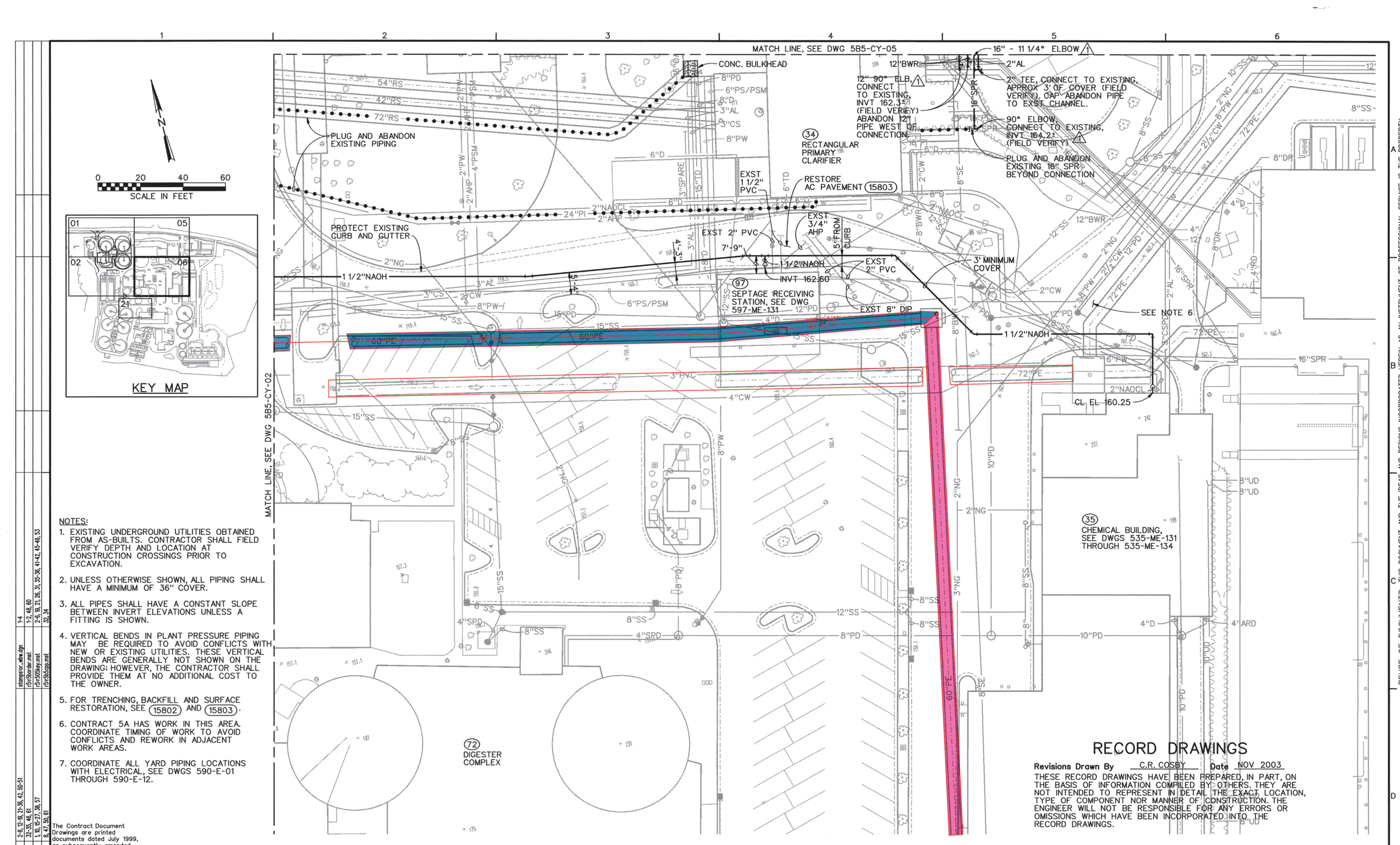

0 20 40 60
SCALE IN FEET

KEY MAP

NOTES:

1. EXISTING UNDERGROUND UTILITIES OBTAINED FROM AS-BUILTS. CONTRACTOR SHALL FIELD VERIFY DEPTH AND LOCATION AT CONSTRUCTION CROSSINGS PRIOR TO EXCAVATION.
2. UNLESS OTHERWISE SHOWN, ALL PIPING SHALL HAVE A MINIMUM OF 36" COVER.
3. ALL PIPES SHALL HAVE A CONSTANT SLOPE BETWEEN INVERT ELEVATIONS UNLESS A FITTING IS SHOWN.
4. VERTICAL BENDS IN PLANT PRESSURE PIPING MAY BE REQUIRED TO AVOID CONFLICTS WITH NEW OR EXISTING UTILITIES. THESE VERTICAL BENDS ARE GENERALLY NOT SHOWN ON THE DRAWING; HOWEVER, THE CONTRACTOR SHALL PROVIDE THEM AT NO ADDITIONAL COST TO THE OWNER.
5. FOR TRENCHING, BACKFILL AND SURFACE RESTORATION, SEE (15802) AND (15803).
6. CONTRACT 5A HAS WORK IN THIS AREA. COORDINATE TIMING OF WORK TO AVOID CONFLICTS AND REWORK IN ADJACENT WORK AREAS.
7. COORDINATE ALL YARD PIPING LOCATIONS WITH ELECTRICAL, SEE DWGS 590-E-01 THROUGH 590-E-12.

RECORD DRAWINGS

Revisions Drawn By C.R. COSBY **Date** NOV 2003

THESE RECORD DRAWINGS HAVE BEEN PREPARED, IN PART, ON THE BASIS OF INFORMATION COMPILED BY OTHERS. THEY ARE NOT INTENDED TO REPRESENT IN DETAIL THE EXACT LOCATION, TYPE OF COMPONENT NOR MANNER OF CONSTRUCTION. THE ENGINEER WILL NOT BE RESPONSIBLE FOR ANY ERRORS OR OMISSIONS WHICH HAVE BEEN INCORPORATED INTO THE RECORD DRAWINGS.

REUSE OF DOCUMENTS: THIS DOCUMENT, AND THE IDEAS AND DESIGNS INCORPORATED HEREIN, AS AN INSTRUMENT OF PROFESSIONAL SERVICE, IS THE PROPERTY OF CH2M HILL AND IS NOT TO BE USED, WHOLE OR IN PART, FOR ANY OTHER PROJECT WITHOUT THE WRITTEN AUTHORIZATION OF CH2M HILL. © CH2M HILL

The Contract Document Drawings are printed documents dated July 1999, as subsequently amended, which define the scope, extent, and character of the work. The original document drawing was sealed & signed by William B. Wagner, State of Oregon, P. E. No. 10642, dated July 18, 1980.

DSGN	JA NESSL
DR	LG McCALL
CHK	WB WAGNER
APVD	J GOETZ

NO.	DATE	REVISION	BY	APVD
1	11/03	RECORD DRAWING	CRC	LJP
2	6/02	CIR NO. 637	TGB	LJP

VERIFY SCALE
BAR IS ONE INCH ON ORIGINAL DRAWING.
0 1"
IF NOT ONE INCH ON THIS SHEET, ADJUST SCALES ACCORDINGLY.

CH2MHILL

ROCK CREEK FACILITY
EXPANSION - PHASE 5
PACKAGE B

UNIFIED SEWERAGE AGENCY
WASHINGTON COUNTY, OREGON

CIVIL

YARD PIPING PLAN

SHEET	48
DWG	5B5-CY-06
DATE	JULY 1999
PROJ	146190

r5r5b5cep1.mst 2-6, 12-19, 21-36, 42, 50-51
r5r5b5cpp.mst 32-35, 46, 61
r5r5b5cey1.mst 1, 10, 15-27, 38, 57
r5r5b5cpy.mst 8, 47, 59, 61
stamp1or...whw.dgn 1-4
r5r5border.mst 1-2, 48, 60
r5r5b5key.mst 2-6, 19, 21, 26, 31, 35-36, 41-42, 45-46, 53
r5r5b5cpp.mst 32, 34

//CVONT1/prj/unified sewerage agency/rock creek phase 5/CAD/drawings/r5b5cy06.dlv PLOT DATE: 02-JUN-2004 PLOT TIME: 09:15:24

2-5-87

SCALE IN FEET 0 40 80

NOTE:
FOR DETAILS OF CURBED ISLANDS SEE GRADING PLANS.

3 SURVEY CONTROL INFORMATION

BENCH MARK NO.	ELEVATION	COORDINATE NORTH	COORDINATE EAST
1	162.70	6394.22	3648.10
2	162.54	6106.83	3575.30
3	162.58	6092.99	3629.81
4	158.42	5979.89	3420.19

PI 25 N6460.87 E3762.42
PI 26 N6512.28 E3731.69
PI 24 N6534.54 E3643.31
N6485.76 E3615.90 SEE DWG 2-S-2
N6334.22 E3648.10 SEE DWG 3-S-1 EL 162.70
N6032.99 E3629.81 SEE DWG 3-S-3 EL 162.58
N6106.83 E3575.30 SEE DWG 3-S-3 EL 162.54
N5873.14 E3577.30
PI 10 N5826.37 E3602.65
N5818.96 E3563.66
N5879.97 E3550.15
N5959.49 E3570.18 SEE DWG 5-S-2
PI 13 N5769.29 E3490.42
N5773.64 E3487.83
PI 8 N5772.10 E3385.20
ROAD ℄ PI N5704.06 E3395.19
PI 16 N5707.64 E3309.31
CC16 N5789.62 E3294.86
N6457.69 E3488.54
PI N6498.66 E3446.31
N6408.37 E3423.58
N6181.45 E3366.44
N5865.84 E3121.68
N6022.05 E3508.07
N5863.98 E3468.27
N5979.89 E3420.19 EL 158.42

BLOWER BUILDING
AERATION BASIN NO. 5
AERATION BASIN NO. 4
℄ SUPPORT COLUMNS
BM-1
BM-2
BM-3
BM-4
N 14°08'E
ELECTRICAL SUBSTATION
EXISTING TREES
4 EXISTING TREES REMOVED
JOIN EXST
SW. RIVER ROAD
5/8" REBAR W/ POST
DITCH
6' FENCE
EXST FENCE
TOP OF BANK
TOE OF SLOPE
STOCKPILE
SOIL STOCKPILE
5'R, TYP
SEE NOTE
8@20'-0" = 160'-0"
4" WHITE PAINTED STRIPES
37' TYP.
5@25'-0" = 125'-0"
26@9'-0" = 234'-0"
EXST TRUCK WASH
EXST 60" PE
PE-PE-015
PE-PE-017
EXST 84"
EXISTING HEADWORKS
PE DIVERSION BOX SEE DWG 1-C-17
SECONDARY CLARIFIER NO. 7
SECONDARY CLARIFIER NO. 8
SECONDARY CLARIFIER NO. 2
SECONDARY CLARIFIER NO. 3
DEWATERING PUMP STATION
UTILITY GALLERY
RAS PUMP STATION
NEW SLUDGE THICKENING BUILDING
STAIRWAY NO. 7
MAINTENANCE BUILDING
FUEL TANK
GAS PUMP
PUMP SHED
SURGE CHAMBER
SURGE CHAMBER
WAS THICKENING & CHEMICAL BUILDING
CONC. PAD SUMP PUMP
BLDG
FILTERS
CHLORINE CONTACT BASINS N5873.17 E2985.06
JOIN CURB AT CORNER, FIELD ADJUST
ADMINISTRATION BLDG
DIGESTER NO. 3
DIGESTER NO. 4
DIGESTER COMPLEX
DIGESTER NO. 1
DIGESTER NO. 2
MATCH LINE, SEE DWG 1-C-9

2 DELETE BACKGROUND REFERENCE FOR GROUND CONTOURS, SOIL STOCKPILE, AND TREE LOCATIONS

E 3800 E 3600 E 3400 E 3200 E 3000
N 6600 N 6400 N 6200 N 6000 N 5800 N 5600

KEY PLAN

RECORD DRAWINGS

Revisions Drawn by I. SCHLABACH Date 1-92

THESE RECORD DRAWINGS HAVE BEEN PREPARED, IN PART, ON THE BASIS OF INFORMATION COMPILED BY OTHERS. THEY ARE NOT INTENDED TO REPRESENT IN DETAIL THE EXACT LOCATION, TYPE OF COMPONENT NOR MANNER OF CONSTRUCTION. THE ENGINEER WILL NOT BE RESPONSIBLE FOR ANY ERRORS OR OMISSIONS WHICH HAVE BEEN INCORPORATED INTO THE RECORD DRAWINGS.

REGISTERED PROFESSIONAL ENGINEER 9299 OREGON July 22, 1977 ROBERT M. BRACKEN

CH2M HILL

DSGN	W. WAGNER
DR	R. BEYER
CHK	J. DORAN
APVD	M. BRACKEN

NO.	DATE	REVISION	BY	APVD
0	5/91	RECORD DRAWING	JBL	PMB
4	2/25/88	CLARIFICATION CL-150	JBL	PMB
3	5/91	CONTROL SET IN 1990	JBL	PMB
2	5-19-87	ADDENDUM NO. 1	JBL	PMB
1	10/88	SLUDGE THICKENING CHANGE ORDER	WBWR	MEBN

REUSE OF DOCUMENTS
THIS DOCUMENT, AND THE IDEAS AND DESIGNS INCORPORATED HEREIN, AS AN INSTRUMENT OF PROFESSIONAL SERVICE, IS THE PROPERTY OF CH2M HILL AND IS NOT TO BE USED, IN WHOLE OR IN PART, FOR ANY OTHER PROJECT WITHOUT THE WRITTEN AUTHORIZATION OF CH2M HILL.
©CH2M HILL

VERIFY SCALES
BAR IS ONE INCH ON ORIGINAL DRAWING. 0 1"
IF NOT ONE INCH ON THIS SHEET, ADJUST SCALES ACCORDINGLY.

ROCK CREEK
ADVANCED WASTEWATER TREATMENT PLANT
UNIFIED SEWERAGE AGENCY
WASHINGTON COUNTY, OREGON

PHASE 1 EXPANSION
SLUDGE THICKENING CHANGE ORDER
CIVIL
SITE LAYOUT PLAN

SHEET	14
DWG NO.	1-C-4
DATE	OCT. 1988
PROJ NO.	P21262.B1

OVERLAY IDENTIFICATION
PROJ NO. P21262.B1
CONTRACT
COMPOSITE RCS-87 1-C-4 RCS-NS
OVERLAY RCS-87 1-C-4 RCS-NS
SCREEN 5
FORMAT 22 x 34 MC
FILM KS
PRINTED 8.5 11
DESIGNED BY 1 2 3
DRAWN BY 1 2 3
CHECKED BY 1 2 3

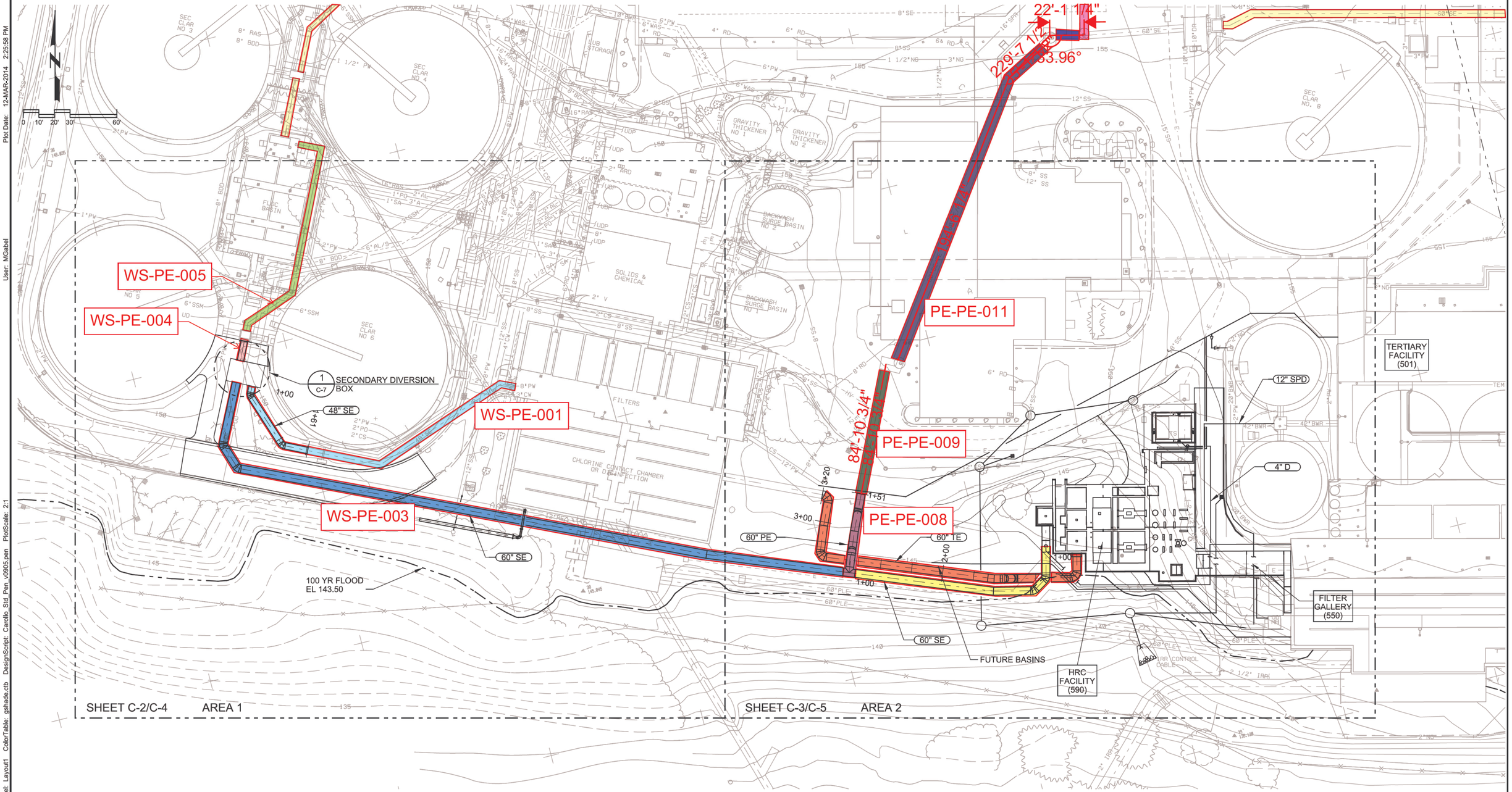

OVERALL SITE PLAN

SCALE: 1" = 30'
FILE: 7182E10-010-101

Plot Date: 12-MAR-2014 2:25:58 PM
User: MGabel
Model: Layout1 ColorTable: gshade.ctb DesignScript: Carollo_Std_Pen_v0905.pen PlotScale: 2:1
LAST SAVED BY: mgabel

REV	DATE	BY	DESCRIPTION
			RECORD DRAWING

DESIGNED RJN
DRAWN MJG
CHECKED DB
DATE FEB 2014

** ORIGINAL STAMPED BY JEFFREY F. McCORMICK FEB 2012 19616PE **

PROJECT ENGINEER

carollo®

CleanWater Services
Our commitment is clear.

CLEAN WATER SERVICES
TERTIARY TREATMENT PROJECT
CIVIL
OVERALL SITE PLAN

VERIFY SCALES
BAR IS ONE INCH ON ORIGINAL DRAWING
0 1"
IF NOT ONE INCH ON THIS SHEET, ADJUST SCALES ACCORDINGLY

JOB NO. 7182E.12
DRAWING NO. C-1
SHEET NO. 22 OF 144

PROJECT NO. 7182E12 FILE NAME: 7182E12-226-C-001.dgn

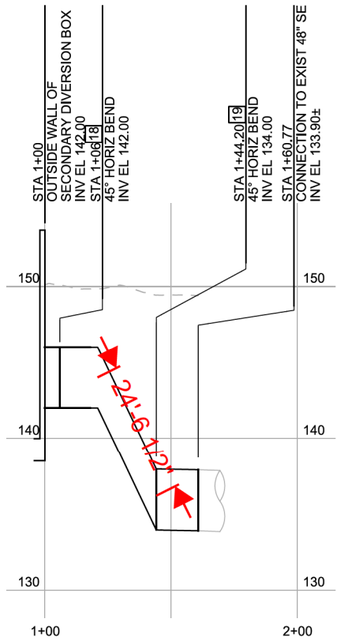

PROFILE A - 48" SE

HORIZ SCALE: 1" = 30'-0"
VERT SCALE: 1" = 5'-0"
FILE: 7182E12-226-010-301

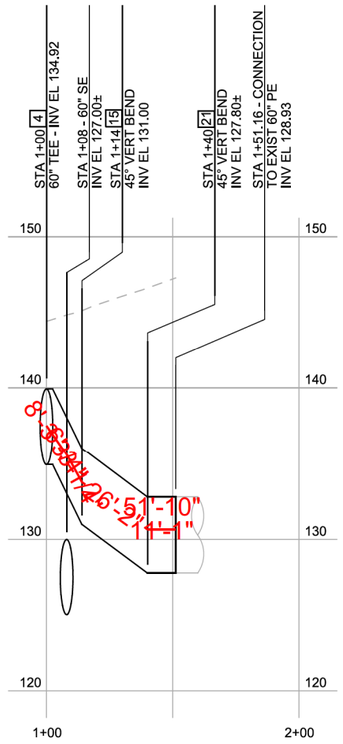

PROFILE B - 60" PE

HORIZ SCALE: 1" = 30'-0"
VERT SCALE: 1" = 5'-0"
FILE: 7182E12-226-010-301

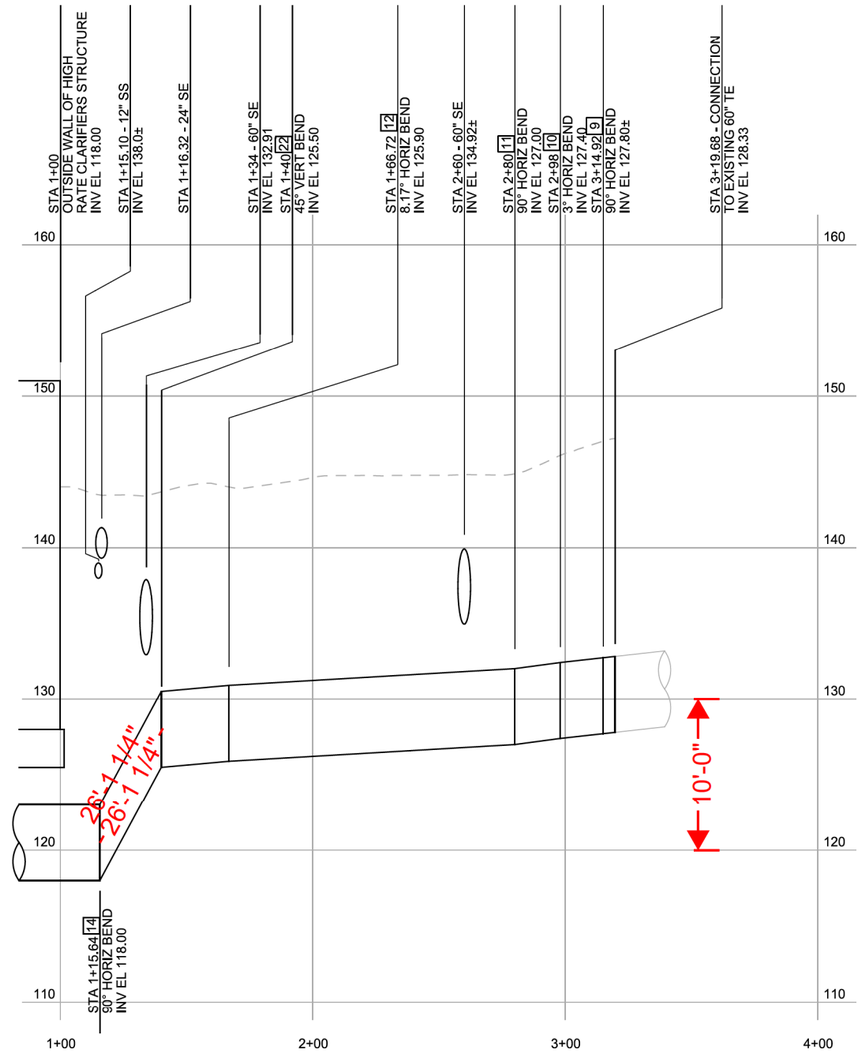

PROFILE C - 60" TE

HORIZ SCALE: 1" = 30'-0"
VERT SCALE: 1" = 5'-0"
FILE: 7182E12-226-010-301

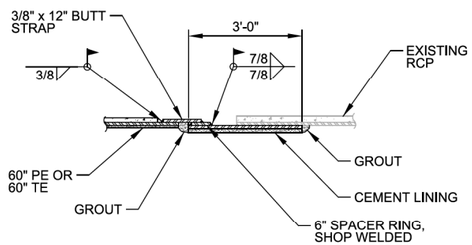

NOTES:
1. ALL EXPOSED STEEL PIPE SHALL BE COATED WITH 16 MILS OF COAL TAR EPOXY.

1 - RCP TO STEEL CONNECTION DETAIL (TYP OF 2)

SCALE: 1/2" = 1'-0"
FILE: 7182E12-226-010-403

REV	DATE	BY	DESCRIPTION
			RECORD DRAWING
			RFI 25, 76, 113

DESIGNED RJN
DRAWN MJG
CHECKED DB
DATE FEB 2014

** ORIGINAL STAMPED BY ROBERT J. NORTON FEB 2012 15286 **

PROJECT ENGINEER

CLEAN WATER SERVICES
TERTIARY TREATMENT PROJECT
CIVIL
PROFILES AND DETAIL

VERIFY SCALES
BAR IS ONE INCH ON ORIGINAL DRAWING
0 1"
IF NOT ONE INCH ON THIS SHEET, ADJUST SCALES ACCORDINGLY

JOB NO. 7182E.12
DRAWING NO. C-11
SHEET NO. 31A OF 144

PROJECT NO. 7182E12 FILE NAME: 7182E12-226-C-011.dgn

Plot Date: 12-MAR-2014 2:27:51 PM
User: MGabel
Model: Layout1 ColorTable: gshade.ctb DesignScript: Carollo_Std_Pen_v0905.pen PlotScale: 2:1
LAST SAVED BY: mgabel